PRINTRONIX®
AUTO ID

Administrator's Manual

T6000e
Thermal Printers

T6X04e / T6X06e Series

Trademarks and Copyright Notice

©2025 TSC Auto ID Technology Co., Ltd.

All trademarks mentioned in this document are the property of their respective owners. TSC is a trademark of TSC Auto ID Technology Co., Ltd., registered in many jurisdictions worldwide. Unauthorized reproduction or use of these trademarks, or any part of this document, is strictly prohibited.

Product Improvements and Updates

TSC Auto ID continuously strives to improve our products. All specifications, features, and designs are subject to change without notice as part of our ongoing product enhancement initiatives. It is recommended to regularly consult the latest documentation to ensure the most up-to-date information is being used. Product users should validate that any new specifications or feature updates for compatibility with their existing applications before implementation.

Proprietary Information and Confidentiality

This manual contains proprietary information of TSC Auto ID Technology Co., Ltd. (TSC), which is intended solely for the use of parties operating and maintaining the equipment described herein. Such proprietary information must not be used, reproduced, or disclosed to any third party for any purpose without the express written permission of TSC.

Disclaimer

While TSC Auto ID makes every effort to ensure the accuracy of the information contained in our specifications and manuals, errors may still occur. TSC Auto ID reserves the right to correct any errors, and disclaims any liability caused by such errors. The information provided in this document is for reference only and does not constitute a guarantee of performance or suitability for any particular application.

Limitation of Liability

TSC Auto ID is not responsible for any direct, indirect, incidental, or consequential damages arising from the use, inability to use, or performance of our products. This includes, but is not limited to, business losses, interruptions, or the loss of business data, even if TSC was advised of the possibility of such damages.

Some jurisdictions may not permit the exclusion of incidental or consequential damages, so the limitations and exclusions outlined here may not apply to you.

User Responsibility

It is the responsibility of the user to comply with all relevant laws and licensing agreements when using this document and the associated products. TSC Auto ID disclaims responsibility for any consequences arising from improper usage or unauthorized modifications to the products.

Security and System Integrity

TSC Auto ID is not responsible for security vulnerabilities introduced through third-party software, unauthorized file uploads, or improper system configurations via any access path. Users are responsible for implementing appropriate security measures to prevent potential risks. TSC Auto ID is not liable for any malfunctions, disruptions, or security issues resulting from such actions.

Trademark Acknowledgements

Printronix, IGP, Auto Label Mapping, LinePrinter Plus, PGL, and PrintNet are registered trademarks of Printronix, Inc.

T8 and T6 are trademarks of Printronix Auto ID Technology, Inc.

Artifex, the Artifex logo , Ghostscript, and the Ghostscript logo are registered trademarks of Artifex Software, Inc.

PostScript is a trademark of Adobe Systems Incorporated.

HP is a registered trademark of Hewlett-Packard Company.

Code V is a trademark of QMS, Inc.

QMS is a registered trademark of Quality Micro Systems, Inc.

IBM is registered trademark of International Business Machines Corp.

MS-DOS and Windows are registered trademarks of Microsoft Corporation.

Centronics is a registered trademark of Genicom Corporation.

IEEE is a registered service mark of the Institute of Electrical and Electronic Engineers, Inc.

EIA is a registered service mark of Electronic Industries Association.

ZPL, ZPL II, and Zebra are registered trademarks of Zebra Technologies Corporation.

TEC is a registered trademark of the Toshiba TEC Corporation.

Intermec is a registered trademark of the Intermec Technologies Corporation.

SATO is a registered trademark of SATO America, Inc.

DPL is a trademark and Datamax is a registered trademark of Datamax Technologies Corporation.

IER is a registered trademark of IER Siège

Monarch is a registered trademark of Paxar Corporation.

SD, SDHC and SDXC are trademarks or registered trademarks of SD-3C, LLC in the United States, other countries or both. Also, miniSD, microSD, miniSDHC, microSDHC, microSDXC, smartSD, smartSDHC, SDIO and miniSDIO are all trademarks or registered trademarks of SD-3C, LLC in the United States, other countries or both.

Regulatory Compliance

	EN 55032, Class A EN 55024 EN 62368-1 This is a class A product. In a domestic environment this product may cause radio interference in which case the user may be required to take adequate measures.
	FCC part 15B, Class A ICES-003, Class A This equipment has been tested and found to comply with the limits for a Class A digital device, pursuant to Part 15 of the FCC Rules. These limits are designed to provide reasonable protection against harmful interference when the equipment is operated in a commercial environment. This equipment generates, uses, and can radiate radio frequency energy and, if not installed and used in accordance with the manufacturer's instruction manual, may cause harmful interference with radio communications. Operation of this equipment in a residential area is likely to cause harmful interference, in which case you will be required to correct the interference at your own expense. This Class A digital apparatus complies with Canadian ICES-003. Cet appareil numérique de la classe A est conform à la norme NMB-003 du Canada. This device complies with Part 15 of the FCC Rules. Operation is subject to the following two conditions: (1) This device may cause harmful interference, and (2) this device must accept any interference received, including interference that may cause undesired operation.
	AS/NZS CISPR 32, Class A Warning: This equipment is compliant with Class A of CISPR 32. In a residential environment this equipment may cause radio interference.
	K 60950-1, KN 32 / KN 35 이 기기는 업무용(A 급) 전자파적합기기로서 판매자 또는 사용자는 이 점을 주의하시기 바라며, 가정외의 지역에서 사용하는 것을 목적으로 합니다.
	GB 4943.1 GB T9254, Class A GB 17625.1 此为 A 级产品，在生活环境中，该产品可能会造成无线电干扰， 在这种情况下，可能需要用户对干扰采取切实可行的措施。
	Energy Star for Imaging Equipment Version 3.0 The menu setting *System* > *Energy Star* > *Pwr Saver Time* is default 5 minutes and can be modified by user if desired.
	IS 13252(Part 1)/ IEC 60950-1

	UL 60950-1 / 62368-1 CAN/CSA-C22.2 No. 60950-1 / No. 628368-1
Mexico CoC	UL 60950-1
	IEC 62368-1
	TP TC 004 TP TC 020
	CNS 13438 CNS 14336-1 CNS 15663 警告使用者：此為甲類資訊技術設備，於居住環境中使用時，可能會造成射頻擾動，在此種況下，使用者會被要求採取某些適當的對策。
NBTC	 **Class A** **NBTC ID. A56012-19-1903** **เครื่องโทรคมนาคมและอุปกรณ์นี้มีความสอดคล้องตามมาตรฐานหรือข้อกำหนดทางเทคนิคของ กสทช.**

Important Safety Instructions

1. Read all of these instructions and keep them for later use.
2. Follow all warnings and instructions on the product.
3. Disconnect the power cord from the AC source before cleaning. Do not use liquid or aerosol cleaners. Using a damp cloth is suitable for cleaning.
4. The mains socket shall be installed near the equipment and easily accessible.
5. The unit must be protected against moisture.

6. Ensure the stability when installing the device, Tipping or dropping could cause damage.
7. Make sure to follow the correct power rating and power type indicated on marking label provided by manufacturer.
8. Please refer to user manual for maximum operation ambient temperature.

WARNING:

Moving parts; Keep fingers and other body parts clear.

CAUTION: (For equipment with Real Time Clock or rechargeable battery pack)
Risk of explosion if Real Time Clock battery is replaced by an incorrect type. Dispose of used batteries according to the Instructions as below.

- DO NOT throw the battery in fire.
- DO NOT short circuit the contacts.
- DO NOT disassemble the battery.
- DO NOT throw the battery in municipal waste.
- The symbol of the crossed out wheeled bin indicates that the battery should not be placed in municipal waste.

Caution: Hot surface on printhead! Allow printhead to cool before removal.

WARNING:
Remove the power cord from AC inlet before opening the media cover for cleaning the printer or correcting faults. After cleaning or fixing faults, close the media cover before restoring power to the printer.

CAUTION:
Any changes or modifications to the equipment not expressly approved by Printronix Auto ID or an authorized designate could void the user's authority to operate the equipment.

Below statement are for product with optional RF function.

CE Statement:
This equipment complies with EU radiation exposure limits set forth for an uncontrolled environment. This equipment should be installed and operated with minimum distance 20 cm between the radiator & your body.

All operational modes:
2.4GHz: 802.11b, 802.11g, 802.11n (HT20), 802.11n (HT40)
5GHz: 802.11a, 802.11ac.

The frequency, mode and the maximum transmitted power in EU are listed below:
2400 MHz – 2483.5 MHz: 18.30 dBm (EIRP)(Wi-Fi)
5150 MHz – 5250 MHz: 19.12 dBm (EIRP)(Wi-Fi)
2402 MHz – 2480 MHz: 6.02 dBm (EIRP)(Bluetooth)

Requirements in
AT/BE/BG/CZ/DK/EE/FR/DE/IS/IE/IT/EL/ES/CY/LV/LI/LT/LU/HU/MT/NL/NO/PL/PT/RO/SI/SK/TR/FI/SE/CH/UK/HR. 5150MHz~5350MHz is for indoor use only.

5150-5350MHz for Only indoor use
5470-5725MHz for indoor/outdoor use

Restrictions In AZE
National restrictions information is provided below

Frequency Band	Country	Remark
5150-5350MHz	**Azerbaijan**	**No license needed if used indoor and power not exceeding 30mW**
5470-5725MHz		

Hereby, PRINTRONIX Auto ID Technology Co., Ltd. declares that the radio equipment type [Wi-Fi] IEEE 802.11 a/b/g/n/ac is in compliance with Directive 2014/53/EU
The full text of the EU declaration of conformity is available on our company's website.

Canada, Industry Canada (IC) Notices
This Class B digital apparatus complies with Canadian ICES-003 and RSS-210.
Operation is subject to the following two conditions: (1) this device may not cause interference, and (2) this device must accept any interference, including interference that may cause undesired operation of the device.

Canada, avis de l'Industry Canada (IC)
Cet appareil numérique de classe B est conforme aux normes canadiennes ICES-003 et RSS-210.
Son fonctionnement est soumis aux deux conditions suivantes : (1) cet appareil ne doit pas causer d'interférence et (2) cet appareil doit accepter toute interférence, notamment les interférences qui peuvent affecter son fonctionnement.

NCC 警語:
經型式認證合格之低功率射頻電機，非經許可，公司、商號或使用者均不得擅自變更頻率、加大功率或變更原設計之特性及功能。(即低功率電波輻射性電機管理辦法第十二條)
低功率射頻電機之使用不得影響飛航安全及干擾合法通信；經發現有干擾現象時，應立即停用，並改善至無干擾時方得繼續使用。
前項合法通信，指依電信法規定作業之無線電通信。低功率射頻電機須忍受合法通信或工業、科學及醫療用電波輻射性電機設備之干擾。(即低功率電波輻射性電機管理辦法第十四條)
BSMI Class A 警語:
這是甲類的資訊產品，在居住的環境使用中時，可能會造成射頻干擾，在這種情況下，使用者會被要求採取某些適當的對策。

單元 Unit	限用物質及其化學符號 Restricted substances and its chemical symbols					
	鉛Lead (Pb)	汞Mercury (Hg)	鎘Cadmium (Cd)	六價鉻 Hexavalent chromium (Cr^{+6})	多溴聯苯 Polybrominated biphenyls (PBB)	多溴二苯醚 Polybrominated diphenyl ethers (PBDE)
內外塑膠件	○	○	○	○	○	○
內外鐵件	-	○	○	○	○	○
滾輪	○	○	○	○	○	○
銘版	○	○	○	○	○	○
電路板	-	○	○	○	○	○
晶片電阻	-	○	○	○	○	○
積層陶瓷表面黏著電容	○	○	○	○	○	○
集成電路-IC	-	○	○	○	○	○

電源供應器	○	○	○	○	○	○
印字頭	-	○	○	○	○	○
馬達	-	○	○	○	○	○
液晶顯示器	-	○	○	○	○	○
插座	-	○	○	○	○	○
線材	-	○	○	○	○	○

備考 1.〝超出 0.1 wt %〞及〝超出 0.01 wt %〞係指限用物質之百分比含量超出百分比含量基準值。
Note 1：“Exceeding 0.1 wt %” and “exceeding 0.01 wt %” indicate that the percentage content of the restricted substance exceeds the reference percentage value of presence condition.

備考 2.〝○〞係指該項限用物質之百分比含量未超出百分比含量基準值。
Note 2：“○” indicates that the percentage content of the restricted substance does not exceed the percentage of reference value of presence.

備考 3.〝－〞係指該項限用物質為排除項目。
Note 3：The “–” indicates that the restricted substance corresponds to the exemption.

Disposal

Printer products disposed of should not be mixed with general household waste. Customer had the option to either dispose of the product at a proper local waste disposal/dismantle/recycle centre or to return such printer products to our plant in The Netherlands (Shipping cost at Customer’s expense) by requesting a CRA (Customer Return Authorization) number from our Order Administration department. Please contact them by email at EMEA_Support@printronixautoid.com for further questions or details.

Important safety instructions

1. Read all of these instructions and keep them for later use.
2. Follow all warnings and instructions on the product.
3. Disconnect the power plug from the AC outlet before cleaning or if any fault happens.
4. Do not use liquid or aerosol cleaners. Using a damp cloth is suitable for cleaning.
5. The mains socket shall be installed near the equipment and easily accessible.
6. The unit must be protected against moisture.
7. Ensure the stability when installing the device, Tipping or dropping could cause damage.
8. Make sure to follow the correct power rating and power type indicated on marking label provided by manufacturer.
9. Please refer to user manual for maximum operation ambient temperature.

Warnings and Special Information

For your safety and to protect valuable equipment, read and comply with all information highlighted under special headings:

WARNING **Conditions that could harm you and damage the equipment.**

CAUTION **Conditions that could damage the printer or related equipment.**

IMPORTANT **Information vital to proper operation of the printer.**

NOTE: Information and helpful tips about printer operation.

Manual Conventions

- Operator panel keys are printed in uppercase letters.

Example: Press the PAUSE key and then press ENTER.

- Operator panel keys are often shown by their symbol or icon (located on the control panel directly below the key).

Example: Press the ↵ key for ENTER.

- Operator panel menu settings are often shown by their full location that includes the ICON name, submenu, and then menu, each separated with a ‘>’ sign.

Example: Change the *Media* > *Image* > *Label Length* menu.

- Control panel LCD messages are printed in uppercase letters inside quotation marks (“ ”).

Example: When “OFFLINE” appears on the control panel LCD, you may release the PAUSE key.

- Key combinations are indicated by the **+** (plus) symbol.

Example: Press ↑ + ↓ means *Press the Up ↑ key and the Down ↓ key at the same time.*

Table of Contents

Trademark Acknowledgements 3
Regulatory Compliance 4
Important Safety Instructions 5
Disposal 8
Important safety instructions 8
Warnings and Special Information 8
Manual Conventions 8
Table of Contents 10

1 Introduction 19
The T6000e Family of Printers 19
Standard Features 20
Optional Features 21
Thermal Printer Technology 23
The Printing Process 23
Dynamic Print Control 23

2 Operation 24
Controls and Indicators 24
Power Switch 24
Control Panel 24
Operating Modes 25
Online Screen 26
Offline (Home) Screen 27
Wizard 27
Settings 28
Calibration 29
Fault 30
Job in Process 30
Media Handling Modes 31
Setting Up the Printer 31
Loading Ribbon 32
Remove Used Ribbon 33
Loading Media 34
Label Peel-Off 38
Configuring the Printer Menu 38

Loading Media Using Peel-Off Mode 38
Removing Label Liner from the Rewinder 39
Printing Adjustments 41
Printhead Pressure Adjustment 41
Ribbon Tension Adjustment Screw 41
Printhead Burn Line Adjustment Screws 41
Z-axis Mechanism Adjustment Screw 42
Ribbon Tension Adjustment Knob (V3 only) 42
Mechanism Fine Adjustment to Avoid Ribbon Wrinkles 43
Positioning the Media Sensors 45
Media with Horizontal Black Marks 46
Media with No Label Length Indicators 46
Media with Gaps, Notches, or Holes (Gap Option) 47
Sensing Different Media Types 47
Calibrating the Media Sensors 47
Running Auto Calibrate 48
Running Media Profile 49
Gap Sensing 50
Running Manual Calibrate 52
Calibrating RFID Media (Auto-Calibrate) 52
Cleaning 53
Exterior Cleaning 53
Interior Cleaning 53
Cleaning the Printhead, Platen Roller, Media Sensors/Damper 53
Printhead Cleaning 53
Media Sensor Cleaning 54
Media Damper Cleaning 55
Cutter Option Cleaning 55
3 Configurations 56
Overview 56
Setting Printer Configuration Parameters 56
Saving a Configuration 58
Auto Save Configuration 59
Naming Configurations 59
Loading a Configuration 60
Specifying a Power-Up Configuration 60
Modifying a Saved Configuration 60
Viewing the Current Configuration 60
Printing a Configuration 61

Settings Organization 62
Quick Setup 63
Menu Items 63
Entering Safe Mode 64
Exiting Safe Mode 65
Forgot the Password 65
Media 65
Intro: Label Length 65
Intro: Clip Page 66
Media > Image 67
Media > Speed 73
Media > Handling 74
Media > Ribbon 78
Media > TOF 79
Media > Fault 81
Media > Auto Label Map 82
Auto Label Map Examples 83
Example 1: Simple Case 83
Example 2: Uneven Number Case 84
Example 3: Past Maximum File Width 85
Example 4: Blank Label Case 85
Sensors 86
Intro: Sensor Types 86
Sensors > Control 86
Sensors > Calibrate 88
Sensors > Diagnostics 94
System 96
System > Control 96
System > Energy Star 100
System > Flash File View 100
System > Flash File Edit 100
System > SD File View 102
System > SD File Edit 102
System > USB File View 120
System > USB File Edit 120

System > Printer Mgmt 121
System > Date 125
System > GPIO 126

Application 127
LP+, PGL, VGL Character Sets 127
Application > Control 131
Application > IPDS Setup 137
Application > TN 5250 Setup 143
Application > PS/PDF 149
Application > PGL Setup 150
Application > VGL Setup 160
Application > ZGL SETUP 173
Application > TGL SETUP 173
Application > IGL SETUP 173
Application > STGL SETUP 173
Application > DGL SETUP 173
Application > IEGL SETUP 173
Application > MGL SETUP 173
Application > LP+ SETUP 173
Application > P-SERIES Setup 179
Application > P-SERIES XQ Setup 185
Application > Serial Matrix Setup 188
Application > Proprinter Setup 193
Application > Epson FX Setup 196
Application > Fonts 201

Host IO 203
Host IO > Control 203
Host IO > Centronics 204
Host IO > IEEE-1284 208
Host IO > USB 209
Host IO > Serial 209
Host IO > Host USB 217

Network 218
Network > Control 218
Network > Ethernet 220
Network > WLAN 224
Network > WLAN Params 226
Network > WLAN EAP 232

Configs 233
Configs > Control 233
Configs > Custom 235
Tools 236
Tools > Print Tests 236
Tools > Diagnostics 238
Tools > Advanced 239
Tools > PTF Debug 241
Tools > PTF Flags 242
Tools > Statistics 243
Tools > About 244
Validator 246
RFID 247
4 Downloading Firmware 248
Firmware File Types (.prg) and (.exe) 249
Web Page Download 250
Automatic Download (.exe) 252
Manual Two-Key Download Sequence 254
Manual Three-Key Download Sequence 254
Sending Firmware in Download Mode 254
Sending Firmware via Ethernet (LPR) 255
Sending Firmware via USB 255
Sending Firmware via Parallel 256
Downloading Files to the Main File System 257
Filename Extensions Not Shown in Menus 257
File Properties Not Shown in Menus 259
Web Page Download 259
PTX_SETUP Download 261
Manual Two-Key Download 261
Downloading Files to the SD Card 262
Using TrueType Fonts 262
Downloading TrueType Fonts 262
PGL Emulation 263
Manual Two-Key Download 263
Labeling Applications 263
Select and Print Downloaded TrueType Fonts 263
To Print ASCII Characters 263

To Print All Characters 263
Demo Facility 264
Downloading a Demo File 264
Configuring the Printer to Run a Demo File 265
Starting a Demo File 265
Pausing a Demo File 265
Stopping a Demo File 265
Deleting a Demo File 265
WLAN Radio Firmware Upgrade 265
Firmware Download Methods 265

5 Reprogramming the Security Key 267
Reprogramming the Security Key 267
How to Program the Security Key 267

6 Diagnostics and Troubleshooting 269
Printer Tests 269
Troubleshooting Common Situations 269
Interfacing 269
Hex Dump Mode 269
Controlling Print Quality 270
Replacing the Printhead 272
Restore the Printer to Operation 273
Diagnostics for Fatal Error: 274
Solving other Printer Problems 275
Printer Alarms 283
Fault Messages 283
Operator-Correctable Fault Messages 283
Fault Messages Requiring Field Service Attention 283
Fatal Messages Requiring Firmware Upgrade or Diagnostics 283

A Specifications 298
Print Method 298
Media 300
Ribbon 302
Indicators and Switches 302
Memory 304
Media Cutter Option 304
Host Interfaces 305
Power 305
Environmental 305
Physical 306
Acoustic Specifications 306

B Printer Options 307
Media Handling Accessories 307
Media Cutter 307
Peel Dispenser 307
Internal label batch rewinder 307
Media Cutter Tray 307
Hardware Options 307
Online Data Validator 307
RFID 307
Interface Options 307
Wireless NIC (802.11 a/b/g/n wireless) 307
General Purpose Input/Output (GPIO) 308
Parallel (Centronics or IEEE-1284) 308
Software Options 308
IPDS over Ethernet 308
Telnet 308
Postscript/PDF 308
Premium Asian Fonts 308
Andalé Fonts 308
Quick Change Memory Cartridge 308
Supplies 308
Manuals 309

C Media Cutter Installation 310
4 Inch Printer Media Cutter Installation 310
Preparing the Printer 310
Installing the 4 Inch Media Cutter 311
Restoring the Printer to Operation 312
Removing the 4 Inch Media Cutter 312
6 Inch Printer Media Cutter Installation 313
Preparing the Printer 313
Installing the 6 Inch Media Cutter 313
Installing the 6 Inch Cutter Tray (or Bin) 315
Restoring the Printer to Operation 315
Removing the 6 Inch Media Cutter 316

D Loading WLAN Certificates 317
Overview 317
WiFi Certificates 317
SOTI Certificates 317
802.1x Certificates 317
WiFi Certificates 318
Windows Procedure 318

Linux Procedure 318
Webpage Procedure 319
SOTI Certificates: Create the Download File 321
802.1x Certificates: Create the Download File 322

E PTX_SETUP Commands 323
Overview 323
Command Format 323
CONFIG Commands 324
Configuration Upload / Download 326
INFO Return Status 326
GETMENU Command and Return Data 327
FILE_IO Commands 327
ENGINE Commands 329
RFID Commands 331
ODV-2D Commands 333
Misc Commands 335
LP MODE Commands 335
NIC_SETUP Commands 335
GPIO Commands 336
PRINTJOB Commands 336

F Quick Change Memory Card (QCMC) 337
Overview 337
Installing the QCMC 338
Saving the Printer's Configuration to the QCMC 338
Copying the QCMC "Snapshot" Image to a Second Printer 340
Updating the QCMC Image 342
Erasing the QCMC Image 342

G Custom Configuration Module (CCM) 344
Overview 344
Creating a CCM Package 344
Configuring Printers 345
Printer Firmware Compatibility 346
CCM Content Description 347
Program File and Feature File 347
CST and GPIO Files 347
Fonts and File System 347
Network Config File 347
Emulation Setup 348
PTX-SETUP Printer Config 348

H Customer Support 349

Printronix Auto ID Customer Support Center 349
Corporate Offices 350

I Glossary 351

J Communication Notices and Warranties 356

Communication Statements 357
European Union Conformity 358
Industry Canada Compliance Statement 358
Statement of CISPR 32 Compliance 358
German Conformity Statement 359
Korea 359
China 360
Software License Agreement 361
eCos 362
Open SSL 363
OpenSSL License 363
Original SSLeay License 364
WPA Supplicant License 365
Brian Gladman AES Library 365
Artifex Portions Software Copyright Notices 366
Google Font Open Sans 366
Cousine Font 366
ZINT Software 367
Limited Software Product Warranty 367
Remedy 367
Disclaimer of Warranties and Limitation of Remedies 367
Termination of License Agreement 368
U.S. Government Restricted Rights 368
Acknowledgement of Terms and Conditions 368
Product Warranty Information 368

1 *Introduction*

The T6000e Family of Printers

NOTE: As used in this manual, the terms “T6000e” and “printer” refer to all models within the series.

The T6000e series consists of a family of high quality, mid-range direct thermal and thermal transfer printers specifically designed for printing labels and tags from multiple environments:

- MS-DOS®
- Windows®
- Unix/Linux
- EBCDIC (with the TN firmware or IPDS option)
- SAP/ERP (with the Postscript/PDF firmware or Standard firmware with SAP device type)

The T6000e series are comprised of the products detailed in *Table 1*.

Table 1. The T6000e Series

Regulatory Model No.	T6000e	Max Print Speed (ips)	Print Resolution (dpi)	Max Print Width (in)
Version	**Model No.**			
Standard	T6204e	14	203	4.1
w/ RFID	T62R4e			
Standard	T6304e	12	300	4.1
w/ RFID	T63R4e			
Standard	T6604e	6	600	4.1
w/ RFID	T66R4e			
Standard	T6206e	12	203	6.5
w/ RFID	T62R6e			
Standard	T6306e	10	300	6.5
w/ RFID	T63R6e			

Standard Features

- **512MB DRAM memory** (fixed).
- **256MB Flash memory** (fixed).
- **Auto Label Mapping**®: For compatibility with programs written for Printronix line matrix printers.
- **Bar Codes:** Supports multiple types of 1-D and 2-D bar codes.
- **Download:** Fonts, forms, and graphics to printer memory.
- **Emulations:**
  - Printronix LinePrinter Plus® (LP+). Provides direct compatibility with Printronix P-Series printers, Epson FX-1050, Proprinter IIIXL, and Serial Matrix Printers.
  - Printronix PGL®. Provides printer system commands for text, barcodes, graphics, lines, and boxes.
  - Printronix VGL. Emulates the QMS Code V™ Version II programming language to produce on-line forms, bar codes, and alphanumeric text generation in both normal and high resolution.
  - ZGL interpreter for legacy ZPL (Zebra®) applications
  - TGL interpreter for legacy TEC (TEC®) applications
  - IGL interpreter for legacy IPL (Intermec®) applications
  - STGL interpreter for legacy SPL (SATO®) applications
  - DGL interpreter for legacy DPL™ (Datamax®) applications
  - IEGL interpreter for legacy IER-520® (IER®) applications
  - MGL interpreter for legacy MPCL II® (Monarch®) applications
  - EGL interpreter for legacy Eltron® applications
- **High Resolution Printhead:** 203, 300 and 600 dpi (4”), 203, 300 dpi (6”) for sharp graphics and text. Interchangeable.
- **Network Interface Port:** This interface allows you to attach the printer to a LAN (Local Area Network). The port is visible on the back panel. The Ethernet port is a 10/100Base and supports data transfer rates up to 100 Mbps. The PrintNet Enterprise Suite (PNE) remote management software can be downloaded at no cost from our company’s website.
- **Real Time Clock (RTC)**: The RTC has an internal battery. The clock keeps track of the year, month, day, hour, minute and second values. It will continue to operate when the printer is off. Graphic languages can use the RTC values to program fields in labels to indicate the date and/or time.
- **Resident Fonts (Standard Firmware):** Letter Gothic Bold (#93779), Courier Bold (#93952), CG Triumvirate Bold Condensed (#92250), OCR-A (#90993), OCR-B (#91409), CG Triumvirate (#92244), CG Triumvirate Bold (#92248), and CG Times New Roman (#92500).
- **SD memory card slot:** Supports SD cards from 4 to 32 GB.
- **Serial RS-232:** DB9 connector
- **USB / Device 2.0 (Type B)**
- **USB / Host 2.0 (Type A):** The USB host port shall be capable of supporting USB memory devices.

- **Ventless System:** For operation in environments with airborne particulate matter without compromising performance.

Optional Features

Ask your authorized representative about the following enhancement options:

- **Andalé Fonts:** A selection of four different purchasable Andale fonts can be provided (one font per SD card). The Andale fonts will become active when the SD card is installed.
- **GPIO (General Purpose Input/Output):** An internal GPIO card can be installed in the printer using the option slot. This option shall be factory or field installable by a trained service person.
- **Peel Dispenser:** Peels off labels one at a time before printing the next label and rewinds the liner into a discardable roll. Peel-off is available as a factory option or field installable kit that includes an internal label rewinder.
- **Internal label batch rewinder:** Rewinds printed labels into a removable roll. Batch rewind is available as a factory option or field installable kit that includes an internal label rewinder.
- **IPDS:** The printer has this option installed but needs to be activated by the factory or by use of an SPX at a later date. The printer must have a 300 dpi printhead installed to support this option.
- **Media Cutter:** Automatically cuts printed media when the media exits the printer. Available for 4 and 6 inch printers.
- **Media Cutter Tray:** Used with the media cutter option to catch and collect the cut media in a bin.
- **Online Barcode Validator:** Analyzes each bar code to ensure it meets stringent scanning standards. This inspection validates the symbology and specifications of both linear and PDF417 bar code images. Bad bar code labels are cancelled and good replacement labels are printed.
- **Online Barcode Validator 2-D**: Analyzes each bar code to ensure it meets stringent scanning standards. This inspection validates the symbology and specifications of linear picket fence, linear ladder, and various 2-D bar code images. Bad bar code labels are cancelled and good replacement labels are printed.
- **RFID:** Internal and external UHF RFID antennas (4”) and external antenna (6”). Compatible with EPC Global Gen 2 Class 1 inlays and tags, both standard and On-Metal.
- **Postscript/PDF:** The PS/PDF selection from the *System* > *Control* > *Program Select* menu enables your printer to support Postscript and PDF applications directly from the host computer making your ERP and WMS integration simple. This active program can only be selected when the proper security is installed.
- **Parallel:** Centronics®-compatible parallel, IEEE® 1284 compliant parallel. The printer is no longer Energy Star 3.0 compliant when the parallel port option card is installed.
- **Premium Asian Fonts:** A selection of three different purchasable Asian fonts can be provided (one font per SD card). These Asian fonts include Hanzi GB, Kanji SJIS, and Hangul, are available for use when the SD card is installed.
- **QCMC (Quick Change Memory Card):** The QCMC provides the ability to duplicate an entire printer’s firmware, saved configurations, and custom files quickly through the printer’s control panel with a user friendly interface.
- **TN5250:** The TN5250 selection from the *System* > *Control* > *Program Select* menu enables your printer to communicate with an IBM host through a network interface using the 5250 datastream. This feature allows you to use an application generated for the coax/twinax emulation to be printed through the network interface. This active program can only be selected when the proper security is installed.

- **Wireless Network:** This card provides wireless 802.11a/b/g/n/ac connectivity without expensive cabling and reconfigurations required from a wired network. PNE is standard with this option.

For more information about printer options, see *Appendix* B page 307.

Thermal Printer Technology

Quiet and fast, with excellent print quality, your multifunction thermal printer uses an inline thermal printhead with heating elements and special paper or ribbon.

The Printing Process

The thermal printhead allows two modes of operation:

- **Direct Thermal**

During *direct* thermal printing, the thermal printhead selectively heats small, rectangular *thermal* dots. When these contact the coated thermal paper, the dyes and developers in the coating react to the heat and create an image. This mode of printing is generally used for short-term labeling applications.

- **Thermal Transfer**

During thermal *transfer* printing, the heated thermal dots contact a thermal ribbon. The heat deposits the ribbon coating to the label material and bonds (melts) the image to the label. This method is used especially for abrasive, long-storage applications and for specialized applications, such as in extreme environmental conditions or where tamper-proof labeling is required.

Dynamic Print Control

Dynamic print control is a unique feature of your thermal printer that provides excellent print quality by preventing unevenness of print density.

Print quality largely depends on how the thermal paper or the thermal ribbon and thermal transfer paper responds to the heat of the thermal printhead.

During printing, the thermal printhead must reach a set temperature in the shortest possible time. Then it must cool down to the original temperature in the shortest possible time after printing. Thus print quality is dependent on the precise control of the energy supplied to the thermal dots.

The dynamic print control is a method for predicting the quantity of heat required to print dots based on the results of the previous printing. This prevents unevenness of print density and results in the printing of narrow- ladder bar codes or vertical grid lines that are straight from the microscopic viewpoint.

2 *Operation*

Controls and Indicators

Power Switch

The power switch is located on the bottom back panel of the printer. To apply power, place the switch in the | (ON) position. When you first power on the printer, an initialization sequence will immediately appear on the color LCD control panel.

To remove power, place the power switch in the O (OFF) position.

Control Panel

The control panel is located on the front of the printer and includes a Status LED array, QVGA color display, PAUSE key, FEED key, LEFT SOFT key, RIGHT SOFT key, and navigation keys (buttons) with the ENTER button in the center. These are described in the following tables.

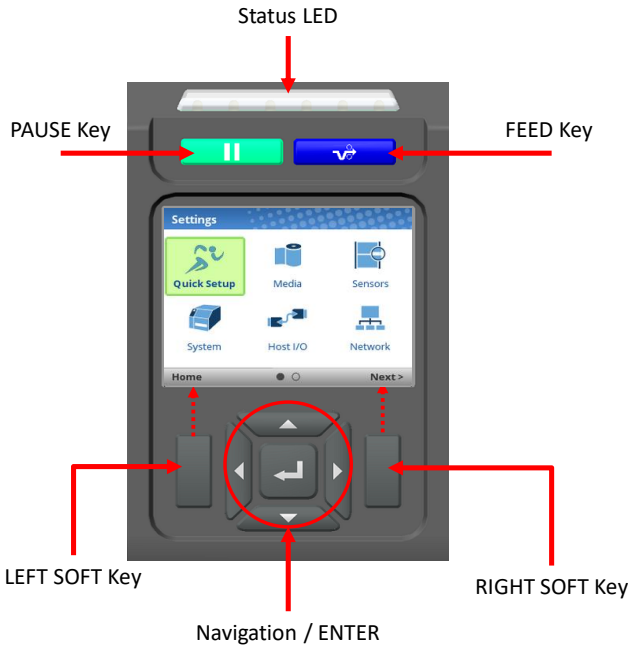

The QVGA (quarter VGA) screen is a 320 x 240 pixel color display (non-touch). It is comprised of a Header that shows the printer state and location with the User Interface (UI), the general display area, and a footer used to show the purpose of the LEFT and RIGHT SOFT keys (when active).

The status LED indicates when the printer is ONLINE, OFFLINE, or when there is a fault condition:

- **LED is on solid**: ONLINE and Ready to Print.
- **LED is off**: OFFLINE and not accepting data.
- **LED is flashing**: Fault Indicator.

Button	Description	Functionality
	PAUSE Key Toggles the printer between ONLINE and OFFLINE Modes.	When ONLINE, sets printer to OFFLINE Mode and the UI to the Home Screen. When OFFLINE, returns the printer to the Home Screen first and then a second press will put the printer back ONLINE.
	FEED Key	Advances the media one label length. When ONLINE, the menu *Printer Control* > *Feed Key Online* must be enabled for this key to function.
	Navigational Keys The navigational menus consist of up, down, left, and right keys with a ↵ ENTER button in the center for selection.	Used to select icons, menu selection, and navigation in the UI.
	Soft Keys There is a LEFT and RIGHT SOFT key on the sides of the navigational menus. The labels on the footer of the UI will explain their function.	Check the labels on the footer of the UI screen. The meaning of the soft keys will vary.

Operating Modes

The current operating mode can be selected through the control panel keys or can result from routine operations such as powering on the printer.

Online: In ONLINE mode, the printer can receive and print data sent from the host. Pressing the PAUSE key toggles the printer between the ONLINE and OFFLINE modes. The Status LED indicator is on.

Offline (Home): When the printer goes OFFLINE, the Status LED is off and the UI is in Home Screen. From the Home Screen, the user has three different icons to choose from: 1) Wizard, 2) Settings, and 3) Calibration. The green highlighted icon is the current selection. Pressing the PAUSE key toggles the printer from Home Screen to ONLINE mode.

Settings: When Settings is chosen from the Home Screen, the user has access to the printer menus by navigating icons and traversing menu lists. Configurations can be saved using the *Configs* icon or by use of the Auto-Save feature when returning ONLINE.

Wizard: When Wizard is chosen from the Home Screen, the user can perform different areas of printer setup with the help of detailed explanations, references to online videos via QR code links, and other material. On the first power-cycle, the user will automatically be taken into the Printer Setup Wizard.

Fault: In fault mode, a fault condition exists that must be cleared before printing can continue. The Status LED indicator flashes, the alarm beeps (if configured to do so), and the UI shows the Fault screen.

Before normal printing can continue, the fault must be corrected, the message cleared by pressing the PAUSE key, and the printer placed ONLINE.

Online Screen

When the printer is ONLINE and ready to receive data, the ONLINE screen is shown. By default, this will be the first screen the user sees after the power-up process has completed. In order to demonstrate the full features of the ONLINE Screen, the following options are assumed:

- Network is installed and IP is set
- WiFi is installed and IP is set
- The printer has a Network Printer Name
- The Validator is installed and enabled
- The Active Configuration has been saved under a custom name “Warehouse”
- The *Media* > *Handling* > *Print Mode* is set to Transfer (ribbons).
- The menu option under *System* > *Control* > *Batch Counter* is enabled.

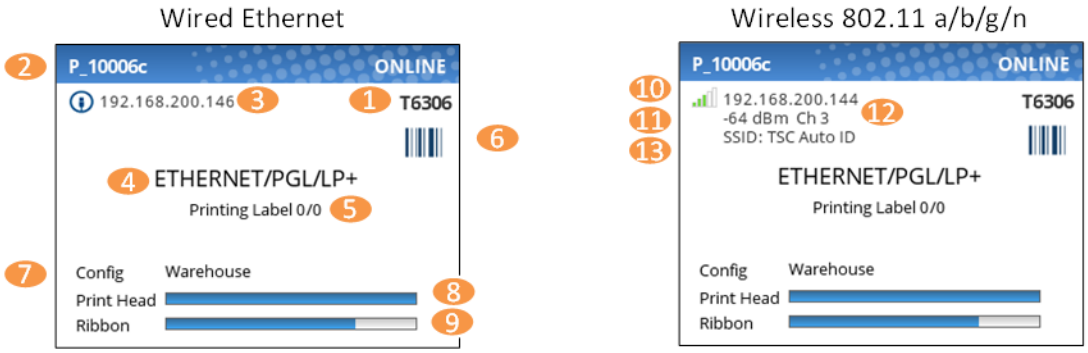

The illustration above has labels associated with each of the ONLINE screen features which are described in the table below. Notice there are differences for the wired Ethernet and wireless ONLINE screens.

Item	Description
1	The full **model name** includes the printer width and DPI.
2	The **Network Printer Name** can be set via telnet, SNMP, or the webpage and is used with Ethernet or WLAN features.
3	The **Ethernet IP address** is displayed if the IP address is set (non-zero).
4	The active **IGP Emulation** and the active **Host IO** (based on last job).
5	This area is reserved for **messages** such as receiving data, batch counters, and job status.
6	When the **ODV option** is enabled, the barcode icon will appear. If the option is installed but disabled, this icon will have a red strike ( ). When validator is not installed, no icon will show. When the **RFID option** is installed, the RFID icon ( ) will appear. If the RFID option is not enabled, the icon will appear light grey. If not installed, no icon will show.
7	The last loaded configuration is referred to as the “**Active Config**”.
8	The **print head gauge** is used to show how much of the print head has been used in relationship to the warranty.
9	The **ribbon gauge** is used when a ribbon is installed (thermal transfer).

Item	Description
10	The **WLAN IP address** is displayed if the IP address is set (non-zero). There is also a signal strength indicator next to the WLAN address.
11	The WLAN signal strength is displayed in dBm
12	The WLAN active channel
13	The WLAN SSID

If there is a warning that needs to be displayed while ONLINE, a popup message will come onto the screen. For example, entering Power-Saver mode, Print Head Hot, etc.

Offline (Home) Screen

When the printer is taken OFFLINE using the PAUSE Key II, the UI will show the *Home* screen. The *Home* screen will be the first screen seen by the user when transitioning from ONLINE to OFFLINE. Likewise, it will be the last screen seen by the user before transitioning back ONLINE. The right corner of the header may include the ! symbol in case there are faults in the system not yet cleared.

Using the navigational keys, the user can move among three options:

- **Wizard** – Provides Setup Instruction, Web Resources, and other links to the Printronix website via QR barcodes for Product Support.
- **Settings** – Provides access to the printer menu system for configuration.
- **Calibrate** – Makes Calibration convenient and easy to perform when media or ribbon are installed.

There are also functions for the LEFT and RIGHT SOFT keys. The LEFT SOFT key “Cancel Data” is present if there is data within the buffer and the setting *System* > *Control* > *Cancel Operation* is enabled. The RIGHT SOFT key labeled “Info” will show the current configuration as text on the UI and the user can scroll through the data and/or print if desired.

Wizard

The Wizard has several resources available as shown in the next figures. The greatest benefit of the Wizard is the first subcategory “Wizards”. By highlighting this category (green) and pressing ENTER or the RIGHT ARROW key, the user can then select the Wizard of choice to run:

- **Printer Setup** will help the user choose the proper display language, install ribbon & media, set media and sensor options, calibrate, and run a test pattern to verify the product is working properly.
- **Application** helps the user setup the menu configuration particular to their label or application coming from the host system.

- **Print Quality** helps the user adjust the printer mechanically, and set Print Speed and Intensity of the printer. A test printout helps the user in making the choices.

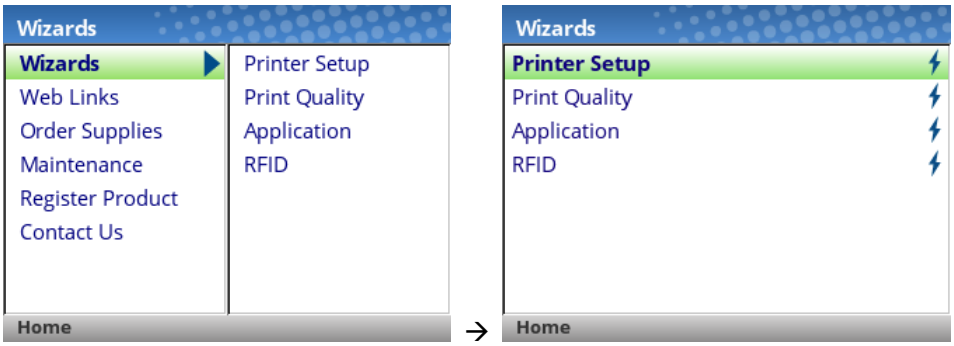

When a Wizard has been completed (all steps executed until the end), the user is required to save their configurations per usual procedure (see *Saving a Configuration* page 58). The exception to this is the first time the printer is powered up; in this case, the user is automatically taken into the Printer Setup Wizard and the configuration is automatically saved to Config 1 when completed.

The Wizard also has support available in the form of QR barcodes for the other categories such as “Web Links”, “Order Supplies”, etc. These QR barcodes provide links to our company’s website to view online videos, manuals, drivers, including places where they can order supplies and register their product.

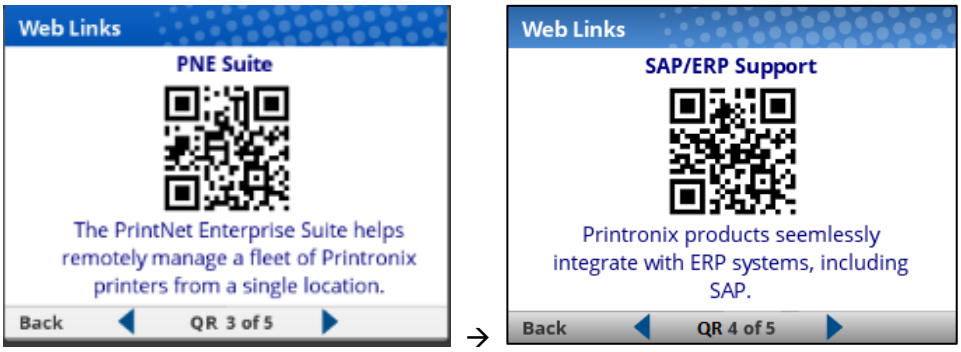

Settings

The *Settings* section of the menu represents the heart of the OFFLINE process in which users will peruse the full menu set, edit menus, run diagnostics, and save configurations. The Settings section begins with two pages of ICONs that can be selected using the navigational keys and the ENTER button.

When an ICON is selected, the user moves into the View Level in which their screen is divided with the submenus on the left and the menus on the right. As they traverse the submenus using the up/down arrow keys, the menus on the right change so that users can quickly see the menu contents.

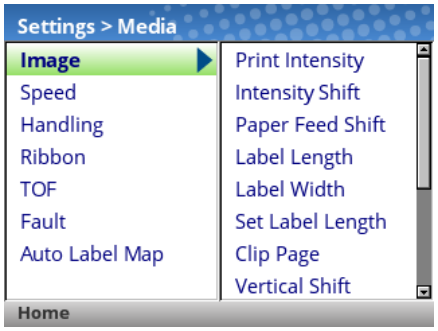

To view the full contents of a particular subsection or edit their menus, the user can either press ENTER or use the RIGHT ARROW key to get into the Edit Level. Conversely, the user can hit the LEFT ARROW key to return to the previous screen.

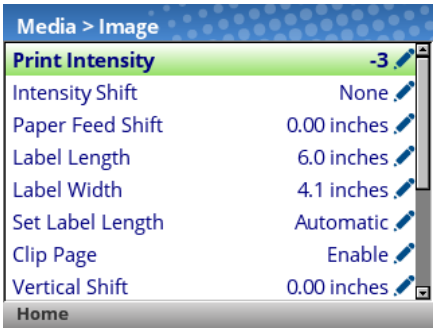

When in the Edit Level, the user can scroll the menus and their values using the up/down arrow keys. The user can edit any menu that has the icon by pressing the ENTER key, changing the value, and confirming their change using the “Apply” soft key. There is also a “Cancel” soft key if the user does not want to accept the change.

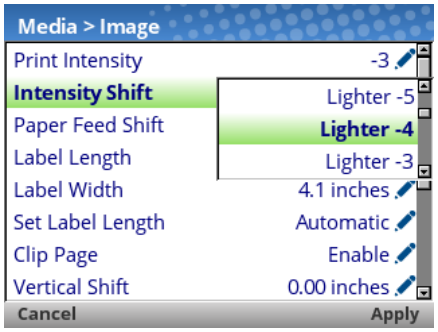

If the menu has a bolt icon, this is an executable menu and pressing the ENTER key will result in a particular action (e.g., running a print test, clearing statistics). If the menu does not have any icon, then it is a read-only menu and pressing ENTER key will not have any effect.

Calibration

Calibration must be performed whenever new media or ribbon is installed or any configuration parameter that affects sensors is modified. Selecting this shortcut ICON and pressing the ENTER key will activate the Auto-Calibrate function, also available in *Sensors > Calibrate > Auto Calibrate*.

Fault

When faults occur, the user will be notified with the following screen on the display. The red color is used to make a clear indication that the printer needs attention.

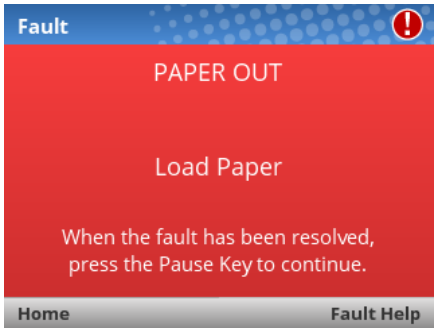

Users can follow the simple instructions shown in the screen or request additional help with the faults by using the RIGHT SOFT key “Fault Help” if available. When Fault Help is selected, the user will be provided a set of screens to help them through the process. However, Fault Help is only offered for faults that are complex or require several steps with the printer mechanism.

The user can also choose via the LEFT SOFT key to go the “Home” screen, then to the Settings or Wizard sections to adjust menu values (e.g., change media parameters, load Configs, etc.).

NOTE: The icon will be shown in the upper right corner as a reminder there is a fault that needs to be cleared. Even when the user has completed all the steps necessary, the icon may continue to be shown. Some faults are self-clearing in the OFFLINE state while other faults are cleared only when returning ONLINE. If any fault was not successfully cleared, the Fault screen shown above will reappear when the user attempts to return ONLINE.

Job in Process

There is no dedicated LED or status indicator for *Job in Process*. Users will know the printer is receiving data instead via messages in the circled portion of the ONLINE screen as shown below.

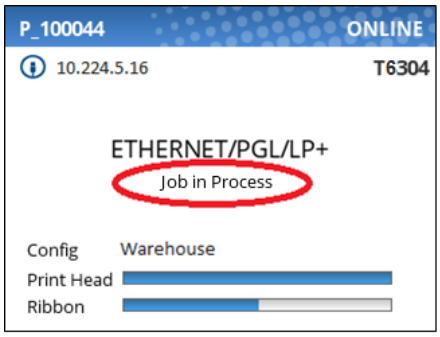

When the printer is in ONLINE mode and data is being received and being processed, the message “Job in Process” will be shown in the message area. After the job has been printed the message will go away. If the user is printing in batch mode and the option *System* > *Control* > *Batch Counter* is enabled, the page count will have priority over the ‘Job in Process’ message.

When the printer is in OFFLINE mode and in the Home screen, the LEFT SOFT key will be labeled “Cancel Data” if there is Data in Buffer when the printer is taken OFFLINE. If there is no Data in Buffer, then the LEFT SOFT key label will not show anything. In order for the Cancel Data operation to be available, the menu *System* > *Control* > *Cancel Operation* must be enabled.

Media Handling Modes

Depending on the media handling options installed, there are up to four modes that can be selected. The factory default is Tear-Off Strip.

- **Tear-Off Strip**. Prints on the media and sends it out the front until the print buffer is empty. It then positions the trail edge of the last label over the tear bar for removal.
- **Continuous**. Prints on the media and sends it out the front of the printer. When the optional internal rewinder is installed, use “Continuous” for Batch Rewind Mode.
- **Peel-Off**. When the optional internal peel / liner rewinder is installed, the printer prints and peels die-cut labels from the liner without user assistance. The label liner is wound on to the rewinder spindle. The printer presents the printed label and waits for you to take away the label before printing the next one (on-demand printing). A “REMOVE LABEL” message will display to remind you to remove the label before the next one can be printed.
- **Cut**. When the optional media cutter is installed, the printer automatically cuts media after each label is printed or can be programmed to cut the media after a specified number of labels have been printed using the Active IGP Emulation cut command.

Once you have decided on the mode, configure the printer.

Setting Up the Printer

NOTE: This section describes the procedures for loading various types of ribbon and media. You can also refer to instructions on the printer itself, on a label on the inside of the media cover.

The term “media” in this manual refers to all the different kinds of paper, label, or tag stock material that can be printed on by the printer. Your thermal printer can print on continuous paper, adhesive backed labels, or non-adhesive tags packaged in roll or fanfold form.

IMPORTANT **For best result, use only genuine Printronix supplies. See “Supplies and Accessories”.**

CAUTION **DO NOT TOUCH the printhead or the electronic components under the pivoting deck. The discharge of electrostatic energy that accumulates on the surface of the human body or other surfaces can damage or destroy the printhead or electronic components used in this device.**

CAUTION **Do not close the pivoting deck without label stock installed between the printhead and the platen, because debris on the platen may damage the printhead.**

CAUTION **Avoid touching the electrical connectors while setting up the printer to prevent electrostatic discharge damage. The discharge of accumulated electrostatic energy can damage or destroy the printhead or electronic components used in this printer.**

IMPORTANT **Adhesive backed labels that DO NOT lay flat on the liner can jam the printer. This can cause the label to peel off the liner. The exposed edges can stick to the label guides and rollers inside the printer.**

If you run out of labels while printing, do not turn off the printer while reloading labels, because you can lose data.

Loading Ribbon

For direct thermal media (no ribbon required), go to “Loading Media” section.

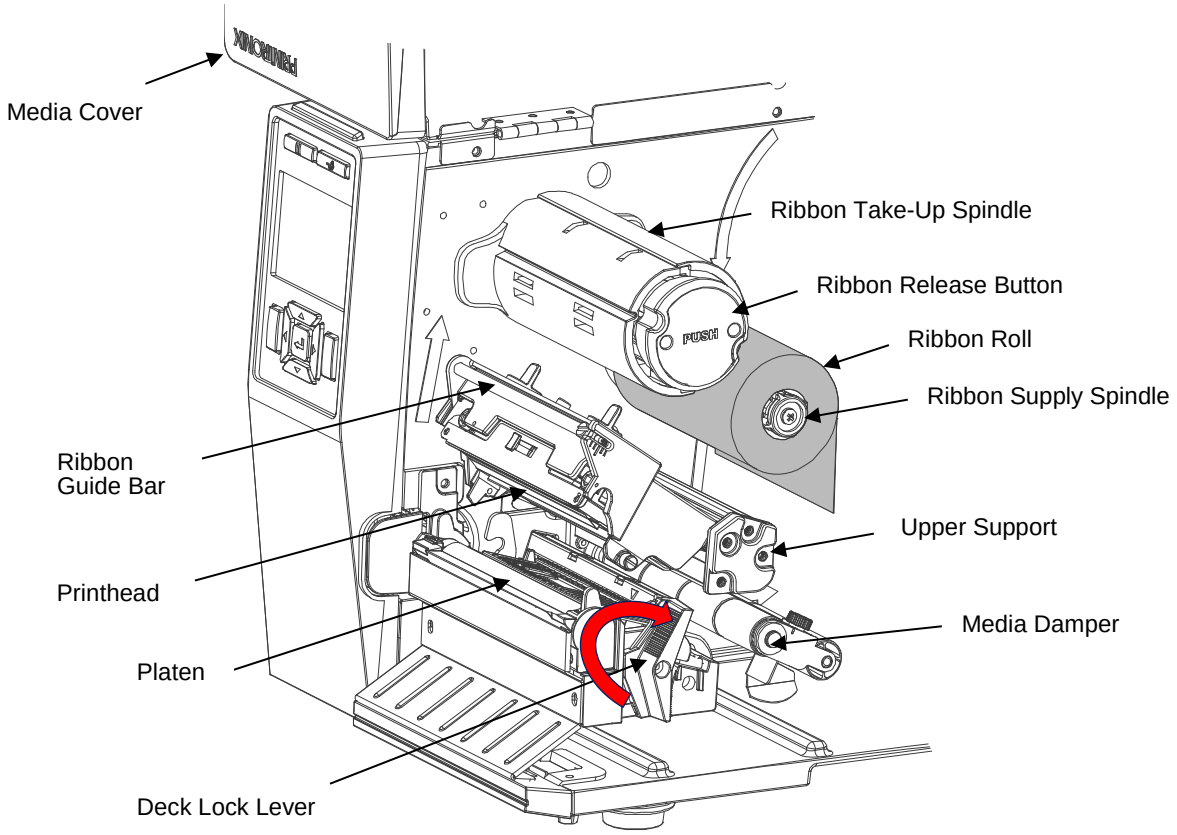

IMPORTANT **Clean the printhead, platen roller, and media sensors every time you change the ribbon.** See *Cleaning the Printhead, Platen Roller and Media Sensors* page 45.

IMPORTANT **Please DO NOT push the ribbon release button when you are loading the ribbon. The ribbon release button is used to remove the used ribbon.**

1. Raise the media cover.
2. Slide the ribbon roll onto the ribbon supply spindle until it is flush with the flange.
3. Open the pivoting deck by rotating the deck lock lever fully clockwise until the deck swings upward.
4. Thread the ribbon between the upper support and media damper and then through the open space between the printhead and platen.
5. Wrap the ribbon onto the ribbon take-up spindle. Keep the ribbon flat and without wrinkles. Wind the ribbon clockwise about 3~5 turns onto the ribbon take-up spindle until it is smooth and properly stretched tight where it will not slip on the take-up spindle when the spindle is turned clockwise.

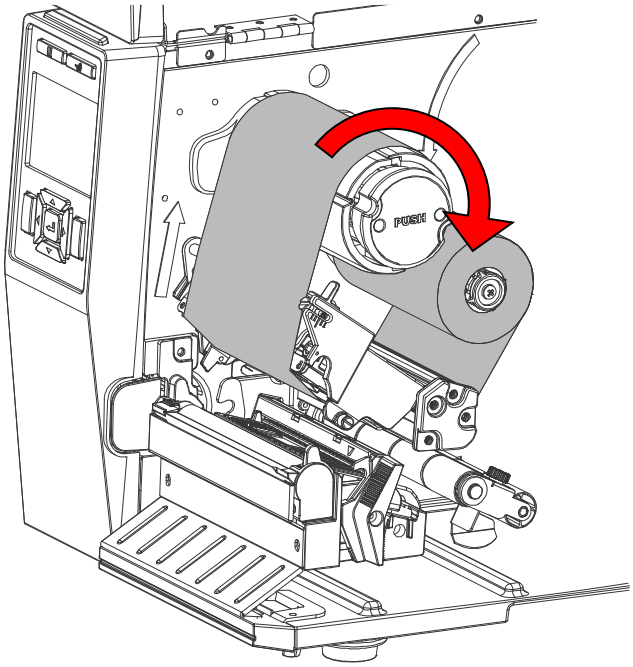

Remove Used Ribbon

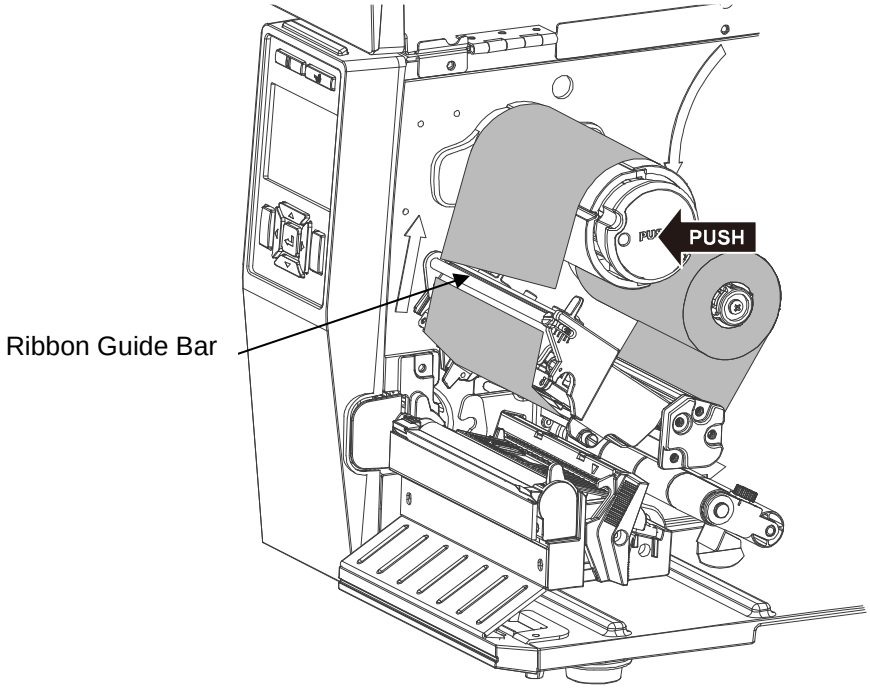

1. Break the ribbon between the ribbon guide bar and the ribbon take-up spindle.
2. Push the ribbon release button and slide the ribbon off from the ribbon take-up spindle.

Loading Media

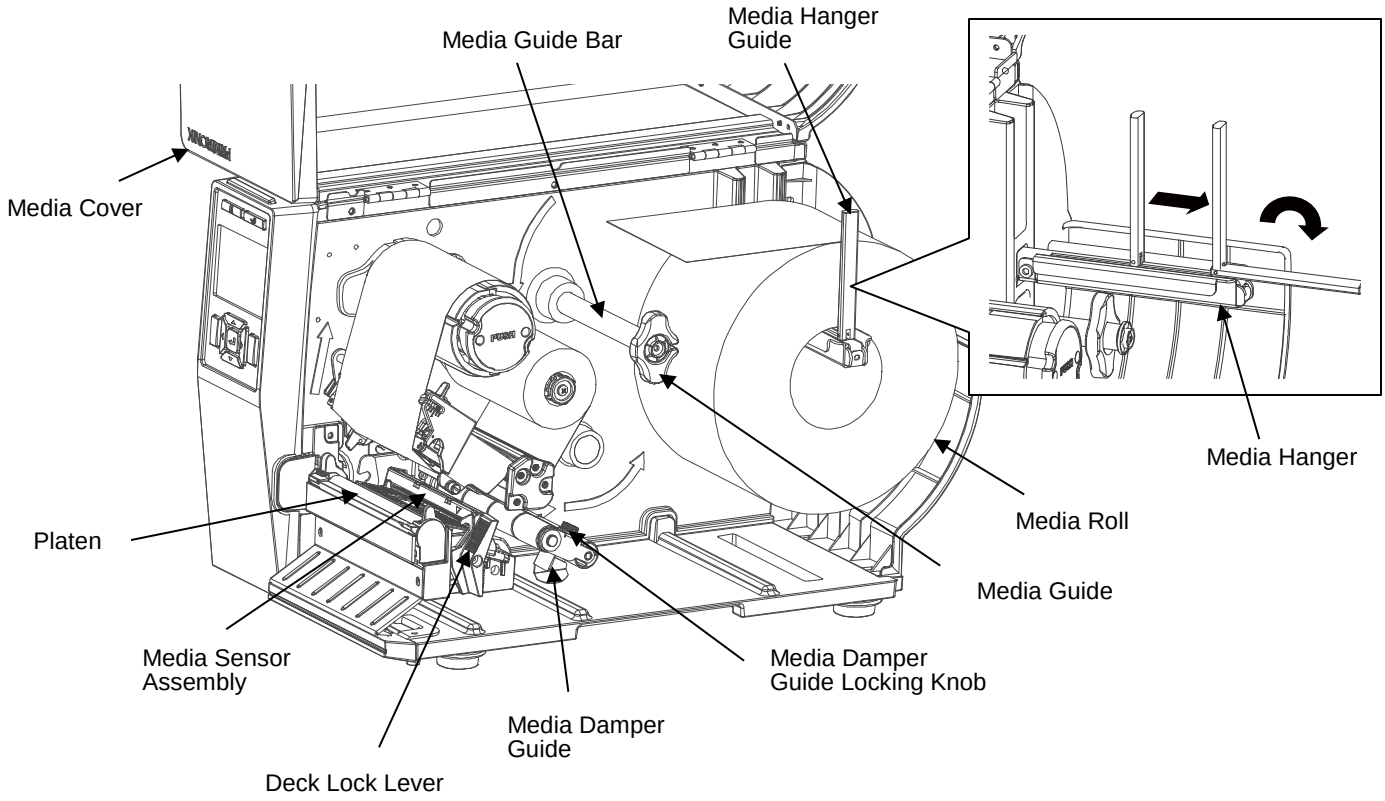

1. Slide the media hanger guide outward to the end of the media hanger (as shown).
2. Place the media roll onto the media hanger and slide the media roll until it is flush with the printer's side wall.
3. Slide the media hanger guide against the media roll to prevent horizontal travel.
4. Thread the media above the media guide bar under the media damper and through the media sensor assembly. Then slide the media bar guide lightly against the outside edge of the media.
   Note: For thick tags (on-metal RFID tags), it can be threaded under the media guide bar. Refer to media loading illustration on step 6.
5. Now route the media under the inboard and outboard media guides located behind the platen. Adjust the outboard guide over the outside edge of the media.
   Note: For the thick tags (the media thickness > 0.7 mm), the inboard media guide can be opened as shown below.

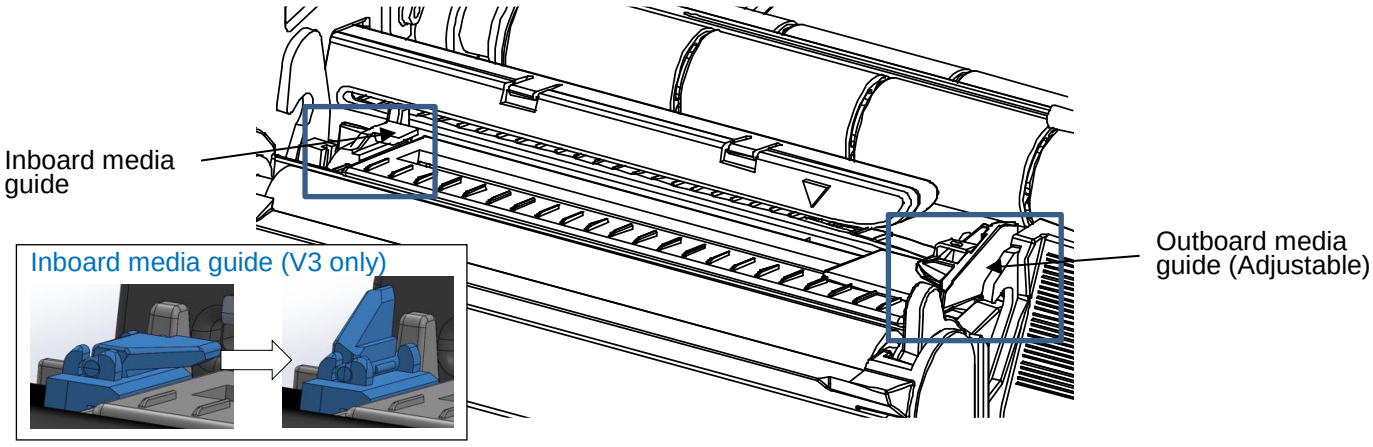

6. The ribbon and media loading illustration label (shown below) is located on the inside of the media covers of all 4 inch and 6 inch width T6000e model printers.

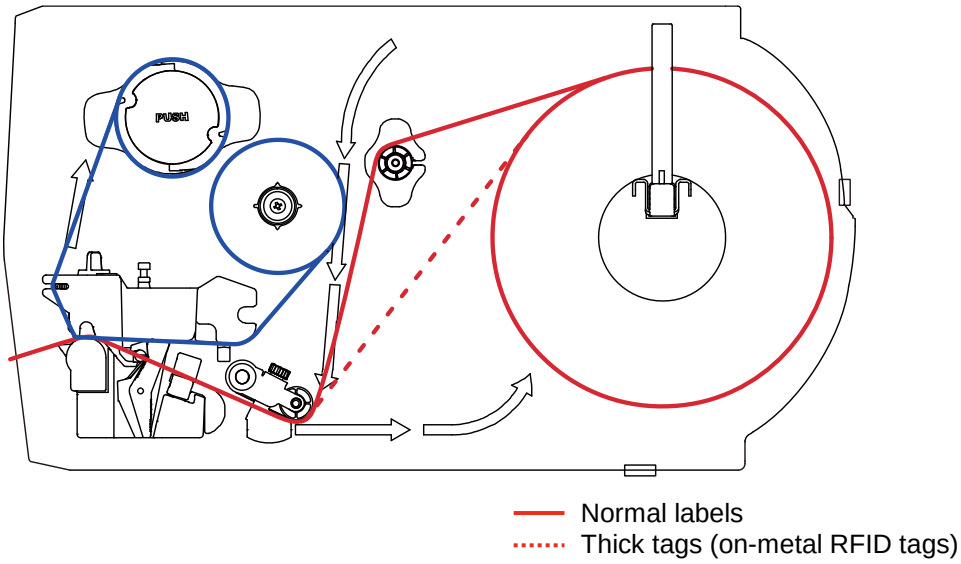

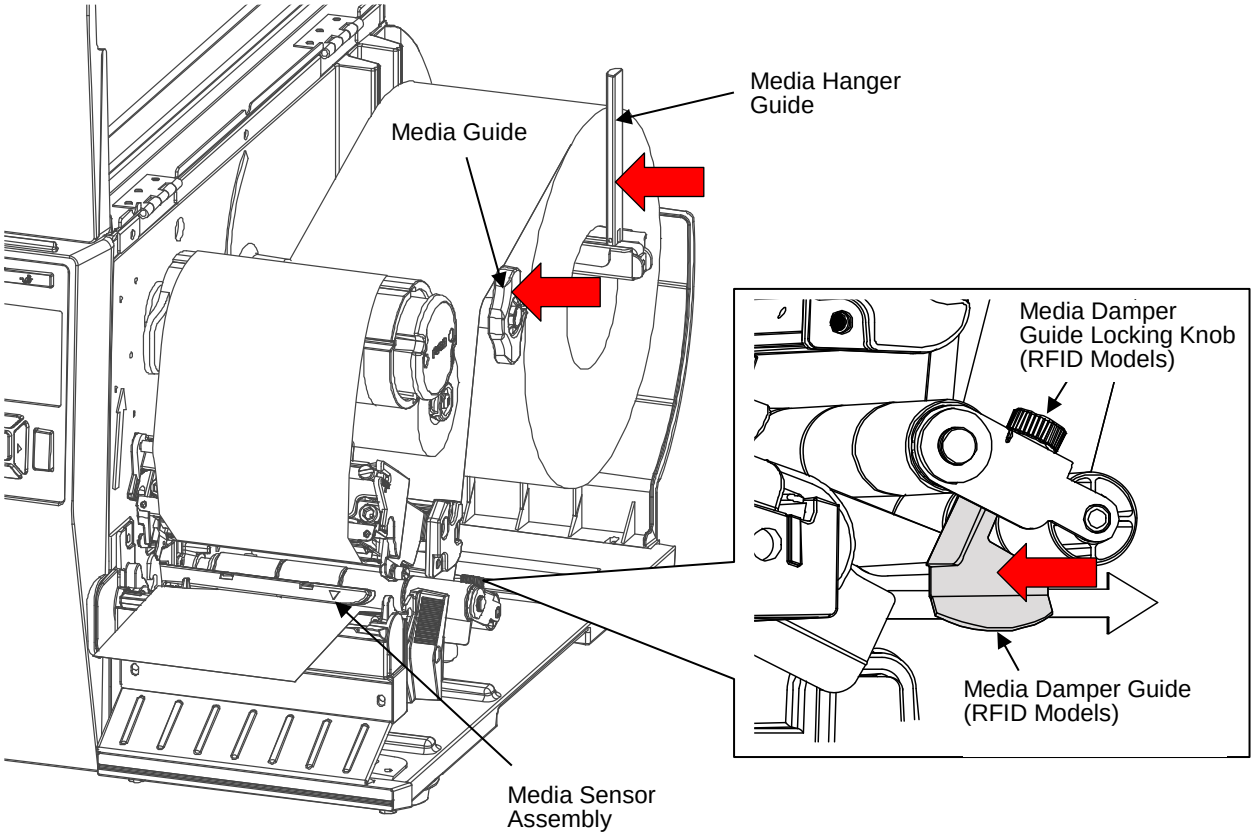

7. For RFID models only: Turn the media damper guide locking knob counterclockwise just enough to slide the media width guide, and no more.
8. For RFID models only: Position the media width guide lightly against the outside edge of the installed media and tighten the locking knob by turning it clockwise.
9. Slide the media sensor assembly so that the media sensor(s) are placed in the path of the desired label length indicators (liner gaps, notches, holes or black marks) on the media. The next page shows the position of media sensor assemblies. **The sensor location is indicated by a triangle mark ▽ on the sensor housing.** Notice that the 4" model has one sensor assembly that detects gaps, notches, holes and black marks while the 6" model has two separate assemblies, an inboard assembly for detecting only gaps, notches or holes and an outboard for detecting only black marks.

NOTE: Your printer is equipped with media sensors that detect the top-of-form position on media with label length indicators (gaps, notches, holes, or black marks). These sensors also detect when a Paper Out condition exists. For more details and settings, please see "Positioning the Media Sensors" section on page 45.

- For 4" width model

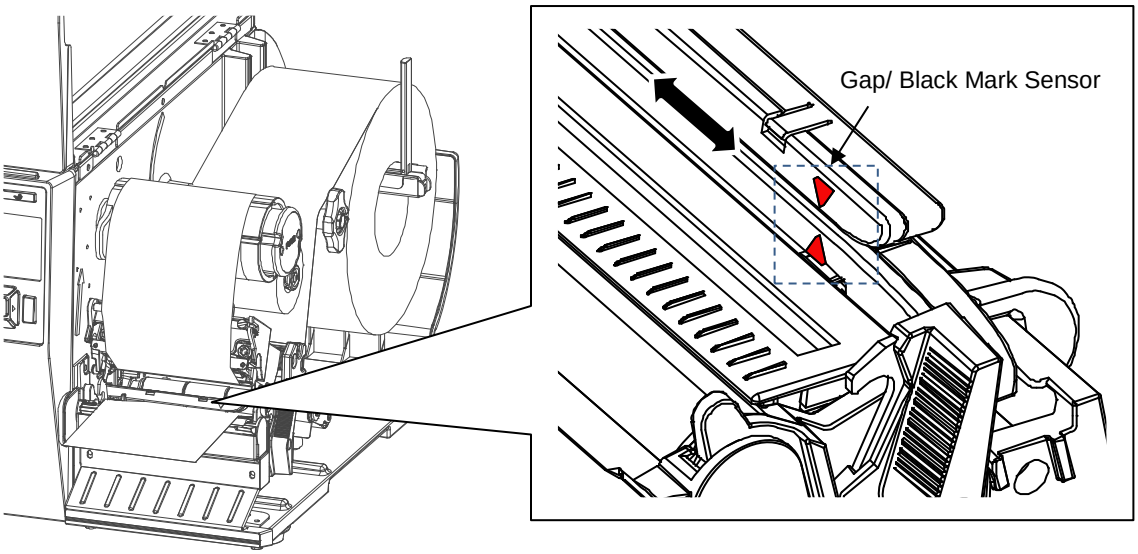

NOTE: Use this handle (see the red box below) to move the media sensor. DO NOT move the sensor by grasping the sensor itself or the RFID metal plate directly.

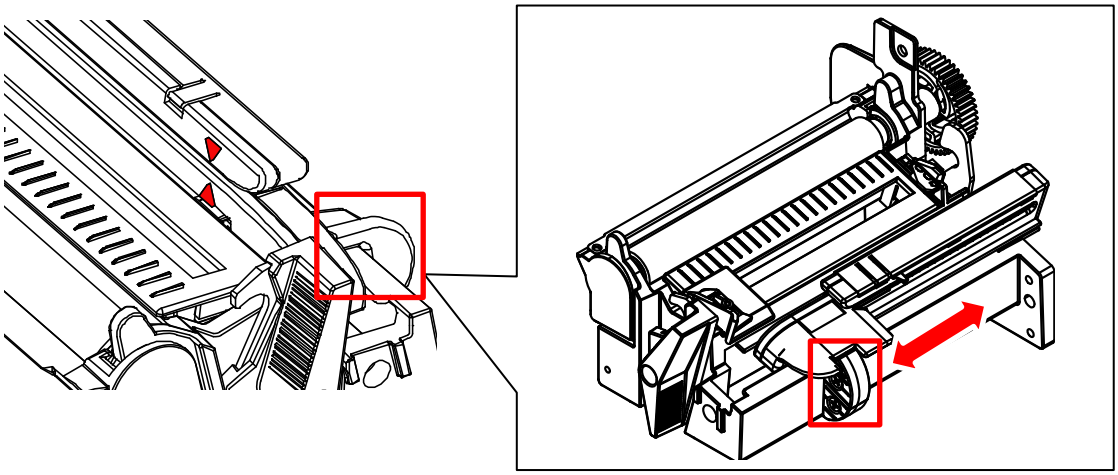

- For 6” width model

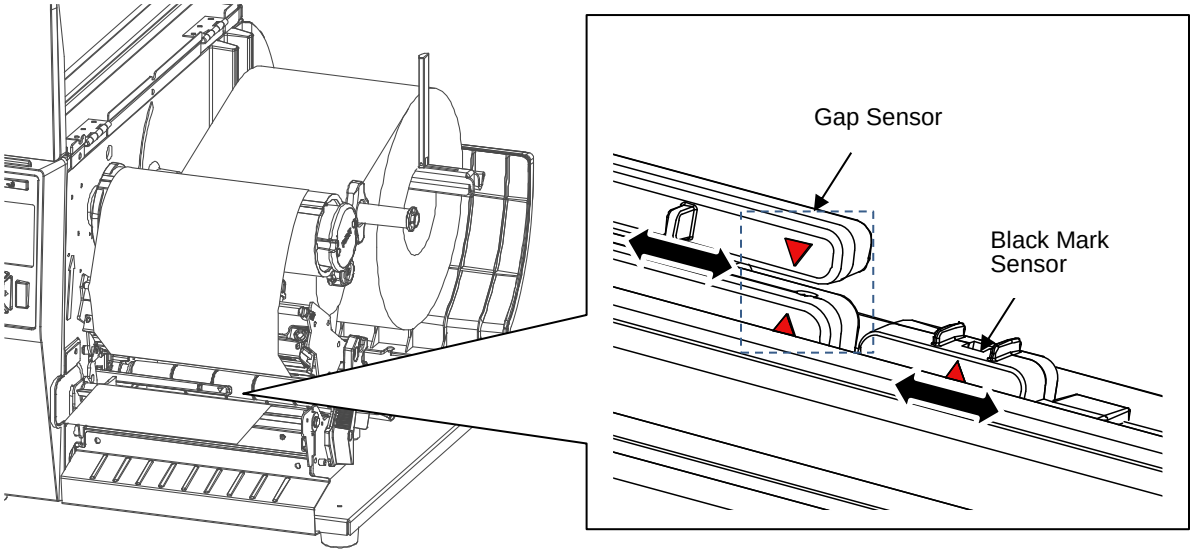

10. Close the pivoting deck by pushing down on both right and left sides of the deck. Make sure the latches are engaged securely.

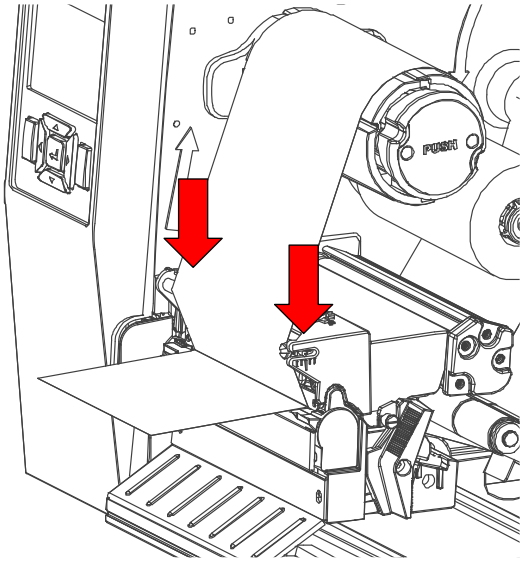

11. Lower the media cover.

Label Peel-Off

You can set up the printer to automatically peel die-cut labels off their liner (backing) and dispense them one at a time while rewinding the liner.

NOTE: Maximum speed supported in Peel-Off mode is 10ips.

Configuring the Printer Menu

1 Set Media Handling to “Peel-Off” within the Application Wizard or directly in *Media* > *Handling* > *Media Handling* menu.

2. Press the PAUSE key to place the printer OFFLINE (Home Screen).

Loading Media Using Peel-Off Mode

1. Open the media cover and refer to the “Loading Ribbon” and “Loading Media” on page 32 ~ 34.
2. Open the peel-off front door by pushing down the peel-off roller release lever.

- For 4” width model

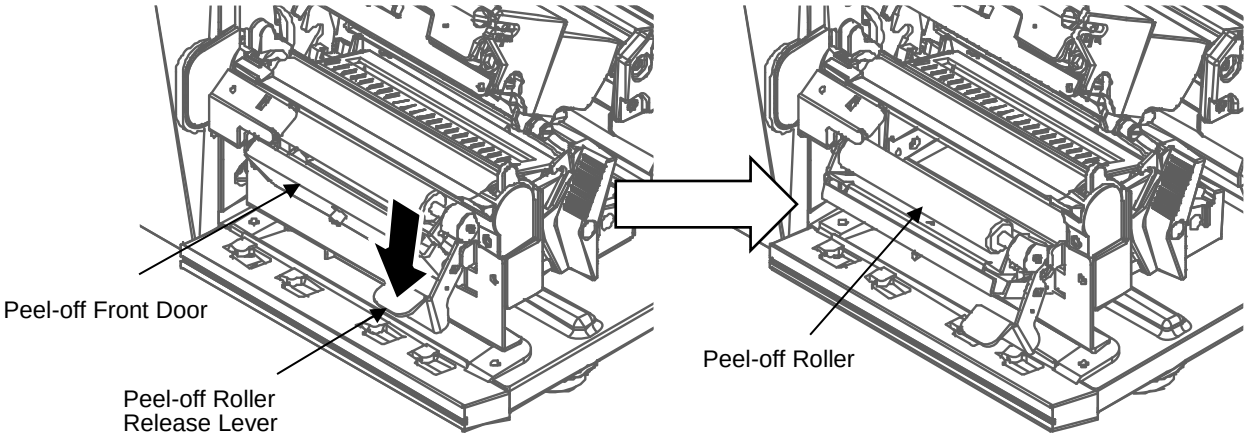

3. Thread the media (label and liner) over the tear bar and around the peel-off roller, then through the opening at the bottom of the front door and into the printer.

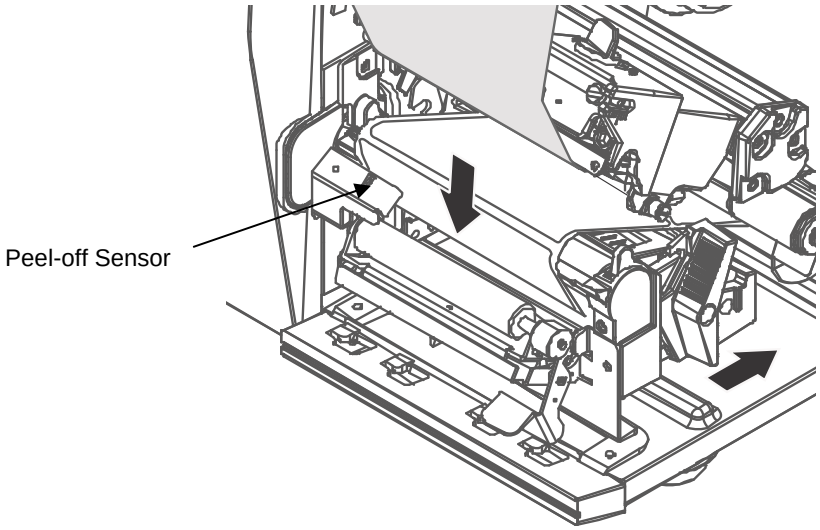

4. Wrap the label onto the internal rewind spindle and rotate the spindle counter-clockwise about 3~5 full turns until the label is properly stretched tight and will not slip on the rewind spindle.

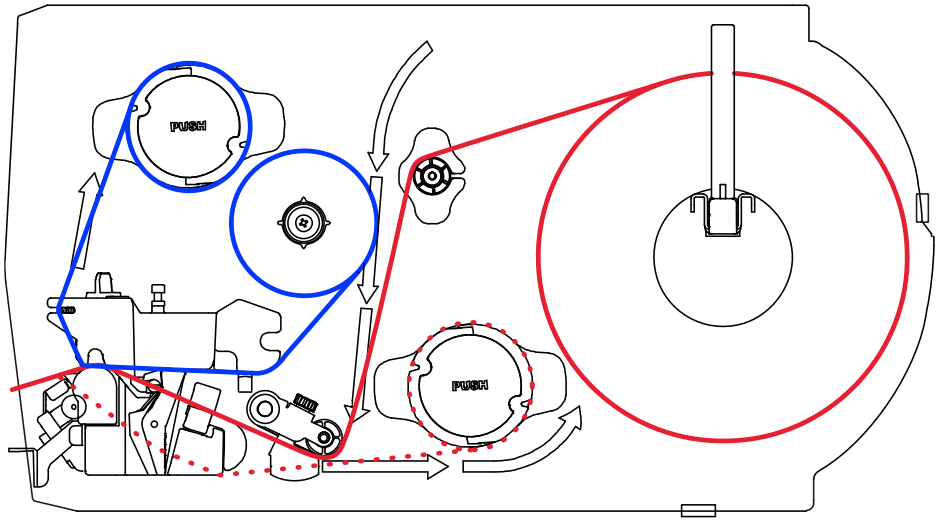

5. Lift up the peel-off roller release lever to close the front door.
6. Press down on both sides of the pivoting deck to close the printhead.
7. Press the FEED key. The label advances to the peel-off position, and "Remove Label" displays on the LCD.
8. Manually remove the peeled label from the printer.
9. Press the PAUSE key until the ONLINE screen displays.
10. Close the media cover.

Removing Label Liner from the Rewinder

1. Open the media cover.
2. Open the peel-off front door.
3. Tear the liner at the tear bar.

4. Push the liner release button to release the liner on the internal rewind spindle.

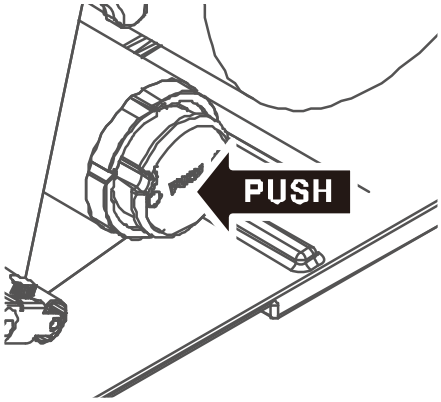

5. Slide the roll of label liner off the rewinder and discard.

Printing Adjustments

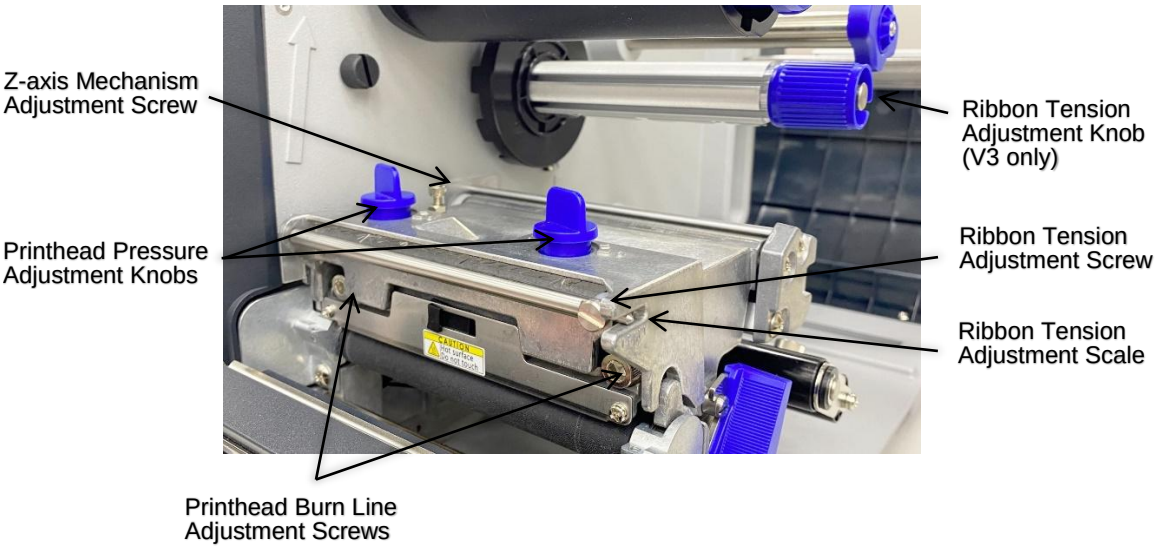

Printhead Pressure Adjustment

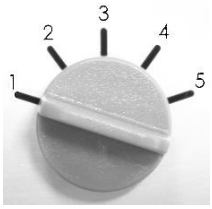

Each print head pressure adjustment knob has 5 levels of adjustment. Because the printer's paper alignment is located on the left side, different media widths require different pressure to print correctly. Therefore adjustment of both pressure knobs may be required to get your best print quality. For example, if the label width is 4", adjust both print head pressure adjustment knobs to the same level. If the label is less than 2" wide, increase the left side print head pressure by rotating the adjustment knob clockwise and decrease the right side pressure by rotating the adjustment knob counter-clockwise to level 1.

Ribbon Tension Adjustment Screw

The ribbon tension adjustment screw has 1 ~ 5 positions for adjustment. Because the printer's ribbon alignment is to the inboard side of the mechanism, different ribbon or media widths require different tension to print correctly. Therefore ribbon tension knob adjustment may be required to get the best print quality.

Printhead Burn Line Adjustment Screws

The print head burn line adjustment screws are used to fine tune the print quality for different thicknesses of media. Turning the screws adjusts the print head's burn line forward or backward as it relates to the platen roller.

The print head burn line default is set for general purpose printing media (plain paper and paper thickness less than 0.20mm). In general , print head burn line adjustment will not be required. If you have poor print quality, please try changing the print speed, print intensity, print head pressure or Z-axis mechanism adjustment first.

Caution: Incorrectly adjusting the print head burn line adjustment knobs can lead to poor print quality and may cause damage to the printer. Proceed with caution.

Poor print quality when using paper thicker than 0.20mm may be due to the print head burn line not being at the optimized position. To improve the print quality, increase the head pressure or adjust the knobs counter-clockwise to move print head burn line toward the paper out direction then print again. Continue to adjust the burn line position and test print as necessary until the printed image is clear.

Z-axis Mechanism Adjustment Screw

If the left side print head adjustment knob setting has been set to 5 (the highest pressure index) the wrinkle/ poor print quality can't be avoid, you can rotate the Z-axis mechanism adjustment screw to adjust. Please refer to next chapter for more information.

Ribbon Tension Adjustment Knob (V3 only)

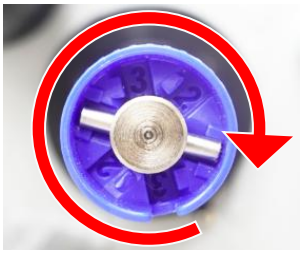

The Ribbon Tension Adjustment has 3 positions. Because the ribbon is aligned to the inward side of the printer mechanism, different ribbon or media widths may require different ribbon tension to print correctly. Therefore, it may be necessary to adjust the ribbon tension using the adjustment knob to avoid ribbon wrinkle and get the best print quality The greatest tension is position #1 (factory default). Adjust the tension by pressing in and turning the knob to the desired setting (1, 2 or 3) on the ribbon supply spindle.

For scuffing issues, try decreasing the ribbon tension using the ribbon tension adjustment knob.

<u>Suggestion for Ribbon Tension Adjustment:</u>

<u>For 4" printers:</u>

Ribbon Width	Ribbon Tension Adjustment	Notes
4 inch	#1	Factory Default
3 inch	#2	
2 inch	#3	

For 6” printers:

Ribbon Width	Ribbon Tension Adjustment	Notes
5 to 6 inch	#1	Factory Default
3 to 4 inch	#2	
Less than 3 inch	#3	

Mechanism Fine Adjustment to Avoid Ribbon Wrinkles

This printer has been fully tested before delivery. There should be no ribbon wrinkle presented on the media for general-purpose printing application. Ribbon wrinkle is related to the media thickness, print head pressure balance, ribbon film characteristics, print darkness setting…etc. In case the ribbon wrinkle happens, please follow the instructions below to adjust the printer parts.

Adjustable Printer Parts	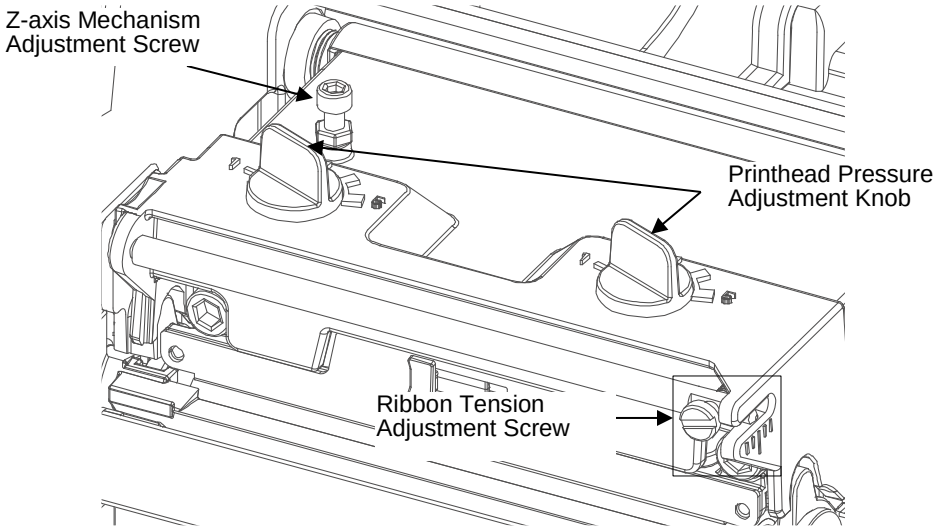

Symptom	1. Wrinkle happens label lower left to upper right direction (“ / ”)	2. Wrinkle happens label lower right to upper left direction (“ \ ”)
Wrinkle Example		
	If the wrinkle on the label starts from the lower left side to upper right side, please do the following adjustment. 1. Clockwise direction adjust the ribbon tension adjustment screw to “2” or “1” position. Then check if wrinkle is gone. 2. Decrease the right side print head pressure adjustment knob setting 1 level per each adjustment then print the label again to check if wrinkle is gone. 3. If the right side print head pressure adjustment knob setting has been set to index 1 (the lowest pressure index), please increase the left side print head pressure. 4. If the left side print head pressure adjustment knob setting has been set to 5 (the highest pressure index) and the wrinkle can’t be avoided, please rotate the both knobs back to setting 1 then rotate the Z-axis mechanism adjustment screw clockwise for a few degrees and print again to fine tune the print head pressure distribution.	If the wrinkle on the label starts from the lower right side to upper left side, please do the following adjustment. 1. Counter clockwise adjust the ribbon tension adjustment screw to “4” or “5” position. Then check if wrinkle is gone. 2. Decrease the left side print head pressure adjustment knob setting 1 level per each adjustment then print the label again to check if wrinkle is gone. 3. If the left side print head pressure adjustment knob level has been set to index 1 (the lowest index), please increase the right side print head pressure.
	Note for Z-axis mechanism adjustment screw: - Factory default setting, the Z-axis screw is rotated counter clockwise to the end of thread. - Turn the Z-axis mechanism adjustment screw clockwise until you feel the knob touch the mechanism for the first adjustment. - If the wrinkle is still there, please turn the Z-axis mechanism adjustment screw clockwise about 1/4 circle each time for adjustment. - If the winkled direction is change from “/” to “\” by adjusting the Z-axis mechanism adjustment screw, please turn the Z axis mechanism adjustment screw counter clockwise to avoid the wrinkle.	

Feed direction

Positioning the Media Sensors

Your printer is equipped with media sensors that detect the top-of-form position on media with label length indicators (gaps, notches, holes, or black marks). These sensors also detect when a Paper Out condition exists.

The triangular mark ▽ on the media sensor assembly should not be placed in the path of media features that could cause false gap detection or paper out faults. Such features are dark pre-printing, rounded die-cut label corners, vertical gaps associated with side-by-side labels, and extraneous cut-outs, as shown below.

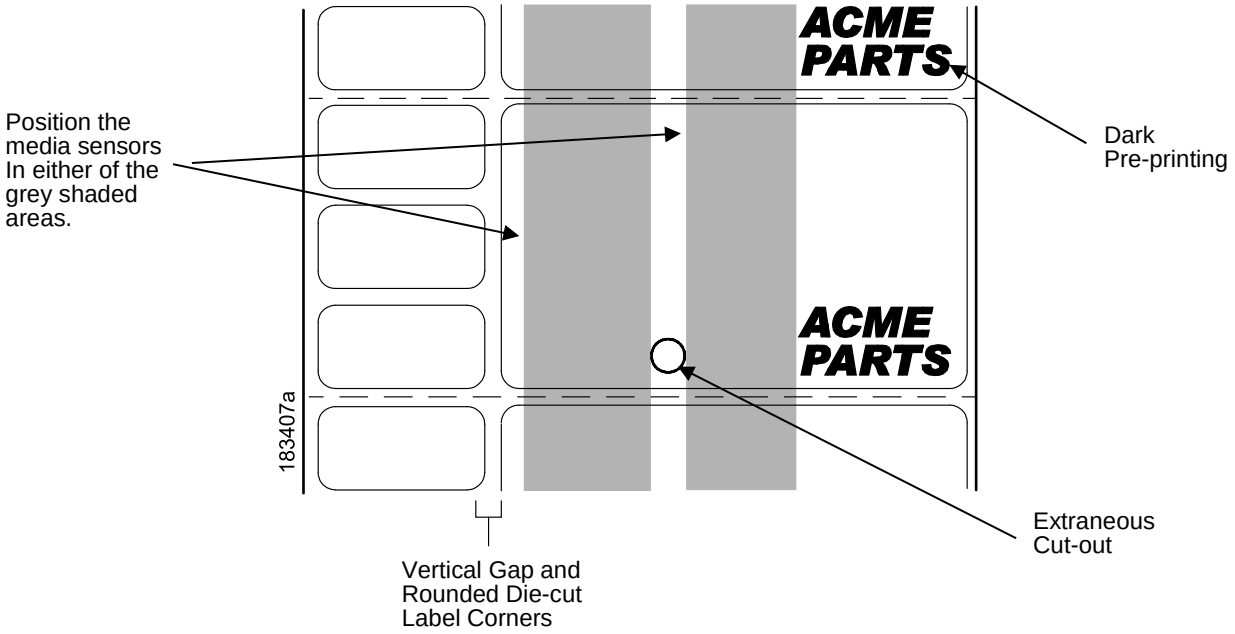

For 4” width model	For 6” width model
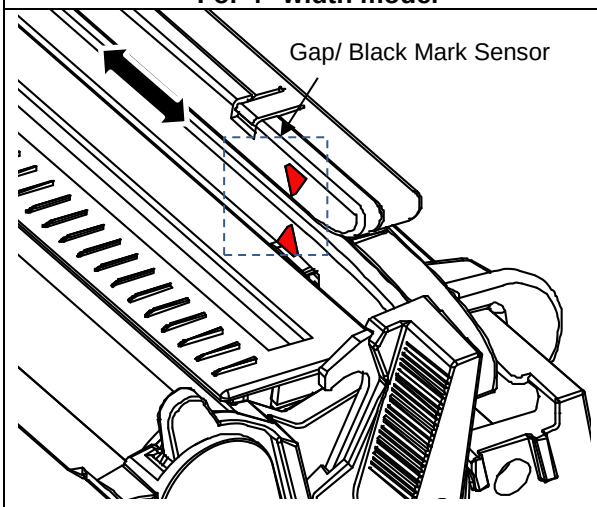	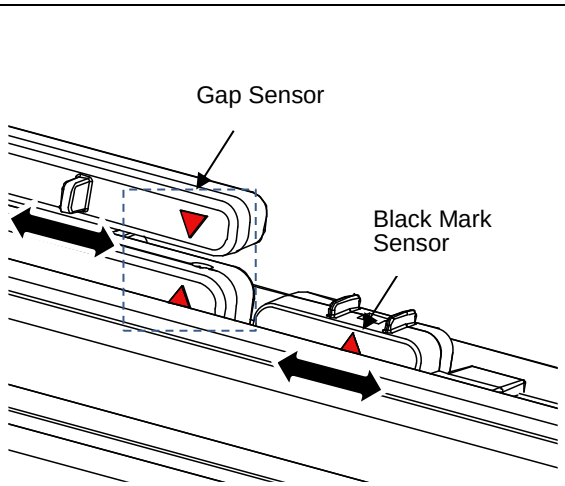

Sensors > Control > Gap/Mark Sensor	
The available options specify the sensor type needed for detecting the Top-of- Form position on media with label length indicators (gaps, notches, holes, or black marks).	
Disable	Select when using media with no label length indicators (no gaps, notches, holes, or black marks), or when you want the printer to ignore all existing label length indicators on the installed media.
Mark	Select when using media that has horizontal black marks located on the underside of the label liner or tag stock.
Gap	Select when using media with a horizontal liner space between die-cut labels, horizontal black marks located on the upper side of the label liner or tag stock with, notches, or holes as label length indicators.

Media with Horizontal Black Marks

1. **4" model printers:** position the triangle mark ▽ on the media sensor assembly in the center of the horizontal black marks located on the underside of media,.

   6" model printers: Position the triangle mark ▽ on the outboard media sensor assembly in the center of the horizontal black marks on the underside of media.
2. Select "Mark" in the *Sensors* > *Control* > *Gap/Mark Sensor* menu. See *Sensing Different Media Types* page 47.
3. Perform an Auto Calibrate. See *Running Auto Calibrate* page 48.

Media with No Label Length Indicators

1. When using media without label length indicators (no gaps, notches, holes, or marks) or when you want to ignore all existing length indicators, place the triangle mark ▽ on the media sensor assembly in the center of the media so it can detect when a Paper Out condition exists.
2. Select "Disable" in the *Sensors* > *Control* > *Gap/Mark Sensor* menu. See *Sensing Different Media Types* page 47.
3. Perform an Auto Calibrate. See *Running Auto Calibrate* page 48

Media with Gaps, Notches, or Holes (Gap Option)

Position the media sensor assembly to detect gaps, notches, or holes in media. .

1. Position the triangle mark ▽ on the media sensor assembly directly over the center of the gap, notch, or hole.
2. Select “Gap” in the *Sensors > Control > Gap/Mark Sensor* menu. See *Sensing Different Media Types* page 47.
3. Perform an Auto Calibrate. See *Running Auto Calibrate* page 48.

Sensing Different Media Types

The printer’s media sensors can detect the different types of label length indicators on a large variety of media types. This is accomplished by selecting the correct sensor option: Gap, Mark, or Disable under *Sensors > Control > Gap/Mark Sensor* menu or within the “Printer Setup” Wizard. *Figure 17* on page 301 illustrates the different media types and label length indicators used on them.

1. Press the PAUSE key to place the printer OFFLINE (Home Screen).
2. Find the Settings ICON and press ENTER.
3. Press the UP + DOWN ARROW keys together until “ENTER SWITCH UNLOCKED” displays.
4. Find the Sensors ICON and press ENTER.
5. Select the “Control” submenu and press ENTER.
6. Find the “Gap/Mark Sensor” option and press ENTER to edit this menu. Find the option that matches the type of label length indicators on the installed media displays:
   - **Mark**. Select when using media that has horizontal black marks located on the underside of the label liner or tag stock.
   - **Gap**. Select when using media with a liner space between die-cut labels or when using tag stock with notches or holes as label length indicators on white background media.
   - **Disable**. Select when using media with no label length indicators (no gaps, notches, holes, or black marks) or when you want the printer to ignore all existing label length indicators on the installed media.

     NOTE: When you select Disable, the length of each label is based on the *Media > Image > Label Length* menu or the value sent via host software.

     NOTE: If the printer detects a false PAPER OUT message when you change to Gap or Mark sensing or vice-versa, find the Home Screen and run Calibrate
7. Press ENTER to enable the displayed option or use the RIGHT SOFT key labeled “Apply”. An asterisk (*) appears next to the selection.
8. Press the PAUSE key or the LEFT SOFT key labeled “Home” to return to the Home Screen.
9. Review *Calibrating the Media Sensors* page 47.
10. Perform the Auto Calibrate procedure per *Running Auto Calibrate* page 48.

Calibrating the Media Sensors

Due to manufacturing differences in media, the media sensors may have difficulty differentiating between the label and the liner or the label and the black mark. When this occurs, the printer may intermittently skip a label or display a fault message such as “GAP NOT DETECTED” or “PAPER OUT”.

Media sensor sensitivity and reliability can be improved by changing the *Sensors > Control > Gap/Mark Thresh* and/or *Sensors > Control > Paper Out Thresh* values. You can change these values manually or automatically by performing an Auto Calibrate or Manual Calibrate procedure from the *Sensors > Calibrate* menu section. (The changes take effect immediately within the current configuration menu.)

Auto or Manual Calibrate is completed successfully when the displayed Sensed Distance value correctly matches that of the installed media. When Gap is selected, the Sensed Distance should match the length from the trailing edge of one gap to the trailing edge of the next gap (or one label + one gap). When Mark is selected, the Sensed Distance should match the length from the leading edge of one black mark to the leading edge of the next black mark.

When you have completed Auto or Manual Calibrate, you can verify the new values are correct by pressing the FEED key several times. Each time you press FEED, media advances one label and stops at the correct Top-of-Form position of the next label.

Once you confirm the correct values, save them to the desired configuration menu before powering off the printer. See *Saving a Configuration* page 58.

Running Auto Calibrate

You can initiate Auto Calibrate via the Home Screen ICON or via the Sensors menus within the Settings section.

NOTE: Verify that the Gap/Mark Sensor option (Gap, Mark, or Disable) matches the installed media. See *Sensing Different Media Types* page 47.

NOTE: Check that the media sensors are horizontally positioned to permit sensing of the label length indicators. See *Positioning the Media Sensors* on page 45.

Make sure the *Media > Image > Label Length* value matches the physical length of the installed media. Entering the correct length forces the printer to advance media far enough during calibrate for long labels (so actual gaps, notches, and marks can be detected) and reduce the amount of media advanced for short labels.

If you try to do an Auto Calibrate when Peel-Off Media Handling is enabled, the LCD will display “CANNOT CALIBRATE” error. Before you can do an Auto Calibrate, you must select another media handling mode.

1. Press the PAUSE key to place the printer OFFLINE (Home Screen).
2. Select the Calibrate ICON and press the ENTER key.
3. Media advances until it can accurately detect the label length indicators and then stops at the Top-of-Form position. The Sensed Distance value will then display for one second.
4. Auto Calibrate is successful when the Sensed Distance value correctly matches that of the installed media:
   - **Gap/Mark Sensor = Gap**: The Sensed Distance value is the physical length of one label plus the length of one gap, notch, or hole.
   - **Gap/Mark Sensor = Mark**: The Sensed Distance value is the physical distance from the leading edge of one black mark to the leading edge of the next black mark.
   - **Gap/Mark Sensor = Disable**: Not applicable. If Gap/Mark Sensor is set to Disable, the Sensed Distance value will not be updated.

   If “GAP NOT DETECTED” displays, run Auto Calibrate again.

   If Auto Calibrate continues to end with an incorrect Sensed Distance value displayed or a fault message displayed, run *Running Manual Calibrate* as described on page 52 or see *Table 13* on page 284.

NOTE: The amount of media sampled during Auto Calibrate is based on the length of a label and transitions detected, without error, between a label and its label length indicators.

5. Press the FEED key several times. Each time you press FEED, the media advances one label length and stops.

   NOTE: After a form feed, the position of the leading edge of the next label depends on the type of Media Handling mode selected under *Media* > *Handling* > *Media Handling* menu. Tear-Off Strip Media Handling will position the label edge at the tear bar, while Continuous will position the label edge under the printhead.

6. Once the Sensed Distance value is confirmed, you can save them to a desired configuration menu before powering off the printer (See *Saving a Configuration* page 58) or you can press the PAUSE key and the printer will automatically display a reminder message that your changes have not been saved and to select one of four possible choices.
7. Once completed the printer will go ONLINE.

Running Media Profile

The Media Profile printout shows the relationship of the Paper Out Threshold and the Gap/Mark Threshold values, illustrates if and when each label length indicator is detected, and shows the difference between the label length indicators and the label. The profile printout (see *Figure* on page 50) helps you set the thresholds for difficult media. This includes pre-printed labels and labels with poor gap/media dynamic range.

Once Media Profile is initiated, the printer will continue to advance media and print the profile in landscape orientation until you press ENTER to stop printing.

NOTE: Verify the *Sensors* > *Control* > *Gap/Mark Sensor* option (Gap, Mark, or Disable) matches the installed media. See *Sensing Different Media Types* page 47.

You will need a minimum installed label width of two inches to support the Profile printout.

Ensure the media sensors are horizontally positioned to permit sensing of the label length indicators. *Positioning the Media Sensors* on page 45.

Ensure the *Media* > *Handling* > *Print Mode* option matches the media installed. Select “Direct” for heat sensitive media (no ribbon required) or “Transfer” for thermal transfer media (ribbon required).

1. Press the PAUSE key to place the printer OFFLINE (Home Screen).
2. Find the Settings ICON and press ENTER.
3. Press the up and down arrow keys together until “ENTER SWITCH UNLOCKED” displays.
4. Find the Sensors ICON and press ENTER.
5. Select the “Diagnostic” submenu and press ENTER.
6. Find “Media Profile/Profile Print” and then press ENTER to start the profile printing process.

   The printer will advance media and continue to print a dynamic profile image depicting the relationship of the label and any label length indicators detected.

7. Press ↵ ENTER to stop the profile printing.
8. Press the PAUSE key to place the printer OFFLINE (Home Screen).

   NOTE: The Gap/Mark and Paper Out Threshold values shown on the Profile printout represent the last values determined from a successful Auto or Manual Calibrate or the factory default values if no Auto or Manual Calibrate was performed.

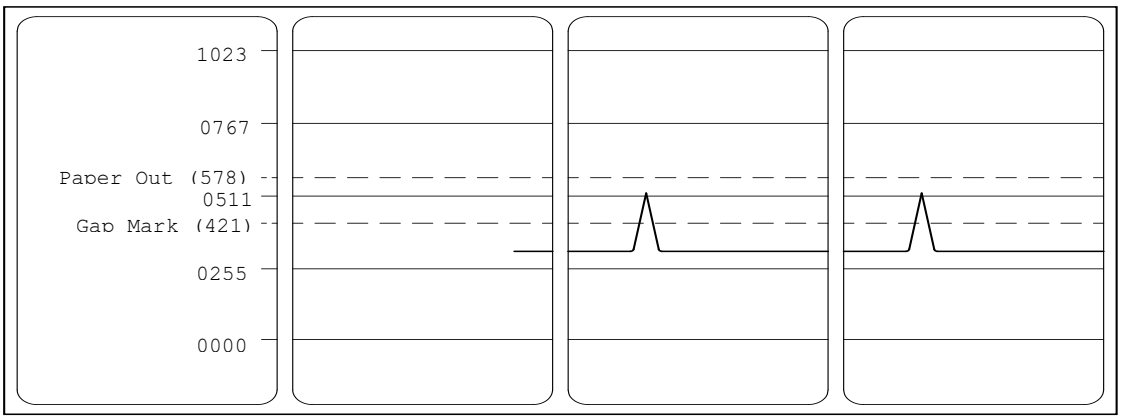

Figure 1 Media Profile Printout

Gap Sensing

This figure shows a Media Profile printout of a RFID label where the Gap/Mark Sensor is set to Gap in the *Sensors > Control* menu.

In this example, the gap threshold value the printer selected (represented by the Gap/Mark dotted line) is too close to the amplitude of the antenna pulse. This may cause the printer to falsely use the antenna as the gap (top-of-form).

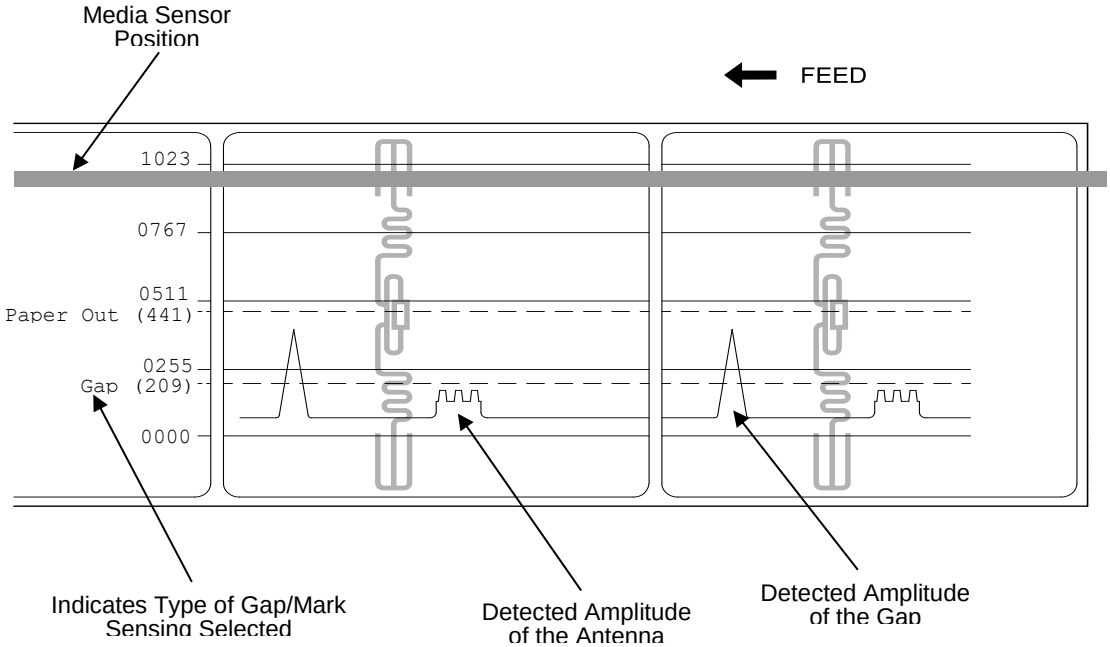

To avoid this problem, increase the Threshold Range value to 60% or 70% in the *Sensors > Control > Gap/Mark Thresh* menu (the default is 50%), then run a *Running Auto Calibrate* again, page 48.

Any changes to Threshold Range will not take effect until you run an Auto Calibrate again.

This will raise the Gap/Mark threshold high enough so that the printer will not falsely use the antenna as the gap (top-of-form).

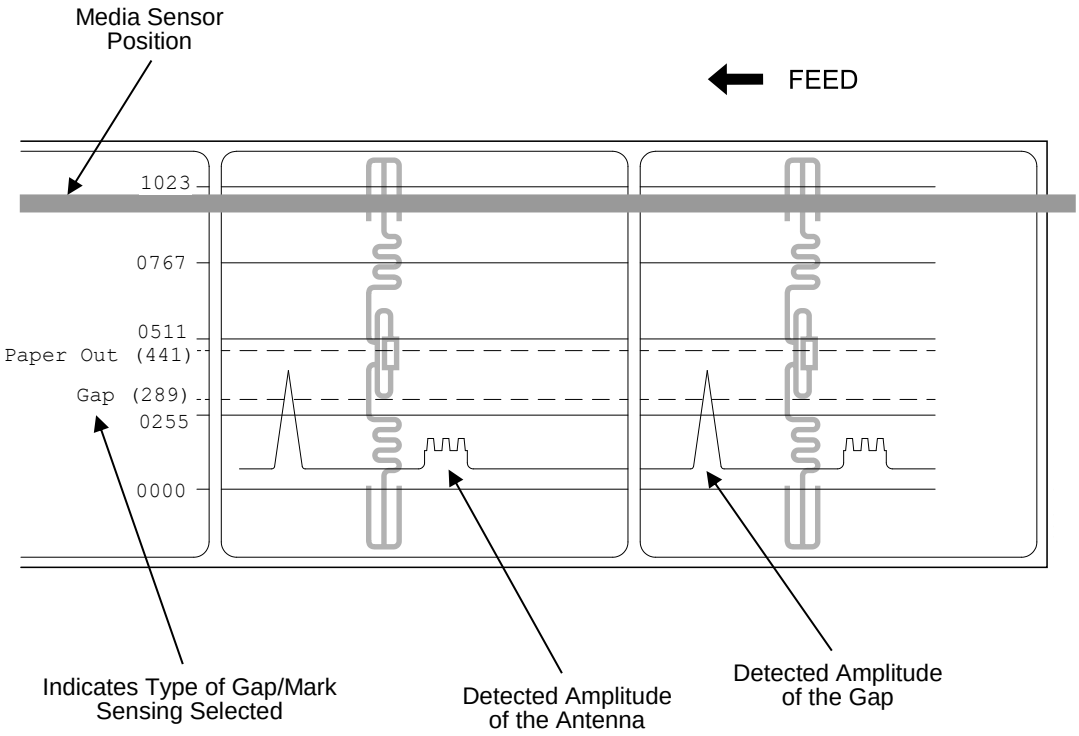
Media Sensor Position
FEED
1023
0767
0511
Paper Out (441)
Gap (289)
0255
0000
Indicates Type of Gap/Mark Sensing Selected
Detected Amplitude of the Antenna
Detected Amplitude of the Gap

Running Manual Calibrate

Manual Calibrate should be performed only when the values derived from Auto Calibrate fail to improve the media sensors' ability to sense label length indicators on the installed media. Manual Calibrate is located in the *Sensors* > *Diagnostics* section.

> **NOTE:** Verify the Gap/Mark Sensor option (Gap, Mark, or Disable) matches the installed media. See *Sensing Different Media Types* page 47.
>
> Ensure the media sensors are horizontally positioned to permit sensing of the label length indicators. See *Positioning the Media Sensors* on page 45.
>
> Ensure the *Media* > *Handling* > *Print Mode* option matches the media installed. Select "Direct" for heat sensitive media (no ribbon required) or "Transfer" for thermal transfer media (ribbon required).
>
> If you try to do a Manual Calibrate when Peel-Off Media Handling is enabled, the LCD will display a "CANNOT CALIBRATE" error. Before you can do a Manual Calibrate, you must select another media handling mode.

1. Press the PAUSE key to place the printer OFFLINE (Home Screen).
2. Find the Settings ICON and press ENTER.
3. Press the up and down arrow keys together until "ENTER SWITCH UNLOCKED" displays.
4. Find the Sensors ICON and press ENTER.
5. Select the "Diagnostics" submenu and press ↵ ENTER.
6. Find "Manual Calibrate" and then press ↵ ENTER to start the process.
7. Follow the instructions displayed on the LCD and press the ↵ ENTER key to move to the next step.
8. During the last step of Manual Calibrate, the printer will advance the media and attempt to detect the label length indicators and stop at the Top-of-Form position. The Sensed Distance value will then display for one second. The calibrate is successful when the Sensed Distance value correctly matches that of the installed media. If "CALIBRATION FAIL" error displays, run Manual Calibrate again.

   > **NOTE:** The amount of media sampled during Manual Calibrate is based on the length of a label and the transitions detected without error, between a label and its label length indicators.

9. Press the PAUSE key to place the printer OFFLINE (Home Screen).
10. Press the FEED key several times. Each time you press FEED, the media advances one label length and stops.

    > **NOTE:** After a form feed, the position of the leading edge of the next label depends on the type of Media Handling mode selected via *Media* > *Handling* > *Media Handling*. Tear-Off Strip Media Handling positions the label edge at the tear bar, while Continuous positions the label edge under the printhead.

11. Once the correct values are confirmed, save them to the desired configuration menu before powering off the printer. See *Saving a Configuration* page 58.

Calibrating RFID Media (Auto-Calibrate)

There is a second calibration required for RFID media once the media length has been calibrated. The auto-calibration feature determines the proper read/write levels and antenna location for the installed RFID media. Refer to the RFID Labeling Reference Manual for full instructions.

Cleaning

Depending on the media used, the printer may accumulate residues (media dust, adhesives, etc.) as a by-product of normal printing. To maintain top printing quality, you should remove these residues by cleaning the printer periodically.

WARNING **Set the printer power switch to O (Off) prior to performing any cleaning tasks. Leave the power cord connected to keep the printer grounded and to reduce the risk of electrostatic damage.**

IMPORTANT **When the printer is powered Off, menu settings that were changed and not saved an any print data remaining in the print buffer will be lost. To prevent the loss of recent menu changes, see *Saving a Configuration* page 58.**

CAUTION

- **Do not wear rings or other metallic objects while cleaning any interior area of the printer.**
- **Use only the cleaning agents recommended in this section. Use of other cleaners may damage the printer and void its warranty.**
- **Do not spray or drip liquid cleaning solutions directly into the printer. Apply the solution on a clean lint-free cloth and then apply the dampened cloth to the printer.**
- **Do not use canned air in the interior of the printer as it can blow dust and debris onto sensors and other critical components.**
- **Only use a vacuum cleaner with a nozzle and hose that are conductive and grounded to drain off static build up.**
- **All reference in these procedures for use of isopropyl alcohol requires that a 99% or greater isopropyl alcohol content be used to reduce the risk of moisture corrosion to the printhead.**

Exterior Cleaning

Clean the exterior surfaces with a clean, lint-free cloth. If necessary, use a mild detergent or desktop cleaning solution.

Interior Cleaning

Clean the interior of the printer by removing any dirt and lint with a vacuum cleaner, as described above, or use a brush with soft non-metallic bristles.

Cleaning the Printhead, Platen Roller, Media Sensors/Damper

NOTE: Even though the printhead, platen roller, media sensors and media damper are individually listed in these cleaning procedures, debris and adhesive on these components can ultimately travel to the printhead area and therefore should be cleaned and examined each time the printhead is cleaned and in the order shown.

Printhead Cleaning

As you use your printer, the printhead may become dirty with ribbon residue and label adhesives which can result in poor print quality. Keeping the printhead clean will help maintain its life.

- **Cleaning Agent** - Clean the printhead using a Genuine Printronix Printhead Cleaning Pen, or an Isopropyl Alcohol Wipe.
- **Schedule** - Clean the printhead each time you install a new roll of ribbon (thermal transfer print mode) or when you install a new roll or box of media (direct thermal print mode).

WARNING **If you have just been printing, allow one minute for the printhead to cool down to avoid burns from accidental printhead contact.**

CAUTION

- **Avoid electrostatic damage to the printhead by first making hand contact with an unpainted part of the printer frame or by using an anti-static wrist strap grounded to the printer frame.**
- **Do not use hard, sharp or abrasive objects to remove residue from the printhead.**
- **Do not touch the heating element surface of the printhead with your hands to avoid printhead corrosion. Any accidental skin contact with the element surface should be immediately followed by a thorough cleaning with a Printhead Cleaning Pen or an Isopropyl Alcohol Wipe.**
- **The heating element surface should be free from any condensation to avoid corrosion.**

- Rotate the blue deck lock lever clockwise to open the pivoting deck and remove the media and ribbon, if installed.
- Clean the printhead by gently rubbing an Isopropyl Alcohol Wipe or the felt tip of a Printhead Cleaning Pen across the printheads light brown heating elements area. Allow the printhead to dry for one minute before reloading ribbon or media.

NOTE: Even after a thorough cleaning with a Printhead Cleaning Pen or Alcohol Wipe, you may still see printouts with voids or streaks. This may be the result of baked-on ribbon resin that can be hard to remove when normal cleaning cycles are not maintained. Try using a Thermal Printer Cleaning Card 4”W x 6”L PN TSCCC-4-15. When using a cleaning card, follow the directions on the packaging.

Platen Roller Cleaning

Label parts, media dust, and adhesive residue on the platen can degrade print quality and cause voids in your label image.

- **Cleaning Agent** - Use an isopropyl alcohol wipe or small amount of isopropyl alcohol on a clean cloth to clean the platen roller.
- **Schedule** - Clean the platen roller each time you clean the printhead.

Clean the platen roller by first removing any label parts from its surface by hand. Then use an isopropyl alcohol wipe or clean cloth moistened with isopropyl alcohol to remove any remaining paper dust, debris, or label adhesive. The platen roller can be rotated forward by hand to access and clean its entire surface area.

NOTE: Even though power is removed from the platen motor, some drag will be felt as you rotate the platen.

- Check the platen roller for razor cuts, nicks, and gouges that may cause voids in the printed image. This type of damage usually requires platen roller replacement.

Media Sensor Cleaning

The upper and lower media sensors should be cleaned to ensure reliable Top of Form and Paper Out sensing.

CAUTION **Do not use isopropyl alcohol, solvents, or abrasive agents to clean the lower media sensor as they can damage the sensors lens cover.**

- **Cleaning Agent** - Use a brush with soft non-metallic bristles or a vacuum cleaner, described above, to remove paper dust.

NOTE: An Isopropyl Alcohol Wipe or Printhead Cleaning Pen can be used to remove label adhesive from the upper sensor.

- **Schedule** - Clean the media sensors each time you clean the printhead.

1. Brush away or vacuum any dust or debris from the upper and lower sensor.

Media Damper Cleaning

The media damper and its media width guides (see *Media Sensor Cleaning* page 54) can accumulate parts of labels, adhesive and paper dust residue that can prevent the proper guiding of labels.

- **Cleaning Agent** - Use an isopropyl alcohol wipe or isopropyl alcohol on a clean cloth.
- **Schedule** - Clean the media damper and its width guides each time you clean the printhead.

1. Clean the media damper by rotating it counterclockwise and remove any label parts from its bottom surface. Then use an isopropyl alcohol wipe or clean cloth moistened with isopropyl alcohol to remove all remaining debris and adhesive from the damper and its inboard and outboard guides.

IMPORTANT **All adhesive must be completely removed to prevent future die cut labels from being accidently peeled away from their liner.**

Cutter Option Cleaning

The cutter requires only periodic cleaning.

WARNING **Keep your fingers away from the cutter blades. They are sharp.**

Perform the following procedure whenever too much dust or debris is visible.

1. Set the printer power switch to O (Off).
2. Rotate the deck lock lever fully clockwise until the deck swings upward.
3. Remove the cutter top cover (6 inch width Cutter only) by loosening the two captive thumbscrews.
4. Place the cutter in the down (open) position (6 inch width Cutter only).
5. Use a vacuum or can of compressed air with a nozzle around the area of the cutter blade to remove any dust or debris.
6. Use a cloth with a light amount of WD-40 oil to clean adhesive from the cutter blade and upper or lower stainless steel cutter guides. Adhesive oil must be cleaned from the blade and guides with a dry cloth to prevent dust attraction.

CAUTION **Do not use isopropyl alcohol to clean the cutter blade – it dissolves oils required for lubrication.**

7. Place the cutter in the up (closed) position (6 inch width Cutter only).
8. Install the cutter top cover and tighten the two captive thumbscrews (6 inch width Cutter only).
9. Properly route the media through the printer and cutter.
10. Close the pivoting deck and rotate the deck lock lever fully counterclockwise.
11. Set the printer power switch to | (On).
12. Test the printer cutting operation by running a test print within the *Tools > Print Tests > Run Test* menu.

3 Configurations

Overview

This chapter provides information about:

- Setting, saving, modifying, and printing configurations
- Structure of the configuration
- Menu and Configuration Parameters

Setting Printer Configuration Parameters

Configuration parameters are set from the control panel and stored into the printer's flash memory. The parameters define how the printer will respond to command and interface signals from the host computer.

The Settings section is where the complete set of menus or configuration parameters are located. The T6000e menu system is three levels deep and consists of the ICON Level, View Level, and Edit Level.

The ICON Level. The top level of the menu system is known as the ICON Level and consists of two screens as shown below. The green shading shows the current icon selected. The arrow keys are used to select different icons (and even move between screens).

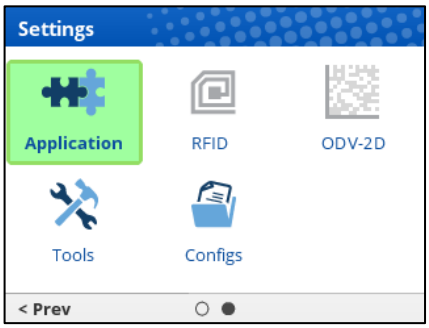

IMPORTANT **The ODV-2D and RFID icons are grey to symbolize that these options are not installed. When in grey, an icon cannot be selected.**

When the right icon is highlighted, the user must press ↵ ENTER to move into the **View Level**.

The View Level. The 2nd level of the menu system is known as the View Level and is separated into a left and right side. On the left side are submenus, and on the right are the actual menus or configuration parameters. The up/down arrow keys will move to different submenus (highlighted in green) and the right side will show a preview of the configuration parameters available for that submenu.

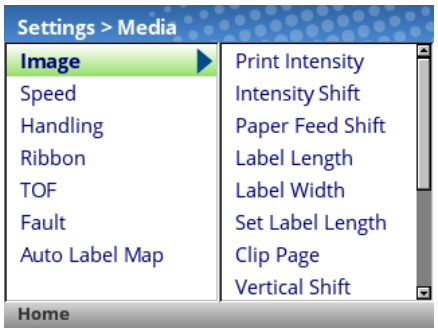

When the right submenu is highlighted, the user can press ↵ ENTER or the RIGHT ARROW key to move into the **Edit Level.** Likewise, the user can use the LEFT ARROW key to move back to the ICON Level.

The Edit Level. The last level of the menu system is known as the Edit Level and contains all the configuration parameters for a given submenu. The user can scroll through the menus using the up/down arrow keys to view the current configuration values.

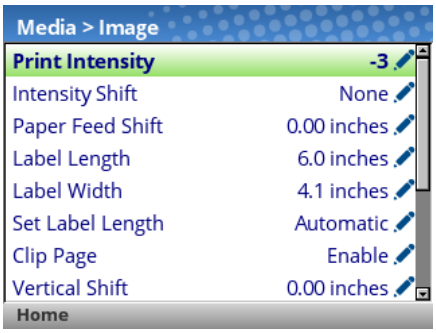

For menus that have the edit icon , the user can modify the value by pressing the ↵ ENTER key to enter **Edit Mode**. If the menu has a bolt icon, this is an executable menu and pressing the ENTER key will result in a particular action (e.g., running a print test, clearing statistics). If the menu does not have any icon, then it is a read-only menu and pressing ENTER key will not have any effect.

IMPORTANT **When entering the Edit Mode, a message "ENTER SWITCH LOCKED" may appear. In this case, the user will not be allowed to enter Edit Mode until the panel is unlocked. To unlock the configuration, press the UP+DOWN arrow keys simultaneously until you see the message "ENTER SWITCH UNLOCKED".**

In the Edit Mode, depending on the type of menu, the user may be given a pull-down menu of options or cycle through a set of numbers with an asterisk next to the current value. In cases where large numbers, strings, or network IP addresses must be entered, a virtual keyboard will be shown in which users can navigate to different characters or numbers. The examples below show Edit Mode with a pull-down menu and a virtual keyboard.

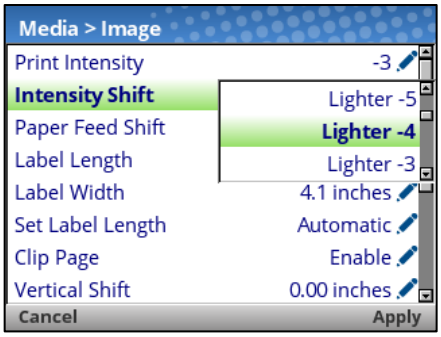

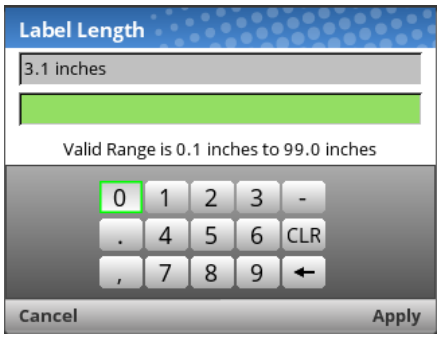

When users are in Edit Mode, they can change to new value by either pressing the ↵ ENTER key, or using the RIGHT SOFT key to “Apply”. Likewise, the users can exit Edit Mode without any modification to the menu by using the LEFT SOFT key to “Cancel” the operation.

For menus with an action icon, the user can execute the particular action by pressing the ↵ ENTER key. For menus without any icon, these are read-only menus and cannot be modified.

IMPORTANT **Some sensitive menu operations require the user to confirm they want to proceed. For example menu operations that clear logs, delete configuration, delete files, etc. In these cases, a message will appear on the screen asking them to confirm by pressing “OK” with one of the soft keys.**

Users can return to the **View Level** by pressing the LEFT ARROW key or go to the Home menu screen by using the LEFT SOFT key labeled “Home”.

NOTE: Changing menu values as described in this section only changes the Current Configuration. The Current Configuration is stored in DRAM and is in effect only while the printer is powered on. To store a configuration permanently into FLASH memory, see *Saving a Configuration* page 58 in the next section.

Saving a Configuration

When you make a change to the configuration menus, your changes reside in the Current Configuration saved in DRAM. The Current Configuration is in effect while the printer is powered on.

If you want to save your configuration permanently into FLASH memory, then you have two options:

- Save the configuration by following the instructions within the **Auto Save** feature when you return to the ONLINE state.
- Select the Configs icon under Settings and save the configuration with *Configs* > *Control* > *Save Config*.

Your printer by default has a Factory Configuration. You can save up to eight different configurations to meet unique print job requirements. Using the *Configs* > *Control* section, you can save, load, print, delete, and choose which configuration will be active at power-up.

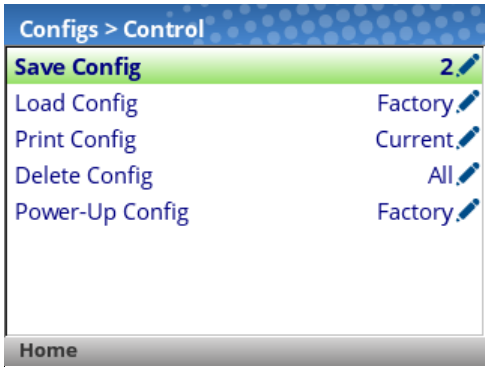

Auto Save Configuration

If you make any changes to the current configuration menu items and do not save them manually via the *Configs* > *Control* > *Save Config* menu, you will be prompted to save the changes just before you place the printer ONLINE with the screen shown below.

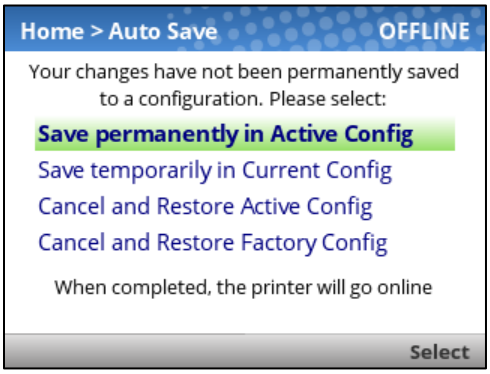

The **Active Configuration** is defined as the power-up configuration or last loaded configuration. There are three possible cases with this choice depending on the state of the printer:

- If the Active Configuration is one of the eight user-defined configurations, the Active Configuration will be saved and made the Power-Up Configuration.
- If the Active Configuration is the Factory Configuration, the printer will save the configuration to the first free (unsaved) configuration and make that open configuration the Power-Up Config.
- If the Active Configuration is the Factory Configuration and there are no free (unsaved) configurations, then the user will be informed with a message and asked to save the changes manually. The printer will return to the Home Screen.

The **Current Configuration** is the configuration stored in DRAM. If the user selects this option, the configuration will not be saved into FLASH memory permanently but will continue to be active.

The user also has the option of cancelling their changes by loading either the Active Configuration or the **Factory Configuration**.

Once the selection is made, the user will return to the ONLINE state automatically.

Naming Configurations

You may specify a 15-character name which can be used to refer to a configuration in *the Configs* > *Custom* section. The name you enter for a configuration will then be used everywhere within the Config section. The names can be cleared by using the *Configs* > *Custom* > *Reset Cfg Names* menu.

When a configuration to name is selected, a virtual keyboard will be provided for the user to enter the name desired. The navigation keys can be used to find characters with the ENTER button used to select them. When the string is complete, the user should use the RIGHT SOFT key labelled “Apply”.

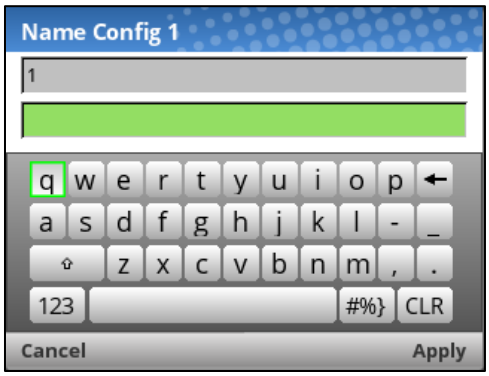

Loading a Configuration

You can specify any one of the nine configurations (1-8 or Factory) to load into DRAM using the *Configs* > *Control* > *Load Config* menu. If the selected configuration has not been saved, the user will be warned with a “CONFIG DOES NOT EXIST” message on the panel.

Specifying a Power-Up Configuration

You can specify any one of the nine configurations (1-8 or Factory) as the power-up configuration using the *Configs* > *Control* > *Power-Up Config* menu. If the selected configuration has not been saved, the user will be warned with a “CONFIG DOES NOT EXIST” message on the panel.

Modifying a Saved Configuration

Configurations can be modified and saved (updated) as often as desired. You can load a configuration of choice with *Configs* > *Control* > *Load Config*, change the menu or configuration parameter of interest and either use the Auto Save feature or return to the *Configs* > *Control* > *Save Config* menu to save the changes.

Viewing the Current Configuration

The Current Configuration can be easily viewed on the control panel by selecting the RIGHT SOFT key labeled “Info” on the Home screen. This will provide the same information in a Configuration Printout except it is viewable on the control panel.

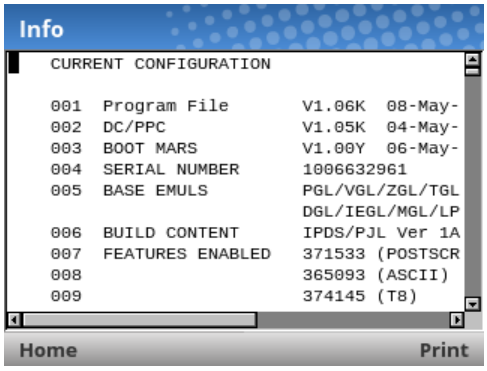

As can be seen from the picture, the user can scroll through the configuration values and choose to print the configuration using the RIGHT SOFT key labelled “Print”.

Printing a Configuration

We recommend that you print and store all saved configurations for future reference. The printout provides a list of the parameters that were set when you configured the printer. Configuration can be printed using the *Configs* > *Control* > *Print Config* menu. That menu has the following options:

- Current (the default)
- Factory
- Power-Up
- All
- Saved Configurations 1-8

Settings Organization

This section will show how the configuration menus are organized under the icons in the Settings section.

Screen #1		
Quick Setup Media Sensors Application Configs Admin User	**Media** Image Speed Handling Ribbon Top of Form Faults Auto Label Map	**Sensors** Control Calibrate Diagnostics
System Control Energy Star Flash File View/Edit SD File View/Edit[1] USB File View/Edit[1] Printer Mgmt Date GPIO[2]	**Host I/O** Control Centronics[6] IEEE-1284[6] USB Serial Host USB[11]	**Network** Control Ethernet[8] WLAN[7] WLAN Params[7] WLAN EAP[7]
Screen #2		
Application Control PS/PDF Setup[3] IPDS Setup[4] TN 5250 Setup[5] PGL … MGL Setup LP+ Setup P-Series … Setup Fonts	**RFID[9]** Control Tag Calibration Calibration Params RFID Chip Params Profiling Tools Diagnostics Statistics	**ODV-2D[10]** Control Symbology Grading Calibrate Diagnostics Statistics
Tools Print Tests Diagnostics Advanced PTF Debug PTF Flags Statistics About	**Configs** Control Custom	

NOTES:

[1] The SD and USB related submenus will only show when the SD card or USB drive is installed.
[2] The GPIO section will be included when the GPIO option is installed.
[3] PS/PDF shows up when *System* > *Control* > *Program Select* is set to PS/PDF.
[4] IPDS can be activated when *System* > *Control* > *Program Select* is set to IPDS/PGL..MGL.
[5] TN 5250 shows up when *System* > *Control* > *Program Select* is set to TN5250.
[6] Parallel is an option and these submenus are included only when Parallel is installed.
[7] WLAN is an option and these submenus are included only when WLAN is installed.
[8] Ethernet menu is not available if WLAN option is installed unless an Ethernet cable is attached at power-up.
[9] RFID is only available when the RFID option is installed. Refer to the *RFID Labeling Reference Manual* for information on these menus.
[10] ODV-2D is only available when ODV option is installed. Refer to the *Online Data Validator User's Manual* for information on these menus.
[11] Only is shown when a scale, scanner, or other data device is plugged into the Host USB.

Quick Setup

Quick Setup is a collection of the most typical setup parameters from different sections gathered in one place. It is designed to help the users quickly find these parameters and get the printer installed and running.

There is also a feature called "Admin User" that administrators can use to restrict users to the Quick Setup functionality and not allow them to go into the other sections. Under the Admin User subsection of Quick Setup, the administrator can setup a password (1-10 digits) and enter "Safe Mode" which will then hide all the other icons, leaving only Quick Setup. Safe Mode can be disabled by entering the password only.

Menu Items

The menu items under Quick Setup are the following:

Quick Setup Menu	Description / Location of Menu
Media	
Print Intensity	Media > Image > Print Intensity
Print Speed	Media > Speed > Print Speed
Media Handling	Media > Handling > Media Handling
Paper Feed Shift	Media > Image > Paper Feed Shift
Label Width	Media > Image > Label Width
Label Length	Media > Image > Label Length
Vertical Shift	Media > Image > Vertical Shift
Horizontal Shift	Media > Image > Horizontal Shift

Quick Setup Menu	Description / Location of Menu
Sensors	
Gap/Mark Sensor	Sensors > Control > Gap/Mark Sensor
Auto Calibrate	Sensors > Calibrate > Auto Calibrate

Quick Setup Menu	Description / Location of Menu
Application	
Active IGP Emul	Application > Control > Active IGP Emul
XXX Diagnostics	Application > Control > XXX Diagnostics
Validator Active*	Validator > Control > Validator Active
RFID Active*	RFID > Control > RFID Active
IMPORTANT	**The Application submenu is NOT available when System > Control > Program Select is set to PS/PDF.**

* Menu available only when Validator is installed

Quick Setup Menu	Description / Location of Menu
Configs	
Save Config	Configs > Control > Save Config
Power-Up Config	Configs > Control > Power-Up Config
Load Config	Configs > Control > Load Config

Quick Setup Menu	Description / Location of Menu
Admin User	
Set Password	Only available in Quick Setup when not in Safe Mode.
Enter Safe Mode	Only available in Quick Setup when not in Safe Mode.
Exit Safe Mode	Only available in Quick Setup when in Safe Mode.

Entering Safe Mode

Safe Mode is an optional feature that administrators can use to restrict access to the printer menus and settings. The additional benefit of this mode is that once the complete setup has taken place, administrators can enable this feature to make it easier for daily users to find and change the most typical menus.

By default, the printer is not in Safe Mode. The administrator enables Safe Mode by going into *Quick Setup > Admin Users* section and doing the following:

- Setting up a Password via *Quick Setup > Admin Users > Set Password.*
- Entering Safe Mode via *Quick Setup > Admin Users > Enter Safe Mode.*

The password can be any string of 1-10 digits. See the screenshots below on how this is done and what to expect. Note that once the password is set, it will display when not in Safe Mode.

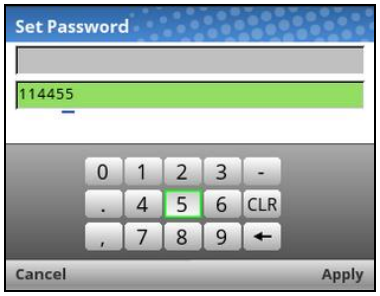

Exiting Safe Mode

When the administrator wants to exit safe mode, they will also need to return to *Quick Setup* > *Admin Users* section and entering the Password via *Quick Setup* > *Admin Users* > *Exit Safe Mode.* If the wrong password is entered, the following screen be shown.

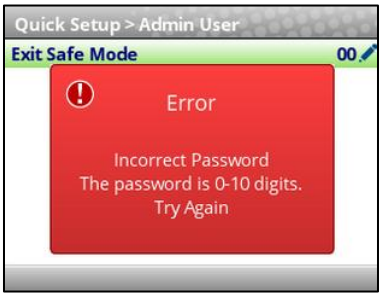

There is no lockout if you enter the wrong password several times, so you can continue to try. If you cannot find or remember the password, then see section “Forgot the Password” on page 65.

Forgot the Password

If you forget the password to exit Safe Mode, then contact your Printronix Customer Support team for more help unlocking the printer.

Media

IMPORTANT **All distances under Media can be represented in inches or millimeters based on the menu *System* > *Control* > *Media Units*.**

Intro: Label Length

Understanding your media and application is very important when configuring the parameters in the menu system. When setting label length, consider the following:

Label Length can be manually entered via the control panel *Media* > *Image* > *Label Length* menu or sent via the host application (e.g., PGL job) using the appropriate software command. If sent via a software command, that is referred to as a **Host Form Length** or **Logical Label Length**.

A Host Forms Length (Label Length) value sent from the host computer can override *Media* > *Image* > *Label Length* value if the emulation chooses to do so. Often, the emulations will have a menu to configure that behavior (e.g., *Application* > *PGL Setup* > *Host Form Length*).

Physical Label Length is the actual measurable length of the label. The following list of different media types explains how the physical label lengths are determined:

- **Die-cut labels** – measurable length of the removable label (leading edge to trailing edge). This does not include the liner material or gap.

- **Tag Stock with notches or holes** – measurable length from the trailing edge of one notch or hole to the leading edge of the next notch or hole.
- **Tag Stock with black marks on underside** – measurable length from the leading edge of one black mark to the leading edge of the next black mark.
- **Continuous media (no label length indicators)** – measurable length should be within ± 1-2% the Label Length value entered in the *Media* > *Image* > *Label Length* menu or the value sent via host software command.

Logical Label Length (or **Host Forms Length**) is the length that a user or programmer bases his printable image on. In most cases this length should be slightly less than the Physical Label Length. This allows the entire image to be printed within the boundaries of the label length indicators (gaps, notches, holes, or black marks).

When the Logical Label Length is greater than the Physical Label Length and *Media* > *Image* > *Clip Page* is "Enable", the printer will clip the bottom portion of the image that exceeds the Physical Label length. In this case, the printable data that was not printed will be lost. There is more on **Clip Page** menu in the next section.

Intro: Clip Page

The media sensor looks for the gap, notch, hole, or black mark only after the media has advanced the distance specified by the *Media* > *Image* > *Label Length* menu or by the Host Forms Length coming from the application. Any gaps, notches, holes, or black marks that exist prior to reaching the Label Length or Host Forms Length value are ignored.

When *Media* > *Image* > *Clip Page* is "Disable", Mark and Gap media sensing reliability can be improved and the sensor problems described below can be fixed:

- The image starts to print at an erroneous distance from the top-of- form, especially towards the end of a roll where the media is severely curled or scalloped.
- The image is incorrectly positioned as a result of the media sensor triggering off of a dark, pre-printed image on the label or multiple gaps within the label.
- The printer starts to print one label and then another all on the same physical label, especially at the end of a roll where the media is severely curled.
- An occasional blank label appears within a print job (in between printed labels).

When Clip Page is "Disable", the printer ignores any pre-printed dark marks or multiple gaps on a label that could mistakenly be detected as the next top-of-form position based on the specified *Media* > *Image* > *Label Length* value.

IMPORTANT **When Clip Page is "Disable", the correct *Media > Image > Label Length* value must be entered. If the value is too long, the printer will ignore the actual gap or mark it needs to detect.**

- When using Gap sensing, the Label Length value is equal to the physical length of a die cut or removable label.
- When using Mark sensing, the Label Length value is the physical distance from the leading edge of one black mark to the leading edge of the next black mark.

When the Logical Label Length is greater than the Physical Label Length and Clip Page is "Disable", the printer will continue to print the image onto the next physical label and ignore the gap or mark based on the *Media* > *Image* > *Label Length* value.

When the Logical Label Length is less than the Physical Label Length, the printer will print the entire image and leave blank space the remaining length of the physical label as it advances to the Top-of-Form of the next label. This is true regardless of the *Media > Image > Clip Page* setting.

Media > Image

Media > Image > Print Intensity	
This option specifies the level of thermal energy from the printhead to be used for the type of media and ribbon installed. Large numbers imply more heat (thermal energy) to be applied for each dot. This has a significant effect on print quality. The print intensity and speed must match the media and ribbon type to obtain the best possible print quality and barcode grades.	
Minimum	-15
Maximum	+15
Factory Default	-3
IMPORTANT	**The actual print intensity is the sum of both the Print Intensity menu and the Intensity Shift menu. For example, if Print Intensity = 5 and Intensity Shift = -3, then the actual print intensity used is 2. However, the actual intensity is bounded with a minimum of -15 and maximum of 20.**

Media > Image > Intensity Shift	
This menu can be used to shift Print Intensity settings higher or lower. This allows for higher print intensity settings for certain media while maintaining a compatible Print Intensity value set by the host job. It can also be used to make slight adjustments for compatibility with other emulations.	
Minimum	Lighter -9
Maximum	Darker +9
Factory Default	0
IMPORTANT	**While the shift can swing -9 to +9, the actual print intensity value is bounded with a minimum of -15 and maximum of 20.**

Media > Image > Paper Feed Shift	
This option represents the distance to advance (+ shift) or pull back (– shift) the stop position of a label when Tear-Off Strip, Peel-Off, or Cut Media Handling option is enabled. Allows .01 inch increments.	
Minimum	-1.00 inches
Maximum	Current Label Length (or 12.80 inches maximum)
Factory Default	0.00 inches
IMPORTANT	**The pull back (- shift) will be limited to the print line position in order to prevent media from being pulled back beyond the print head and falling off the platen roller**.

Media > Image > Label Length	
This option specifies the user-selected Label Length. In most applications, the user-selected Label Length will match the *physical* label length. Physical label length is the actual label length of the media installed: Die-cut Labels: Measurable length of the removable label (leading edge to trailing edge). This does not include the liner material or gap. Tag Stock with notches or holes: Measurable length from the trailing edge of one notch or hole to the leading edge of the next notch or hole. Tag Stock with black marks on underside: Measurable length from the leading edge of one black mark to the leading edge of the next black mark. Continuous media (no label length indicators): Measurable length should be within ± 1-2% the Label Length value here or the value sent via host software command.	
Minimum	0.1 inches
Maximum	99.0 inches
Factory Default	T6x04: 6.0 inches T6x06: 4.0 inches
IMPORTANT	**This menu can be overridden by the host job (Host Form Length) and set to values that do not match the physical length. For a full description of how Label Length behaves, see the section *Intro: Label Length*.**

Media > Image > Label Width	
This option specifies the physical width of the image to be printed.	
Minimum	0.1 inches
Maximum	Maximum based on printer model/printhead.
Factory Default	T6x04: 4.1 inches T6x06: 6.6 inches

Media > Image > Set Label Length	
This feature selects whether the Sensed Distance value derived from an Auto or Manual Calibrate will be used to set the Label Length menu. If no calibration is performed, this menu has no effect.	
Manual	The Sensed Distance will not override or change the Label Length value.
Automatic	The Sensed Distance value will override and change the Label Length value. If *Sensors Control* > *Gap/Mark Sensor* = Gap, the printer will subtract the *Sensors* > *Calibrate* > *Gap Length* value.
Factory Default	Automatic
IMPORTANT	**For Automatic setting, the *Sensors* > *Calibrate* > *Use Label Length* is ignored (treated as disabled).**

Media > Image > Clip Page	
This option determines how the printer handles images that are too large for one physical page length when using gap or black mark media.	
Disable	When the user-selected page length (logical length) is greater than the physical page length dictated by the gap, notch, hole, or black mark on media, the printer continues to print the remaining excess data onto the next physical page.
Enable	The printer clips any excess data to fit the physical page. The excess data is lost. The media sensor constantly looks for the gap, notch, hole, or black mark and when detected, uses it as the TOF position for the next label and clips any remaining data.
Factory Default	Enable
IMPORTANT	**See *Intro: Clip Page* 66 for more explanation when this menu option is disabled.**

Media > Image > Vertical Shift	
This option specifies the amount to shift an image vertically up (-) or down (+) for precise positioning on the label. The actual height of the image is not affected by this parameter. The adjustment is made in .01 inch increments.	
Minimum	-1.00 inches
Maximum	Label Length (max 12.80 inches)
Factory Default	0.00 inches

Media > Image > Horizontal Shift	
This option specifies the amount to shift an image horizontally left (-) or right (+) for precise positioning on the label. The actual width of the image is not affected by this parameter. The adjustment is made in .01 inch increments.	
Minimum	-1.00 inches
Maximum	1.00 inches
Factory Default	0.00 inches

Media > Image > Orientation	
This menu item selects the image orientation to be used when printing the label. See picture below for an illustration.	
Portrait	Portrait refers to vertical page orientation, where the top of the page is at the leading edge.
Landscape	Landscape is a rotation of the logical page at 90 degrees clockwise from Portrait.
Inv. Portrait	Inverse Portrait is a rotation of the logical page at 180 degrees from Portrait.
Inv. Landscape	Inverse Landscape is a rotation of the logical page at 270 degrees clockwise from Portrait.
Factory Default	Portrait
IMPORTANT	**The orientations shown here are with Print Direction set to Head First. Some IGP Emulations such as ZGL use Foot First. In that case, the orientations would be 180 degrees different for all selections shown here.**
	This menu is NOT available when System > Control > Program Select is set to PS/PDF.

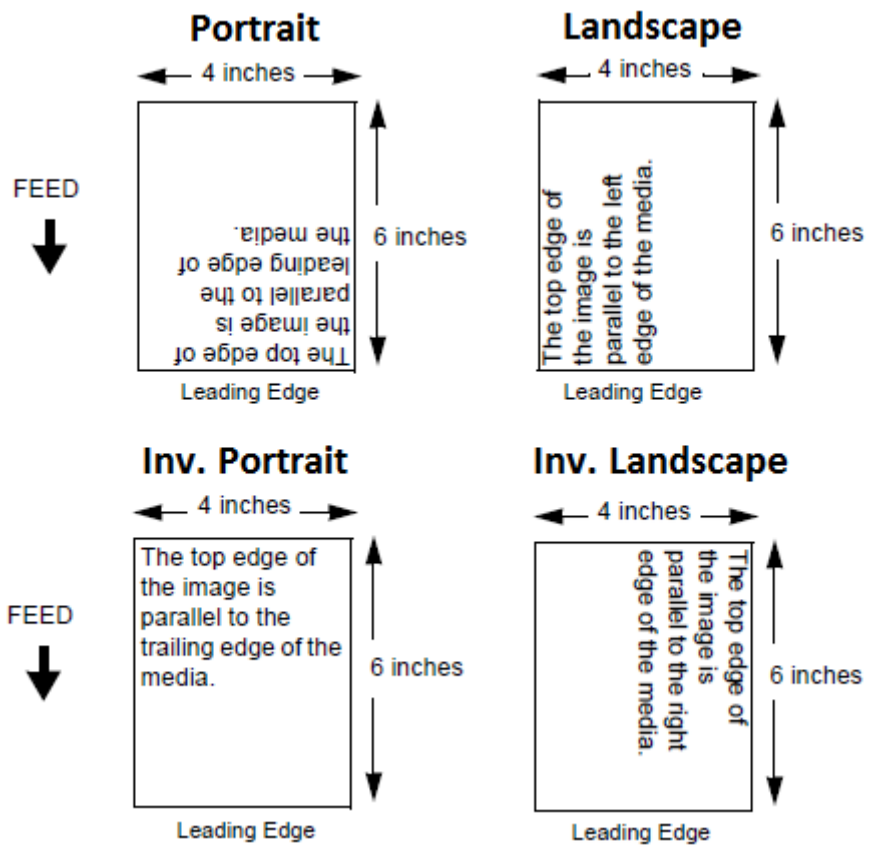

Media > Image > Print Direction	
This option is the compass for print orientation. Not all IGP Emulation languages have the same definition of Portrait, Landscape, etc. The illustration below shows how Portrait is defined for both Head First and Foot First.	
Head First	With Orientation set to Portrait, the top of the label will come out of the printer first.
Foot First	With Orientation set to Portrait, the bottom of the label will come out of the printer first.
Factory Default	Head First for PGL, but Foot First for ZGL. It will automatically be set for plug'n play compatibility.
IMPORTANT	**Print Direction will not change the orientation of any print test patterns in the *Tools* > *Print Tests* menu.**
	This menu is NOT available when System > Control > Program Select is set to PS/PDF.

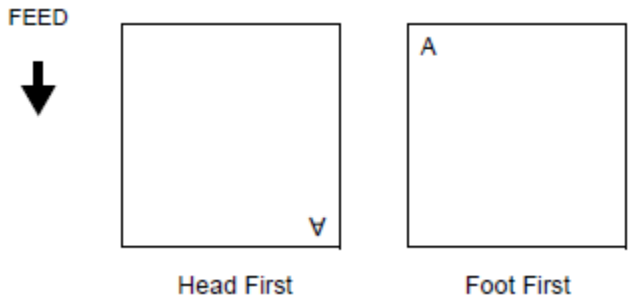

Media > Image > Vertical DPI Adj	
Adjusts the vertical print resolution. This can be used to compress or expand all printed forms by small amounts.	
Minimum	195 (203 DPI) 290 (300 DPI) 580 (600 DPI)
Maximum	210 (203 DPI) 310 (300 DPI) 620 (600 DPI)
Factory Default	Match Head DPI

Media > Speed

Media > Speed > Print Speed	
This option specifies the speed in inches per second (ips) at which the media passes through the printer while printing.	
Minimum	1 ips
Maximum	T62x4: 14 ips, T63x4: 12 ips, T66x4: 6 ips T62x6: 12 ips, T63x6: 10 ips
Factory Default	6 ips

Media > Speed > Reverse Speed	
This option sets the speed at which the media moves in reverse direction.	
Minimum	1 ips
Maximum	6 ips
Factory Default	2 ips
IMPORTANT	**Speeds above 2 ips may cause ribbon smudging depending on ribbon and media.**

Media > Speed > Slew Speed Control	
Controls how slew speed is chosen. By default, it will match *Print Speed*.	
Automatic	Always the same as the print speed.
Manual	Allows you to set the slew speed independently from Print Speed by unhiding the *Media > Speed > Slew Speed* menu.
Factory	Automatic
IMPORTANT	**This menu will only show when the Validator option is installed and the Validator is enabled.**

Media > Speed > Slew Speed	
When the *Media > Speed > Slew Speed Control* is set to Manual, this menu is unhidden. The range and defaults are consistent with *Print Speed*.	
Minimum	Same as Print Speed minimum
Maximum	Same as Print Speed maximum
Factory Default	Same as Print Speed
IMPORTANT	**Only available when Media > Speed > Slew Speed Control is set to Manual.**

Media > Handling

Media > Handling > Print Mode	
This option specifies the type of printing to be done.	
Transfer	Indicates Thermal Transfer printing (ribbon installed).
Direct	Indicates Direct Thermal printing (no ribbon) and requires special heat sensitive media.
Factory Default	Transfer

Media > Handling > Media Handling	
This option specifies how the printer will handle the media (labels or tag stock).	
Tear-Off Strip	Printer prints on the media and sends it out the front until the print buffer is empty, then positions the trail edge of the last label over the tear bar for removal. This selection requires media length 1.96” inches or longer.
Peel-Off	Prints and peels die-cut labels from the liner without assistance. The printer waits for you to take away the label before printing the next one (on-demand printing). When the optional internal rewinder is installed with liner attached, a “Remove Label” message will display to remind you to remove the label before the next one can be printed. See the *Label Peel-Off* and *Media > Handling > Peel Present* tables for more information. The error message “INCOMPATIBLE WITH CUTTER” displays if this mode is selected when the optional cutter installed.
Cut	When the optional media cutter is installed, it automatically cuts media after each label is printed or after a specified number of labels have been printed when a cut command from the host has been issued. It cuts continuous roll paper, labels, or tag stock. The error message “OPTION NOT INSTALLED” displays if this mode is selected when the optional cutter is not installed.
Continuous	Printer prints on the media and sends it out the front. See *Media > Handling > Continuous Mode* table for more information.
Factory Default	Tear-Off Strip
IMPORTANT	The printer makes an additional move backwards for speeds above 10 ips which may not be not desired.

Media > Handling > Continuous Mode	
Allows selection of special media modes when Continuous Media Handling mode is selected.	
Standard	Labels are printed and sent out the front. The cross perforation following the last printed label is not aligned at the tear bar. No auto feeding of a blank label should exist between print jobs, but you may need to press the FEED key to move approximately .80 inches of the last printed label from under the printhead. If performed, this feed causes a blank label at the beginning of the next print job.
Tear-Off	Same as Standard, but the cross perforation following the last printed label is aligned at the tear bar. No blank label is needed to remove the last printed label. No blank label should exist between print jobs. A no print zone, .80 inches long, exists from the leading edge of each printed label. This option supports media lengths 1.96” inches or longer.
Tear Strip Full	Same as Standard, but the cross perforation following the last printed label is automatically aligned at the tear bar once the print buffer is empty for a period of Tear-Strip Time. (Media does not get aligned at tear bar until Tear-Strip Time expires.) When printable data is again detected, a blank label is automatically fed, resulting in one blank label between each print job. This option supports label lengths 2.50 inches or longer. Shorter label lengths cause two or more blank labels to be automatically fed at the beginning of each print job.
Cut Strip	When Media Handling is set to Continuous and a cutter is installed, Cut Strip will use the respective host interface Timeout menu setting to determine the End Of Job (EOJ) and cycle the cutter. That is, the cutter will be cycled when there is no more data being received from the host. The cut will not be done for printing that is not initiated by the host such as form feeds and test printing or if the host interface is not set to Auto Switching.
Factory Default	Standard

Media > Handling > Peel Present	
This feature allows you to select which part of a label gets presented to the peel bar.	
Next TOF	Media is moved to next TOF after image printing before presenting media to the peel-off position. This option is for standard labels where the gap/mark length is less than the printhead to peel bar distance (about 1/2 inch).
End of Form	Media is moved to the end of form after image printing before presenting media to the peel-off position. This option is for labels that have wide gaps that result in labels falling off the peel bar. This setting works with non-mark media where the end of form is not the same as the next TOF. This setting is useful for die cut labels where the physical bottom of the label can be detected by the media sensor.
End of Image	Image prints and media moves to peel-off position. This option is for labels that have wide gap/marks that result in labels falling off the peel bar. This selection is intended for cases where presenting the next TOF or end of form still results in labels falling off the peel bar. This menu selection works best if the length of the image printed matches the physical length of the label.
Factory Default	Next TOF
IMPORTANT	**This menu only visible when the peel option is installed.**
IMPORTANT	**End of Image selection is affected by the Media > Image > Clip Page option.**

Media > Handling > Peel-Off Mode	
When Peel-Off Media Handling mode is enabled, this feature allows selection of two different media motions for automatic label peel-off.	
Fast	Reverse and forward media motion distance in Peel-Off mode is reduced, providing faster throughput. Primarily used for label lengths less than 2 inches long.
Standard	Provides standard reverse and forward media motion distance in Peel-Off mode to ensure sufficient rewinder tension.
Factory Default	Fast

Media > Handling > Pre-Peel Mode	
Pre-Peel Mode adds a forward and reverse motion to each label prior to printing. The added forward pre-peel motion temporarily breaks the die cut label from the liner, and the reverse motion places the label back on the liner prior to printing, peeling, or dispensing the label. Pre- Peel Mode is usually enabled only when using die cut labels with an aggressive adhesive that makes automatic label removal from the liner difficult.	
Disable	No motion.
Enable	Enables the forward and reverse motion prior to print.
Factory Default	Disable
IMPORTANT	**Only applies when Media Handling is set to Peel-Off and Peel-Off Mode is set to Standard.**

Media > Handling > Pre-Peel Adjust	
When Pre-Peel Mode is set to Enable, Pre-Peel Adjust represents the selectable distance that the label advances during Pre-Peel Mode. The Pre-Peel Adjust distance selected is automatically used when Pre-Peel Mode is enabled. Increments in 0.01 inches.	
Minimum	0.00 inches
Maximum	2.00 inches
Factory Default	1.00 inches

MEDIA > Handling > Cal in Peel Mode	
This option allows you to perform a calibration in Peel-Off Media Handling mode. Calibration in Peel-Off mode does not stop and wait for you to remove peeled labels. Therefore, be prepared to remove the labels as they are automatically peeled.	
Disable	Calibration from the panel when in peel mode is not permitted and a warning message will display.
Enable	Auto Calibrate can be performed from the front panel in peel mode.
Factory	Disable
IMPORTANT	**This menu only visible when the peel option is installed.**
IMPORTANT	**If this menu is set to Disable, then Power-Up Action = “Auto-Cal” is ignored.**

MEDIA > Handling > Label Wait Time	
Media Handling is set to Tear-Off Strip or Continuous (Tear Strip Full): Label Wait Time specifies the number of seconds after printing stops that the printer will wait before it advances media to the tear bar position. Media Handling is set to Peel-Off: Label Wait Time specifies the number of seconds the printer will wait after a label is removed from the peel/tear bar before starting to print the next label.	
Minimum	0.1 seconds
Maximum	60.0 seconds
Factory Default	1.0 seconds
IMPORTANT	**If the RFID option is installed and the Factory Configuration is the power-up default, this menu will automatically be changed to 1.0 seconds.**

Media > Ribbon

Media > Ribbon > Ribbon Low	
When enabled and the amount of ribbon remaining on the supply spindle is approximately 75 to 50 meters or less, a “Ribbon Low” warning will pop up on the ONLINE screen.	
Disable	No Ribbon Low warning will appear.
Enable	The Ribbon Low warning will appear when the ribbon on the supply spindle is 75 meters or less.
Factory Default	Disable

Media > Ribbon > Ribbon Out	
Sets the sensitivity to which ribbon out errors will be detected. If set to 0 yard, the minimum sensitivity will be applied. The maximum sensitivity will result in the ribbon out fault to be triggered as early as possible.	
Minimum	0 yard
Maximum	50 yards
Factory Default	0 yard

Media > TOF

Media > TOF > TOF Detect Fault	
Allows selection of three different TOF (Top-of-Form) detection faults. The printer displays a Gap Not Detected fault and stops printing when media has advanced a distance equal to X or more times *Media > Image > Label Length*.	
1 Label	The Gap Not Detected fault is declared after 1 label.
3 Labels	The Gap Not Detected fault is declared after 3 labels.
9 Labels	The Gap Not Detected fault is declared after 9 labels.
Factory Default	3 Labels
IMPORTANT	**The correct Label Length value, equal to the physical length of the installed label, must be entered in *Media > Image > Label Length*.**

Media > TOF > Ticket Save Mode	
This option determines the action of the media for Continuous (Standard), Tear-Off Strip and Cut Media Handling Modes after the printer is first powered up or after the printhead has been opened and then closed. When enabled, this option eliminates wasting label(s) or ticket stock when the printer advances media to search for the next TOF position. Option applies only to 0.5 inch or longer label lengths.	
Disable	The printer assumes that the media is not at the correct TOF position after cycling power or after the printhead is opened and then closed. Printing will begin only after the next TOF is detected. When disabling, *Sensors* > *Calibrate* > *Online Action* and *Sensors* > *Calibrate* > *HeadClose Action* will not be adjusted.
Enable	The printer will assume that media is at the TOF position after cycling power or after the printhead is opened and then closed. Printing will begin without advancing media to search for the next TOF position. When enabled, *Sensors* > *Calibrate* > *Online Action* and *Sensors* > *Calibrate* > *HeadClose Action* will automatically be set to Disable.
No Seek	The printer will assume that media is not at the TOF position after cycling power but is at the TOF position after the printhead is opened and then closed. After powering up, printing will begin only after the next TOF is detected. After opening the head, printing will begin without advancing media to search for the next TOF position. When enabled, *Sensors* > *Calibrate* > *Online Action* and *Sensors* > *Calibrate* > *HeadClose Action* will automatically be set to Disable.
Factory Default	Disable
IMPORTANT	**The user must ensure that media is at the correct TOF position (cross perforation, liner gap, notch or mark at the tear bar edge) before cycling power or before closing and locking the pivoting deck. In addition, media must be calibrated and the correct Media Handling Mode, Label Length and Gap/Mark Sensor selected and in Power-Up Config.**

Media > TOF > TOF Adjust Mode	
This option enables use of the Media > TOF > TOF Adjust Dist.	
Disable	The TOF Adjust Dist menu value will not be used.
Enable	The TOF Adjust Dist menu value will be used.
Factory Default	Disable

Media > TOF > TOF Adjust Dist	
This option sets the distance from the Top Of Form (TOF) that is left blank (unprinted) after a label has been removed in Tear-Off Strip mode. When this mode is enabled the start position for printing can be adjusted in increments of 0.01 inch. This adjustment can be helpful if a die cut label sticks to the platen by means of jagged edges created during a poor die cut label removal using the tear bar. By controlling how much blank space there is from TOF, you can control how much the media is called back after it is torn off.	
Minimum	0.00 inches
Maximum	0.40 inches
Factory Default	Match Head DPI
IMPORTANT	**Tear-Off Strip mode only**

Media > Fault

Media > Fault > Label Missing	
Allows the Label Taken Sensor to first detect the presence of a label at the peel bar.	
Disable	The printer does not generate a fault condition if a missing label is encountered.
Enable	Peel-Off Handling: The printer generates a fault condition if a missing label is encountered.
Factory Default	Enable

Media > Fault > Error Recover	
This option determines how the printer handles data that was printing when an error occurred.	
Disable	The printer will not reprint the label that was printing when the error condition occurred.
Enable	The printer reprints the label that was printing when the error condition occurred.
Factory Default	Disable

Media > Fault > Head Warning	
This option will disable or enable the head warning message on the front panel after the printhead usage reaches a level that suggests replacement.	
Disable	The printer will not issue a warning regarding the print head usage.
Enable	The printer will issue a warning regarding the print head usage.
Factory Default	Enable

Media > Auto Label Map

Media > Auto Label Map > Select	
This option specifies the maximum print width to be used by the application. The IGP/Auto Label Mapping® feature allows backward compatibility of programs written for Printronix line-matrix printers. It allows the printer to print two-up (or other multi-up) labels. Instead of printing multiple labels across the printer, it prints the leftmost label and the rightmost label, so the printout will be twice as long but half as wide.	
Disable	Excess data in any program sent to the printer with horizontally adjacent labels that exceed the physical page width of the printer will be clipped or wrapped depending upon how the emulation is designed.
Enable	The printer will automatically reposition the horizontally adjacent labels to a vertically adjacent position, or a combination of horizontal and vertical positions based on the values selected under the *Auto Label Width* and *Number Labels* menu items.
Factory Default	Disable

Media > Auto Label Map > Auto Label Width	
The width of a single label to be printed or the maximum width of the media that will be used for the print file. The value is selectable from 0.1 inch through the maximum print width of the printer.	
Minimum	0.1 inch
Maximum	*Media* > *Image* > *Label Width* value.
Factory Default	Depends on the model width.

Media > Auto Label Map > Number Labels	
The desired number of labels to be printed vertically adjacent on the form.	
Minimum	2
Maximum	40
Factory Default	2

Auto Label Map Examples

All of the examples below assume that the logical form length is set to the label length.

Example 1: Simple Case

Problem: A file has been constructed with two horizontally adjacent 4.0” labels for a printer with a physical width of 8.0”. The user now wants to use this file with a printer that has a 4.0” physical width.

Solution with Menu Settings:

- Set *Media* > *Auto Label Map* > *Auto Label Width* to “4.0” (the width of the label)
- Set *Media* > *Auto Label Map* > *Number Labels* to “2”
- Set *Media* > *Auto Label Map* > *Select* to “Enable”.

Printer Operation: The printer will print the first (leftmost) 4.0” label first on the first thermal label, followed by the second 4.0” label. These labels will be stacked vertically as shown in the diagram.

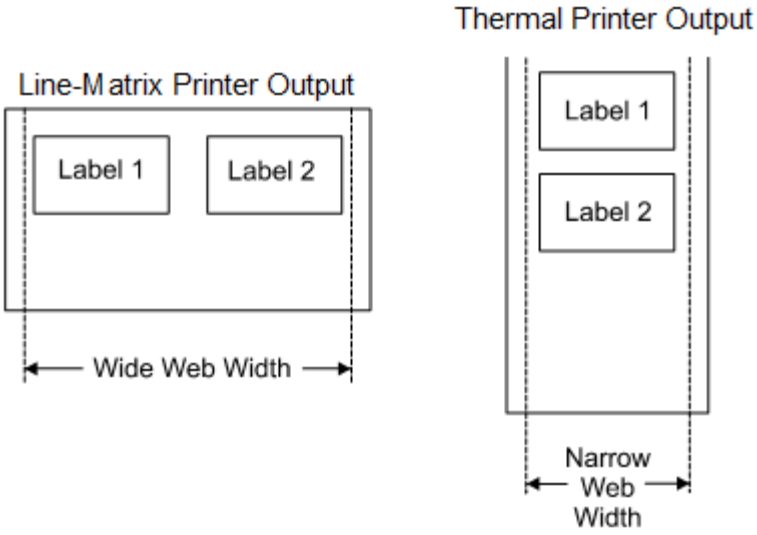

Example 2: Uneven Number Case

Problem: A file has been constructed with three horizontally adjacent 2.0" labels. The user now desires to use this file with a printer that has a 4.0" physical width.

Solution #1 with Menu Settings:

- Set *Media* > *Auto Label Map* > *Auto Label Width* to "2.0" (the width of two labels)
- Set *Media* > *Auto Label Map* > *Number Labels* to "2"
- Set *Media* > *Auto Label Map* > *Select* to "Enable".

Printer Operation for Solution #1: The printer will print the first two labels at the same time. These first two labels will be horizontally adjacent. Once these labels have been completed, the printer will print the remaining 2.0" labels along with a blank 2.0" label. See figure below.

Solution #2 with Menu Settings:

- Set *Media* > *Auto Label Map* > *Auto Label Width* to "2.0" (the width of two labels)
- Set *Media* > *Auto Label Map* > *Number Labels* to "3"

- Set *Media* > *Auto Label Map* > *Select* to “Enable”.

Printer Operation for Solution #2: The printer will print the first 2.0” label by itself, the second 2.0” label by itself, and finally, the last 2.0” label by itself. See figure below.

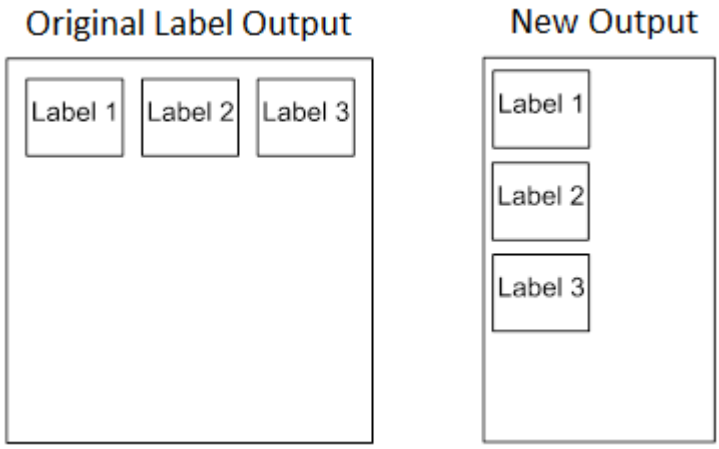

Example 3: Past Maximum File Width

Problem: A file has been constructed with three horizontally adjacent 4.0” labels. The user now desires to use this file with a printer that has an 8.0” physical width. The user should have used a solution similar to one of the solutions in the examples above, but the user erroneously enters an *Media* > *Auto Label Map* > *Auto Label Width* of “12.0” and a *Media* > *Auto Label Map* > *Number Labels* of “3”.

Printer Operation: The maximum *Number Labels = (20”/12”) = 1.67* rounded up to 2. The printer will automatically reduce the *Media* > *Auto Label Map* > *Number Labels* to “2”.

Example 4: Blank Label Case

Problem: A file exists with two horizontally adjacent 4.0” labels. The user now wants to use this file with a printer that has a 4.0” physical width. The user decides to set the *Media* > *Auto Label Map* > *Number Labels* to “3” and the *Media* > *Auto Label Map* > *Label Width* to “4.0” despite the fact that these values are not optimum.

Printer Operation: The maximum *Number Labels = (20”/4”) = 5*. The selected value of 3 is legal. After the file is sent, the printer will begin by printing the first 4.0” width label. Once that label is complete, it will print the second 4.0” width label. Finally, once both of those labels have been printed, the printer will print a blank 4.0” label.

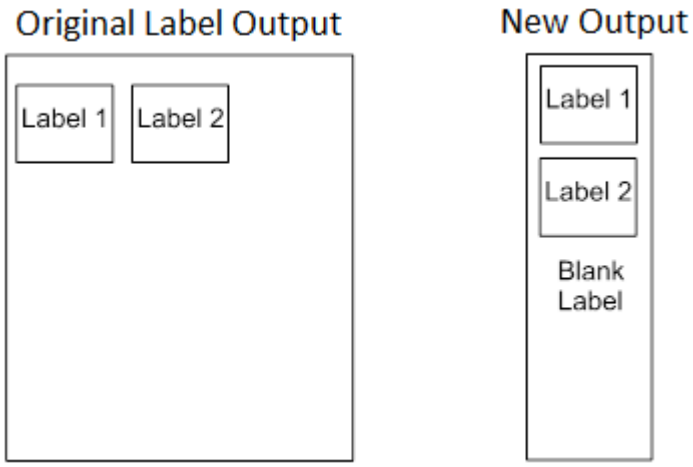

Sensors

Intro: Sensor Types

When making changes in this section, there are certain implications that need to be understood because some menus are intimately related. For example, when the menu *Sensors* > *Control* > *Gap/Mark Sensor* is changed, this has an effect on other menu defaults as shown in *Table 2*.

Table 2. Gap/Mark Sensor Effects on other Menu Defaults

Gap/Mark Sensor	Paper Out Sensor	Minimum Delta	Gap/Mark Thresh	Paper Out Thresh
Disable	Transmissive	N/A	N/A	1023
Mark	Transmissive	48	250	1023
Gap	Transmissive	80	689	1023

IMPORTANT **When sensors settings are changed, the user must calibrate .**

Sensors > Control

Sensors > Control > Gap/Mark Sensor	
The available options specify the sensor type needed for detecting the Top-of- Form position on media with label length indicators (gaps, notches, holes, or black marks).	
Disable	Select when using media with no label length indicators (no gaps, notches, holes, or black marks), or when you want the printer to ignore all existing label length indicators on the installed media.
Mark	Select when using media that has horizontal black marks located on the underside of the label liner, notch, hole or tag stock. The Top-of-Form position is the leading edge of the black mark.
Gap	The Top-of-Form position is the leading edge of the die cut label (trailing edge of the gap, notch, or hole).
Factory Default	Gap for non-RFID printers and Mark for RFID printers
IMPORTANT	**When you select Disable, the length of each label is based on the *Media > Image > Label Length* menu or the value sent within the application format.**
IMPORTANT	**If the RFID option is installed and powers up with the Factory Configuration, *Mark* will be selected.**

Sensors > Control > Auto Calibrate	
This executable menu is used to improve the sensitivity and reliability of the Media Sensors in detecting gaps, notches, holes, or black marks on the installed media, as well as a paper out condition. The operation is successful when the Sensed Distance displayed correctly matches that of the installed media. For Gap: The Sensed Distance should match the length from the trailing edge of one gap to the trailing edge of the next gap (one label + one gap). For Mark: The Sensed Distance should match the length from the leading edge of one black mark to the leading edge of the next black mark.	
IMPORTANT	**Prior to running Auto Calibrate you must enter the length of the installed media via the *Media* > *Image* > *Label Length* menus. Selecting the correct Label Length forces Auto Calibrate to increase media advancement for long labels (to detect actual gaps, notches, or marks) and decrease advancement for short labels.**
	Auto Calibrate supports label lengths up to 35 inches.

Sensors > Control > Sensed Distance	
This value represents the distance that was sensed between the TOF of one label to the TOF of the next label upon successful calibration. It is a read-only value. Gapped media: the distance equals the physical label length plus one gap, notch, or hole (trailing edge of one gap, notch, or hole to the trailing edge of the next gap, notch, or hole). Black mark media: the distance equals the leading edge of one black mark to the leading edge of the next.	
Setting	Automatically calculated upon calibration.
Factory	0.0 inches

Sensors > Control > Gap/Mark Thresh	
This menu item sets a value that, when exceeded by the output of the media sensor, is recognized by the printer as a gap (or black mark). Upon calibration, the value displayed is equal to the gap/mark threshold value set by the procedure. If running the procedure does not provide a reliable Top-Of-Form detection (e.g., when using unusual media), the Gap/Mark Thresh value can be manually set to the desired value.	
Minimum	0
Maximum	1023
Factory	See *Table 2*

Sensors > Control > Paper Out Thresh	
This menu item selects a value that, when exceeded by the output of the media sensor, is recognized by the printer as a paper out condition. Upon calibration, the value displayed is equal to the paper out threshold value set by this procedure. If running the procedure does not provide a reliable paper out detection, e.g., when using non-standard media, the Paper Out Thresh value can be manually set to the desired value.	
Minimum	0
Maximum	1023
Factory	See *Table 2*

Sensors > Calibrate

You can run Auto Calibration from the Home screen, this section, or the *Tools* > *Print Tests* > *Run Test* menu. Upon execution, the printer advances media the distance needed to accurately detect the label length indicators, then stops at the Top-of-Form position, and momentarily displays the Sensed Distance if successful. This process takes a few seconds to complete and results in changes to the values the printer uses in the *Sensors* > *Control* subsection for Gap/Mark Threshold, Paper Out Threshold, and Sensed Distance. These value changes take effect immediately within the current configuration menu.

Sensors > Calibrate > Auto Calibrate
See *Sensors* > *Diagnostics* > *Media Profile*

Sensors > Calibrate > Power-Up Action	
Calibration activities when the printer is powered up.	
Disable	No activities at power up.
Auto-Cal	Auto Calibrate is performed at power-up. Once the Auto Calibrate is complete, the printer will momentarily display the Sensed Distance determined by the Auto Calibrate.
Seek TOF	Assumes user has already calibrated media and used gap/mark sensor. This moves the media to Top-of-Form at power up if *Sensors* > *Control* > *Gap/Mark Sensor* is not set to Disable.
Factory	Auto-Cal
IMPORTANT	**If *Media* > *TOF* >*Ticket Save Mode* is set, Auto-Cal and Seek TOF will not be performed.**

SENSORS > Calibrate > HeadClose Action	
Selects whether the printer performs a selected action after a print head open fault condition is cleared.	
Disable	No media motion after a print head open fault condition is cleared.
Auto-Cal	Performs Auto Calibration every time the print head open fault condition is cleared.
Seek TOF	Moves the media to TOF (Top Of Form) when the printhead is closed unless *Sensors* > *Control* > *Gap/Mark Sensor* is set to Disable.. The media should already be calibrated using Gap/Mark sensor.
Factory	Disable
IMPORTANT	**If *Media* > *TOF* > *Ticket Save Mode* is set, Auto-Cal and Seek TOF will not be performed.**
	If there is data pending (data in buffer) when the head open fault is cleared, Auto-Cal and Seek TOF are ignored.

Sensors > Calibrate > Online Action	
Whenever the printer is brought ONLINE, it automatically performs an Auto Calibrate if enabled. This option should only be set before any data is sent to the printer.	
Disable	No Auto Calibration is performed when going ONLINE.
Auto-Cal	Once the Auto Calibrate is complete, the printer momentarily displays the Sensed Distance and then resumes printing any pending jobs.
Factory	Disable
IMPORTANT	**If Ticket Save mode is enabled, you will not be able to enable this menu. A warning message will be displayed instead.**

Sensors > Calibrate > Gap Windowing	
This feature compensates for any early falling edges or spurious peaks and troughs that may appear within the gap length in media. These edges or peaks and troughs can cause unreliable detection of the leading edge of the next label (top-of-form). Use Gap Windowing to resolve the following problems: Loss of one or more complete (serialized) labels. Start of an image printed in the middle of a gap, especially with fanfold, perforated media. Top part of an image lost when printing in head-first orientation.	
Disable	When the leading edge of a gap is detected, the printer continuously looks for the leading edge of the next label and uses it as the TOF position. Perforations or unusual media discrepancies within the gap can cause inaccurate TOF detection.
Enable	When the leading edge of a gap is detected, the printer ignores the first 90% of the gap length value specified in the Gap Length menu option. The result is that cross perforations or unusual media discrepancies within the gap are filtered out, allowing the printer to reliably detect the actual leading edge of the next label and use it as the TOF position.
Factory	Disable

Sensors > Calibrate > Gap Length	
Gap Length is the actual length (height) of a label gap measured in .01 inch increments.	
Minimum	0.05 inches
Maximum	1.00 inches
Factory	0.12 inches
WARNING	**You must enter the correct Gap Length. If the Gap Length is too long, the image will shift down from the leading edge (TOF) of the label.**

Sensors > Calibrate > Minimum Delta	
This menu changes the minimum threshold value the sensor(s) require to detect the difference between the label and a gap, notch, hole or black mark. This allows bolder gaps (such as notches or holes) to be used as the TOF while intermediate gaps (liner) can be ignored. Increasing the value makes the sensor(s) less sensitive to intermediate gaps and noise. Decreasing the value makes the sensor(s) more sensitive for detecting gaps on low contrast media, where there is very little difference between the label and the gap (liner).	
Minimum	048
Maximum	200
Factory	Gap/Mark Sensor = Disable, Gap, or Mark: 048 Otherwise: 080

Sensors > Calibrate > Use Label Length	
Determines whether or not *Media* > *Image* > *Label Length* is used during Auto Calibrate. This resolves problems where the sensor(s) may mistake high noise levels or preprinted images within the label as the gap, notch, hole, or black mark that could result in a sensed distance value much shorter than the actual label length. For example, a 0.2 inch calibrated Sensed Distance with a 3.0 inch long label installed.	
Disable	Auto Calibrate relies exclusively in its ability to detect varying transitions between labels and gaps, notches, holes, or black marks while advancing media during the calibrate process to determine Sensed Distance. The amount of media advanced is based on the number of transitions detected.
Enable	The Label Length is used in the calibrate algorithm. This causes the Auto Calibrate process to advance media the minimum distance required to detect the true gap, notch, hole, or black mark used for TOF (Top-of-Form) sensing.
Factory	Enable
IMPORTANT	**This menu will be ignored when *Media* > *Image* >*Set Label Length* is set to "Automatic". This is the Factory default.**
WARNING	**Setting the Label Length value less than half the actual length of the label in use will result in erroneous Sensed Distance values when Auto Calibrate is performed.**

Sensors > Calibrate > Threshold Range	
This option allows the user to select the optimal threshold range for the label stock. The printer defaults to using a threshold range of 50% of the positive going pulse (see *Sensors* > *Diagnostics* > *Media Profile*) that represents each gap, notch or mark detected after doing an Auto or Manual Calibrate. The printer then detects anything within the label with that threshold range as TOF. While this range is ideal for most medias, some labels with a preprinted image, liner gap or inlay can confuse the media sensor(s) causing a false TOF detection. In most cases this can be resolved by selecting a higher threshold range so the printer will only trigger on the true TOF (gap, notch or mark) position.	
Minimum	5%
Maximum	95%
Factory	50% (75% - RFID equipped printers)
IMPORTANT	**A new threshold range will not take effect until Calibration is successfully performed. A Sensors > Diagnostics > Media Profile should be run after a Calibrate to visually verify that the new range is the best possible selection**.

Sensors > Calibrate > Mark TOF Detect	
This menu controls how the TOF will be detected for Mark media.	
Mark Lead Edge	The leading edge of the mark will be used as the TOF and printing will be begin here.
Mark Trail Edge	The trailing edge of the mark will be used as the TOF and printing will be begin here.
Factory	Mark Lead Edge

Sensors > Calibrate > Label Window	
This menu controls whether or not media gap detection will be restricted to a certain plus/minus region to the current calibrated label length. For example, if the calibration resulted in a label length of 6 inches, then this menu enabled would restrict future gap detection to 6 inches plus or minus a range defined by the menu *Lbl Win Len*.	
Disable	Gap or Mark detection will not be restricted and is based on the when the sensor detects a gap or mark.
Enable	Gap or Mark detection will be restricted to a given area defined by ***Lbl Win Len*** menu.
Factory	Disable

Sensors > Calibrate > Lbl Win Len	
When the menu *Label Window* is enabled, this menu defines the plus or minus distance to seek gaps or marks. For example, if the calibrated label length is 6 inches, then a setting of 10% suggests to restrict gap or mark detection to plus or minus 0.6 inches near the expected 6 inch point of the label.	
Minimum	1 (percent)
Maximum	50 (percent)
Factory	5 (percent)

Sensors > Diagnostics

Sensors > Diagnostics > Media Profile	
This executable menu provides a graphical printout showing the relationship of the Paper Out Threshold and the Gap/Mark Threshold. The profile printout assists you in setting the thresholds for difficult media. This includes pre- printed labels, and labels with poor gap/media dynamic range.	
Start	When “Print Profile” is executed, the printer will advance media and print the media profile along the length of each label.
Completed	The printer will continue to print the profile until you press the ↵ ENTER key.

Sensors > Diagnostics > Manual Calibrate	
Manual Calibrate is another method of improving the printer's media sensing and is only used when Auto Calibrate has failed or the Gap/Mark Threshold or Paper Out Threshold values derived from Auto Calibrate do not improve the media sensors' gap or mark sensing capability.	
Start	To initiate Manual Calibrate, press ↵ ENTER key when "Manual Calibrate" displays. You will then be prompted for the remaining steps.
Completed	Manual Calibrate is completed successfully when the displayed Sensed Distance correctly matches that of the installed media. When Gap is selected, the Sensed Distance should match the length from the trailing edge of one gap to the trailing edge of the next gap (or one label + one gap). When Mark is selected, the Sensed Distance should match the length from the leading edge of one black mark to the leading edge of the next black mark.
Effects	This process takes longer than Auto Calibrate, and the end result is a change to the Gap/Mark Threshold, Paper Out Threshold, and Sensed Distance values that the printer will use. These value changes take effect immediately within the current configuration menu.
IMPORTANT	**Manual Calibrate supports label lengths up to 24 inches.**

System

System > Control

System > Control > Display Language	
This parameter chooses the language that will appear on the control panel: English, German, French, Italian, Spanish, Portuguese, Simp. Chinese, Trad. Chinese, Korean, and Russian.	
Factory Default	English

System > Control > LCD Brightness	
The brightness of the control panel backlight.	
Minimum	0
Maximum	31
Factory Default	16
IMPORTANT	**This value is saved independent of any one configuration and will be preserved across loading configurations.**

System > Control > Power-up State	
Determines if the printer will power-up in the ONLINE state or OFFLINE state (Home screen).	
Online	ONLINE state
Offline	OFFLINE state
Factory Default	ONLINE
IMPORTANT	**This OFFLINE selection must be saved as a power-up configuration to be used.**

System > Control > Alarm	
Determines how the audible alarm will be used when a fault occurs.	
On	An audible alarm sounds (3 beeps) when a fault occurs, such as a paper jam.
Cont. Beep	A continuous audible alarm sounds when a fault occurs, which can be stopped by pressing PAUSE.
Off	No audible alarm sounds.
Factory Default	On

System > Control > Media Units	
Determines if distances in the MEDIA section are displayed in inches or millimeters.	
In Inches	Inches are used.
In Millimeters	Millimeters are used.
Factory Default	In Inches

System > Control > Batch Counter	
Displays the number of pages remaining to be printed in a print job on the ONLINE screen message area. This feature is supported in PGL and ZGL only.	
Disable	Remaining pages is not displayed.
Enable	The number of remaining pages is displayed.
Factory Default	Disable
PGL Syntax	~EXECUTE;formname;[;FC][;ICNTn][;FCNTn]
ZGL Syntax	^PQ(#Pages)
WARNING	**If the correct execute command is absent from the print file, “0 Pages” will continually display on the control panel.**
IMPORTANT	**This menu is NOT available when System > Control > Program Select is set to PS/PDF.**

System > Control > Feed Key Online	
This option changes the functionality of the FEED key when the printer is ONLINE.	
Feed	When selected, pressing the FEED key causes the printer to feed a form.
Reprint Last	When selected, pressing the FEED key causes the printer to reprint the last printed form.
Factory Default	Feed

System > Control > Cancel Operation	
This option determines if the LEFT SOFT key in the Home screen will be used for “Cancel Data”. If so, then the LEFT SOFT key will be active when there is data in buffer.	
Disable	No option will be available to the user to Cancel Data from the front panel.
Enable	Allow the “Cancel Data” operation to be used. When executed, all data in the printer will be cancelled.
Factory Default	Enable

System > Control > Auto Locking	
This option can force the front panel ↵ ENTER key to return to the locked status five minutes after the last key press.	
Disable	The ↵ ENTER key is not automatically locked. It remains in its current state until locked manually or via power-up.
Enable	The ↵ ENTER key is automatically locked five minutes after the last key press.
Factory Default	Disable

System > Control > Set Lock Key	
Normally, to lock or unlock the printer menu, the up/down keys are pressed at the same time. The Set Lock Key executable menu lets you choose different keys to lock or unlock the printer menu. You may choose almost any group of keys as the new lock and unlock keys. You cannot use the ↵ ENTER key or any key combinations which are already used for other functions. One or more keys can used simultaneously.	
Start	The ↵ ENTER key is used to start the sequence and the user will be asked to select a new lock key.
Completed	After following all the instructions on the front panel (including entering the new lock key twice to confirm), the user will be informed the process was completed. If not successful, then the user will alerted.
IMPORTANT	**The new lock combination will remain even if the printer is powered off and back on.**

System > Control > Program Select	
Selects the active program and then reboots the printer. The active program requires the proper security is enabled or an error will occur. Call the Customer Support Center for more details.	
IPDS/PGL..MGL	This selection program has IPDS available (when security is present), and the emulations PGL through MGL under *Application* > *Control* > *Active IGP Emul* menu.
TN5250	This selection includes the TN5250 emulation and the emulations PGL through MGL under *Application* > *Control* > *Active IGP Emul* menu.
PS/PDF	This selection only includes the Postscript and PDF emulations. The *Active IGP Emul* menu is not present.
Factory Default	This depends on the security installed. If the security option for Postscript or TN5250 is enabled, then those programs will be chosen. Otherwise, IPDS/PGL..MGL.
IMPORTANT	**When selected, a confirmation message will appear with a warning of reboot. If the security installed does not support the choice, an error message will be displayed. No action will be taken if the program is currently active.**

System > Energy Star

System > Energy Star > Pwr Saver Time	
The time interval you specify for this parameter sets the amount of idle time before the printer goes into Power Saver mode. When you enter into Power Saver mode, the panel backlight is dimmed, the engine shuts down, and a panel message informs the user. Pressing any Control Panel key or certain network access to the printer removes the Power Saver message from the panel and the turns on the backlight (but the engine is still shut down). Sending a print job to the printer results in a full exit of Power Saver mode.	
Selections	The options are 1, 5, 10, 15, 30, 45, 60, and 120 minutes.
Factory Default	5 minutes.
IMPORTANT	**When ODV is installed and enabled, about 20 seconds is required to re-initialize ODV. During the Power Saver exiting procedure, a message will be displayed alerting user of the required delay.**

System > Energy Star > Pwr Saver Active	
This menu allows you to enable and disable Power Saver mode. If enabled, the menu for Power Saver Time is in effect.	
Disable	Power Saver mode is disabled and not used.
Enable	Power Saver mode is enabled.
Factory Default	Enable

System > Flash File View

This subsection will show all font and user downloaded files in FLASH memory. Files with one of the filename extensions *Filename Extensions Not Shown in Menus* page 257 are not shown in this section. The name of the file will be shown along with its size in bytes. This is a read-only section.

System > Flash File Edit

This subsection can be used to configure how FLASH file storage can be used and allow the users to delete files, copy files to the SD card, optimize memory, etc.

System > Flash File Edit > Overwrite Files	
This allows you to prevent files from being overwritten by disabling the overwrite function.	
Disable	Files cannot be overwritten either from copying a file from an SD card or by the host application.
Enable	Files can be overwritten as needed.
Factory Default	Enable
IMPORTANT	**When files are overwritten, the FLASH used for the original file is not truly deleted. Instead, that memory goes to the Flash Reclaimable area and cannot be used again until an Optimize & Reboot is performed.**

System > Flash File Edit > Delete Files	
This allows the user to delete user files in FLASH memory.	
File 1	File 1 is listed and will be deleted if selected.
…	
File N	File N represents the last user file in FLASH.
IMPORTANT	**When files are deleted, the file cannot be used, but the space cannot be used again until an Optimize & Reboot is performed.**

System > Flash File Edit > Available Space
Shows the user how much FLASH memory is available for new user files. This does not count memory in the Flash Reclaimable area. This is a read-only menu.

System > Flash File Edit > Flash Reclaimable
Shows the user how much FLASH memory is available to be reclaimed if the user performs the Optimize & Reboot function. This is a read-only menu.

System > Flash File Edit > Optimize & Reboot	
This is an executable menu that will reboot the printer and perform FLASH optimization which will remove any existing fragmentation (shown in Flash Reclaimable) back into the Available Space pool.	
IMPORTANT	**When executed, an "Optimizing Flash Files" message will be displayed when the printer is rebooting.**

System > Flash File Edit > Copy to SD	
This menu is only available when an SD card is found in the printer. This menu will transfer the selected file to the root directory of the installed SD card.	
File 1	File 1 will be copied to the SD card if selected.
…	
File N	File N will be copied to the SD card if selected.
IMPORTANT	**The SD card must be installed at the time of power-up and cannot be removed until the printer is powered off.**

System > Flash File Edit > Copy to USB	
This menu is only available when an USB drive is found in the printer. This menu will transfer the selected file to the root directory of the installed USB drive.	
File 1	File 1 will be copied to the USB drive if selected.
…	
File N	File N will be copied to the USB drive if selected.
IMPORTANT	**The USB drive must be installed at the time of this operation and cannot be removed until the copy is complete.**

System > Flash File Edit > Print File List
Prints a summary of the files stored in flash memory and several statistics on file system usage.

System > SD File View

This subsection will only be available if the SD card is installed at the time of power-up and not removed until the printer is powered off. It will show all files in the root directory of the SD card. The name of the file will be shown along with its size in bytes. This is a read-only section.

System > SD File Edit

This subsection can be used to configure how SD file storage can be used and allow the users to delete SD files, copy files from SD to FLASH, view available SD space, and manage the QCMC (Quick Change Memory Card) option when included.

IMPORTANT **The SD card must be installed at the time of power-up and cannot be removed until the printer is powered off.**

System > SD File Edit > Overwrite Files	
Like *System > Flash File Edit > Overwrite Files*, this prevents SD files from being overwritten by disabling the overwrite function.	
Disable	SD files can be overwritten either from copying a file from FLASH or by the host application.
Enable	SD files cannot be overwritten.
Factory Default	Enable

System > SD File Edit > Write Protect	
This prevents any writing to the SD card by the emulations as jobs are processed. This might be used to protect an SD card purchased with a Premium or Andale font, for example. If the SD has a physical switch to prevent writing, this takes precedence.	
Disable	SD files can be written as usual.
Enable	SD files will not be written.
Factory Default	Disable

System > SD File Edit > Delete Files	
This allows the user to delete user files from SD card root directory.	
File 1	File 1 is listed and will be deleted if selected.
…	
File N	File N is the last file on the SD card root directory.

System > SD File Edit > Print Files	
Allows the user to print a file directly by selecting it. That file will then be processed by the printer just as if it was sent by the host application.	
File 1	File 1 will be printed from the SD card if selected.
…	
File N	File N will be printed from the SD card if selected.

System > SD File Edit > Available Space
Shows the user how much SD card memory is available for new user files. This is a read-only menu.

System > SD File Edit > Copy from SD	
This menu will transfer the selected file from the SD card root directory to the printer FLASH memory.	
File 1	File 1 will be copied from the SD card if selected.
…	
File N	File N will be copied from the SD card if selected.

System > SD File Edit > Print File List
Prints a summary of the files stored in the SD card root directory and several statistics on SD file system usage.

System > SD File Edit > QCMC Update

This menu can be used to update the configuration within the QCMC image stored on the SD card (see *Appendix* Chapter 0 *Command Format*

Some concepts to keep in mind are as follows:

1. PTX_SETUP commands are not emulation specific. In a system with IGP emulations, the IGP level emulation will process the PTX_SETUP commands. In a system without an IGP, the PTX_SETUP commands will be processed by the base emulation (e.g., LP+).
2. Since there is no disk on a flash-based printer, DISK_IO commands are now called FILE_IO. However, for backwards compatibility DISK_IO and FILE_IO are synonymous.
3. The PTX_SETUP command set is case sensitive; all PTX_SETUP commands are in upper case characters only.
4. The white space separating commands may be any number of spaces and tabs. This allows a PTX_SETUP file to be formatted for easier readability.
5. The PTX_SETUP and PTX_END command should be followed by a new line character.
6. Any unknown command will terminate the PTX_SETUP processing. The offending command will be the first line of printed text.
7. Although the original implementation of PTX_SETUP allowed for only a single parameter, separated from the sub-command by a single semicolon (;) character, the new PTX_SETUP command set allows for multiple parameters separated by commas, semicolons, spaces or tabs.

Each emulation has modes in which the PTX_SETUP commands could get missed. For example, when a PGL label is being defined using the ~CREATE … END sequence, PTX-SETUP commands will not be processed during label format definition.

Therefore, it is highly recommended that all PTX_SETUP commands be placed between print jobs, rather than attempting to embed them within jobs.

PTX_SETUP commands have the following format:

(SFCC)PTX_SETUP

*Command***–***Action***;***Parameter*

PTX_END

For example, if the SFCC assigned to PTX_SETUP is the default value of the exclamation mark (!, hex 21), and you wanted to load configuration number 4, you would use the following command:

!PTX_SETUP

CONFIG–LOAD;4

PTX_END

This Appendix Section will be divided into different PTX_SETUP groups based on the *Command*. Each section will show different *Actions* and *Parameters* with a brief description of each. Some *Commands* may not be available for every product as they are often related to a particular option or capability. This will be noted in the Section.

NOTE: When a file system error occurs, a message will be displayed on the front panel indicating the error, and the action needed to take to correct the error.

CONFIG Commands

!PTX_SETUP

CONFIG–*Action*;*Parameter*

PTX_END

Table 27. PTX_SETUP CONFIG Commands

Action	Parameter	Description

System > SD File Edit > QCMC Erase

This menu can be used to erase the QCMC image stored on the SD card (see *Appendix* Chapter 0 *Command Format*

Some concepts to keep in mind are as follows:

8. PTX_SETUP commands are not emulation specific. In a system with IGP emulations, the IGP level emulation will process the PTX_SETUP commands. In a system without an IGP, the PTX_SETUP commands will be processed by the base emulation (e.g., LP+).
9. Since there is no disk on a flash-based printer, DISK_IO commands are now called FILE_IO. However, for backwards compatibility DISK_IO and FILE_IO are synonymous.
10. The PTX_SETUP command set is case sensitive; all PTX_SETUP commands are in upper case characters only.
11. The white space separating commands may be any number of spaces and tabs. This allows a PTX_SETUP file to be formatted for easier readability.
12. The PTX_SETUP and PTX_END command should be followed by a new line character.
13. Any unknown command will terminate the PTX_SETUP processing. The offending command will be the first line of printed text.
14. Although the original implementation of PTX_SETUP allowed for only a single parameter, separated from the sub-command by a single semicolon (;) character, the new PTX_SETUP command set allows for multiple parameters separated by commas, semicolons, spaces or tabs.

Each emulation has modes in which the PTX_SETUP commands could get missed. For example, when a PGL label is being defined using the ~CREATE … END sequence, PTX-SETUP commands will not be processed during label format definition.

Therefore, it is highly recommended that all PTX_SETUP commands be placed between print jobs, rather than attempting to embed them within jobs.

PTX_SETUP commands have the following format:

(SFCC)PTX_SETUP

*Command***–***Action***;***Parameter*

PTX_END

For example, if the SFCC assigned to PTX_SETUP is the default value of the exclamation mark (!, hex 21), and you wanted to load configuration number 4, you would use the following command:

!PTX_SETUP

CONFIG–LOAD;4

PTX_END

This Appendix Section will be divided into different PTX_SETUP groups based on the *Command*. Each section will show different *Actions* and *Parameters* with a brief description of each. Some *Commands* may not be available for every product as they are often related to a particular option or capability. This will be noted in the Section.

NOTE: When a file system error occurs, a message will be displayed on the front panel indicating the error, and the action needed to take to correct the error.

CONFIG Commands

!PTX_SETUP

CONFIG–*Action*;*Parameter*

PTX_END

Table 27. PTX_SETUP CONFIG Commands

Action	Parameter	Description
CLEAR_NAMES		This command resets all of the configuration names to their default values.
DELETE	*Cfg*	Deletes Configuration number *Cfg* 1-8.
DOWNLOAD	*Cfg*	This command saves the configuration data that follows as configuration *Cfg. Cfg* must be 1-8 or END.
GET_NAMES	*Port* or *FILE;NAME*	This command uploads the names of the configurations to the port specified by Port. Port must either be “1284”, “SERIAL”, “USB”, or “ETHERNET”. Alternatively, “FILE” followed by a filename NAME can be used to store the info into a file.
INFO	*Port*	This command uploads general information about the printer to the port specified by Port. Port must either be “1284”, “SERIAL”, “USB”, or “ETHERNET”. The format of the return information is discussed later in this section.
LOAD	*Cfg*	*Cfg* can be 0-8 (0=Factory). This loads configuration *Cfg*. If configuration *Cfg* was not previously saved, the operator panel will display an error message and the current configuration will not be changed.
MPI_SELECT	*MPI*	This command selects the active Management Protocol Interface (MPI). Currently there are two selections “UCP” and “PXML”. The default is PXML.
NETCFG	*0 or 1*	Loads the NIC configuration: 0 = OEM Configuration, 1 = MFG Configuration
OVERLAY	*Cfg*	This command overlays the configuration data that follows on existing configuration *Cfg*. *Cfg* must be 1-8 (or END). If *Cfg* does not exist then command is treated the same as DOWNLOAD.

PANEL	*LOCK* or *UNLOCK*	Parameter “LOCK” locks the operator configuration menu. Parameter “UNLOCK” unlocks the menu and allows the operator access to the menus. By default, the menu is unlocked.
PNE_PORT	*Port*	This command selects the port that the PNE will use to communicate to the printer. The valid ports are “DISABLE”, “ETHERNET”, or “USB”. **NOTE:** If ETHERNET is selected but not enabled, the selection will revert to DISABLE.
PNE_PORT_NUM	*Port Number*	This command sets the Ethernet Port the PNE uses to communicate if the PNE Port was set to Ethernet. **NOTE:** This causes the printer to automatically reboot.
POWERUP	*Cfg*	Sets the power-up configuration to *Cfg* and loads Configuration *Cfg*. *Cfg* can be any value from 0-8, where 0=Factory.
PRINT	*Cfg*	Print Configuration *Cfg*. *Cfg* can be a number 1-8, or one of four pre-defined configurations. The four non-numeric configurations are requested using the first character for the CURRENT, FACTORY, POWERUP, or ALL configuration(s).
PXML_PORT_NUM	*Port Number*	This command sets the Ethernet Port the PXML and UCP will use to communicate if the PXML Port is set to Ethernet. **NOTE:** This causes the printer to automatically reboot.
RESET		Reboots the printer.
SAVE	*Cfg*	*Cfg* must be 1-8. This command will save the current configuration as configuration *Cfg*. If *Cfg* is not in the range of 1-8, the command is ignored.
SETMENU	*Value;Tag*	*Tag* is the name of the menu as defined in the menu file. *Value* is the value to which the menu is to be set. This function should be used with great caution as setting an invalid *Value* could make the printer non-functional.
GETMENU	*Port* *Tag1* ... *TagN*	This command uploads a set of menu values to the location *Port*. Port must either be “1284”, “SERIAL”, “USB”, or “ETHERNET”. Following a line terminator (e.g., CR+LF), a series of Tags can be listed (each separated by a line terminator) with *CONFIG-GETMENU;END* marking the end. See the example later in this Section.
SET_NAME	*Cfg*	This command downloads a name for the configuration specified by *Cfg*. *Cfg* must be 1-8.

UPLOAD	*Port;Cfg* or *FILE;Name;Cfg*	This command uploads the configuration stored in location *Cfg* to the port specified by Port. Port must either be “1284”, “SERIAL”, “USB”, or “ETHERNET”. *Cfg* may be 1-8 or ALL. Alternatively, “FILE” followed by a filename NAME can be used to store the configuration into a file.

Configuration Upload / Download

The UPLOAD and DOWNLOAD command can be used for uploading and downloading complete printer configurations. If a customer needs to configure 50 printers identically, the customer needs only configure one printer and UPLOAD the configurations. The configurations uploaded may then be sent to other printers as jobs eliminating the necessity for the operator to configure each printer manually.

The UPLOAD command will always place a header and footer into the uploaded data. This header will be the DOWNLOAD command followed by the configuration number. The footer will be the DOWNLOAD END command. The operator should be aware that the UPLOAD and DOWNLOAD commands use a secondary copy of the menu structure which does not affect the printer's active configuration. This allows the UPLOAD and DOWNLOAD commands to operate without affecting the printer's current configuration.

If the operator intends to use one of the configurations after downloading, the operator should reboot the printer to ensure proper operation. This can be accomplished by adding the RESET command as the last command in your setup file. This is necessary because the printer caches the active configuration. Rebooting the printer ensures that the desired configuration is correctly read from FLASH.

NOTE: While an upload or download is in progress, the Front Panel will be unavailable.

INFO Return Status

The INFO command returns a collective set of the information about the printer state in the following format:

```
!PTX_SETUP
CONFIG-INFO
MODEL;<Model Name>
PROGRAM VERSION;<Program File Version>
PROGRAM FILE; <Program File Number>
SERIAL NUMBER;<Serial Number of Printer>
DPI;<203, 300, or 600>
RFID;<1=Present, 0=Not Installed>
ODV;<1=Present, 0=Not Installed>
GPIO;<1=Present, 0=Not Installed>
PTX_END
```

GETMENU Command and Return Data

The GETMENU command is formed to allow the user to name a set of menus to be returned back to the host system per the following format example, sending the results back through the host network:

```
!PTX_SETUP
CONFIG-GETMENU;ETHERNET
igpswitch
```

```
serbaud
CONFIG-GETMENU;END
PTX_END
```

The results coming back through the network host would look something like this:

```
!PTX_SETUP
CONFIG-GETMENU
igpswitch;2
serbaud;3
CONFIG-GETMENU;END
PTX_END
```

FILE_IO Commands

!PTX_SETUP

FILE_IO–*Action*;*Parameter*

PTX_END

Table 28. PTX_SETUP FILE_IO Commands

Action	Parameter	Description
CAPTURE	*Filename*	When *Filename* is provided, this begins capturing all incoming data into given *Filename*. This file will be targeted for the DRIVE (see below) supplied. When all data to be captured has been received, this same command should be sent without the *Filename* parameter to terminate the capture process and commit the data to a specified drive.
CERTTYPE	*Filename;Type*	When a Network Certificate file is downloaded using the FILE_IO CAPTURE. The certificate type will be set. The types available are: **MQTT** MC - CA Certificate PC - Printer Certificate PK - Private Key FS - File Store **802.1x** SP - Printer Certificate SK - Private Key SC - CA Certificate
DEL	*Filename*	The DEL action will mark *Filename* as deleted.
DRIVE	*Letter*	The drive letter chooses between the Flash File System, SD Card, or USB drive (if available). No drive letter or the drive letter A selects the Flash File System. The drive letter B selects the SD card, letter D selects the USB drive if available.

DUMPFILE	*File;Prop; Size*	When *File* is provided, space is reserved based on the *Size* parameter. The parameter PROPS is the four-byte value that specifies the file properties. When all data to be captured has been received, this same command should be sent without the parameters to terminate the capture process and commit the data to the original *File*.
OPTIMIZE		Causes the printer to optimize the Flash File System. The printer automatically reboots during this process.
PROPS	*File;Prop*	The PROPS action will set the file properties of a given file. The file properties are a four letter, case sensitive file descriptor. The properties field can be used to ensure that a file is used for its intended purpose. Once properties have been associated with a file, they cannot be changed.
RUNFILE	*File;Prop*	The RUNFILE action will open the file named *File* for printing. After the PTX_END command is processed, the contents of *File* will get printed before any more data is read from the host. If the *Prop* field is present, RUNFILE will verify that *Prop* matches the saved file properties. Any mismatch will cause the command to be ignored.
UPLOAD	*File;Port*	Reads the file named *File* out of the flash file system and sends it to a host computer via the Port I/O port. Port is either "1284", "SERIAL", "USB", or "ETHERNET".

When a file is opened for writing with the FILE_IO–CAPTURE;*Filename* command, the system will allocate RAM for file control blocks as needed. If the file already exists on the Flash File System and the *System > Flash File Edit > Overwrite Files* menu is set to disable, a warning will be displayed on the front panel. After clearing the warning, the file data will be printed. To overwrite the existing file, set the Overwrite Files option to enable.

Due to the nature of writing files, the data is first stored into RAM. As a result, the printer must have sufficient available RAM. If the printer is not able to allocate enough RAM, a warning will be displayed on the front panel.

None of the captured file data will be committed to flash until the entire file is loaded and the terminating command "FILE_IO–CAPTURE" is received. Receipt of the command will cause all file data to be written to the drive targeted with the "FILE_IO-DRIVE" command. Any errors with this process will result in a front panel warning message.

Example to store file "Test.bmp" to Flash:

```
!PTX_SETUP
FILE_IO-DRIVE;A
FILE_IO-CAPTURE;Test.bmp
PTX_END
<data>
<data>
<data>
!PTX_SETUP
FILE_IO-CAPTURE
```

PTX_END

NOTE: Lack of available flash memory might be due to files that have been deleted but the flash space has not been reclaimed. Such flash can be reclaimed by using the *System > Flash File Edit > Optimize & Reboot* function.

NOTE: After selecting the Optimize & Reboot function, do not shut off the printer's power until after the printer returns to the power-on state. Loss of power during the optimize process may corrupt the printer's program. If this occurs, first attempt to repeat the downloading process. If that fails, contact an authorized service representative.

ENGINE Commands

!PTX_SETUP

ENGINE–*Action*;*Parameter*

PTX_END

Table 29. PTX_SETUP ENGINE Commands

Action	Parameter	Description
ALM_WIDE	*wide width*	Set the Auto Label Mapping *wide width* (units of 1/1000"; e.g., a *wide width* value of 1000 = 1"), which represents the width of the image in the file sent from the host which is to be auto label mapped into several labels, each of which will have a width of *narrow width*. #labels = *wide width/narrow width* (rounded down)
ALM_NARROW	*narrow width*	Set the Auto Label Mapping *narrow width*, which represents the width of one auto mapped label (in units of 1/1000"; e.g., a *narrow width* value of 1000 = 1"). This width should be set prior to the *wide width*. In addition, it can never exceed the physical width of the printer. If it does, the *narrow width* will be automatically reduced to the *Media > Image > Label Width* value set in the configuration menu.
ALM_ENABLE	*N* *W* *	Set Auto Label Mapping to Narrow, Wide, or Off. Enter "N" for Narrow, "W" for Wide, or any other letter to disable ALM. By default, only the Narrow option is implemented.
EJECT		Performs a Form Feed.
IMAGE_SHFT_H	*Value*	Shifts the image *Value* horizontally in 1/1000" units. If *Value* is out of range with the panel menu *Media > Image > Horizontal Shift* , the command will be ignored.
IMAGE_SHFT_V	*Value*	Shifts the image *Value* vertically in 1/1000" units. If *Value* is out of range with the panel menu *Media > Image > Vertical Shift* , the command will be ignored.

LENGTH	*Value*	Sets the *Media* > *Image* > *Label Length* using 1/1000” units.
MEDIA_HANDLING	*Value*	Sets the type of media handling: 0 - Continuous 1 - Tear-Off Strip 2 - Tear-Off (Not Available on T800/T4000) 5 - Peel-Off 6 - Cut
MIRROR	*Value*	Value of 0 turns mirroring off, non-zero turns mirroring on.
MODE	*X* *D*	Parameter “X” sets the print mode to Thermal Transfer, parameter “D” sets to Direct Thermal.
ODV	*1*	Enables the ODV unit so that ODV begins verifying printed barcodes.
OVERSTRIKE	*0*	Requests the printer to back up one form (as defined by the *Form Length*) and then print out an overstrike pattern. This command should only be used if the *Validator* > *Control* > *Validator Action* is set to *Retry Form.*
WIDTH	*Value*	Sets the *Media* > *Image* > *Label Width* using 1/1000” units.

RFID Commands

!PTX_SETUP

RFID–*Action*;*Parameter*

PTX_END

NOTE on Action EPC_LENGTH:

Extreme caution should be used when utilizing this command. In normal circumstances, calibrating tags requires only using the “Run Calibration” menu. When tags are calibrated, the maximum sizes of the various RFID banks (including the EPC bank) are automatically set based on the silicon type detected. The values determined by the calibration should not be changed. Emulation commands can read or write any EPC length that is less than or equal to the maximum EPC length without changing this value.

There is only one circumstance where a user might want to set this value: if during calibration a warning message is displayed on the control panel that the silicon type was not recognized, the maximum EPC length can be manually set with this command if known. If the silicon type in the tags being used does not support a length as long as the maximum length set by this command, all subsequent read and write tag operations will fail.

Table 30. PTX_SETUP RFID Commands

Action	Parameter	Description
EPC_LENGTH	*Bit Length*	Sets the maximum length of the EPC bank in bits.

OVERSTRIKE_REPORT	*ON* or *OFF*	Enables/disables reporting of RFID overstrikes to the host. The default is OFF (disabled).
STATISTICS_REPORT	*ON* or *OFF*	Enables/disables reporting of RFID statistics to the host. The default is OFF (disabled).
STATISTICS_CLEAR		Clears the RFID statistics.
GET_STATISTICS		Returns the RFID statistics values as shown below
RFID_CAL		Executes the RFID calibration procedure. This will take a few minutes. After the calibration completes, information is returned in the same format as with RFID_LASTCAL.
RFID_LASTCAL		Return information about the last RFID calibration in the form shown in the section below.
GET_CALINFO		Return expanded information about the last RFID calibration in the form shown in the section below. This command returns all of the same information as returned by RFID_LASTCAL in addition to some extra pieces of information about the calibration results, including the currently chosen operation order.
SET_OPORDER	*RFID_DURING_PRINT, RFID_BEFORE_PRINT, or RFID_AFTER_PRINT*	Sets the Operation Order in the RFID Calibration Params menu to Encode Before Print, Encode During Print, or Encode After Print. No all operation orders are legal for all tag types. If an operation order is not legal for the currently calibrated tag type, the setting will be ignored. Success in changing the setting can be confirmed with the GET_CALINFO command.
SET_LABELRETRY	*Number of Retries*	Sets the number of retries in the “Label Retry” menu. This number represents the number of successive tags that will be overstruck due to failed RFID operations before a fault is declared on the control panel
SET_ERRHANDLE	*RFID_ERR_NONE, RFID_ERR_STOP, or RFID_OVERSTRIKE*	Changes the value of the “Error Handling” RFID menu to None, Stop, or Overstrike mode.

GET_RFIDCONTROL		Returns information about items in the RFID control menu including the number of retries and the RFID error handling mode. It returns information in the form shown in the section below.

The GET_STATISTICS information that is returned to the host is with this format:

```
!PTX_SETUP
RFID-GET_STATISTICS
TID;<TID>
RFID TAGS PASSED;<Number of Tags with all RFID Passed>
WRITE TAGS FAIL;<Number of Tags Failed Due To Write Operation>
READ TAGS FAIL;<Number of Tags Failed Due To Read Operation>
LOCK TAGS FAIL;< Number of Tags Failed Due To Lock Operation>
PTX_END
```

The RFID_LASTCAL information that is returned to the host is with this format:

```
!PTX_SETUP
RFID_LASTCAL-INFO
TID;<TID>
FORM LENGTH;<xx.yy inches>
POSITION;<xx.yy inches>
WRITE POWER;<Power Setting>
READ POWER;<Power Setting>
PTX_END
```

The GET_CALINFO information that is returned to the host is with this format:

```
!PTX_SETUP
RFID-GET_CALINFO
TID;<TID>
POSITION;<xx.yy inches>
BASE POS;<xx.yy inches>
READ POWER;<Power Setting>
WRITE POWER;<Power Setting>
ANTENNA;<0 for external antenna and 1 for internal antenna>
TID;<TID that identifies silicon in calibrated tags>
USR SIZE;<Size of USR Bank on calibrated tags>
EPC SIZE;<Size of EPC Bank on calibrated tags>
OPERATION ORDER;<Operation Order>
PTX_END
```

The GET_STATISTICS information that is returned to the host is with this format:

```
!PTX_SETUP
RFID-GET_RFIDCONTROL
```

```
ERROR HANDLING;<RFID Error Handling Mode>
LABEL RETRY;<Number of Label Retries>
PTX_END
```

ODV-2D Commands

!PTX_SETUP

ODV–*Action*;*Parameter*

PTX_END

Table 31 PTX_SETUP Commands for ODV-2D

Action	Parameter	Description
GRAPHICS	*ON or 1* *OFF or 0*	When enabled, search graphics within the job for barcodes. Otherwise, ignore the graphics and only process the barcode command from the emulations.
ORIENT	*ALL* *PICKET* *LADDER*	Choose the orientations of the barcodes to process.
SKIP	*0 = OFF* *1-9999 = #* *> 9999 = ON*	Skip a certain number of labels from ODV2D processing. If zero, no labels will be skipped (ignored). If 1-9999, this number of labels will be skipped. Numbers > 9999 will result in indefinite skipping of labels.
CODE39	*ON or 1* *OFF or 0*	When enabled, Code 39 barcodes will be processed. Otherwise, they will be ignored on the label.
CODE128	*ON or 1* *OFF or 0*	When enabled, Code 128 barcodes will be processed. Otherwise, they will be ignored on the label.
INT2/5	*ON or 1* *OFF or 0*	When enabled, Interleaved 2/5 barcodes will be processed. Otherwise, they will be ignored on the label.
CODE93	*ON or 1* *OFF or 0*	When enabled, Code 93 barcodes will be processed. Otherwise, they will be ignored on the label.
CODABAR	*ON or 1* *OFF or 0*	When enabled, Codabar barcodes will be processed. Otherwise, they will be ignored on the label.
UPC/EAN	*ON or 1* *OFF or 0*	When enabled, UPC and EAN barcodes will be processed. Otherwise, they will be ignored on the label.
PDF417	*ON or 1* *OFF or 0*	When enabled, PDF417 barcodes will be processed. Otherwise, they will be ignored on the label.
MICRO417 (FUTURE)	*ON or 1* *OFF or 0*	When enabled, Micro PDF417 barcodes will be processed. Otherwise, they will be ignored on the label.

DATAMATRIX	*ON or 1* *OFF or 0*	When enabled, Data Matrix barcodes will be processed. Otherwise, they will be ignored on the label.
QR	*ON or 1* *OFF or 0*	When enabled, QR barcodes will be processed. Otherwise, they will be ignored on the label.
AZTEC (FUTURE)	*ON or 1* *OFF or 0*	When enabled, Aztec barcodes will be processed. Otherwise, they will be ignored on the label.
ZONE	*SYMB;* *X1;Y1* *X2;Y2* *ROT;MIN* *ROW;COL*	Allows a barcode that is pre-printed on the label to be included for the ODV-2D to validate. The parameters are as follows: *SYMB* = Symbology (same strings as used in the Action list above) *X1;Y1* = Upper left-hand corner in 1/1000 inches. *X2;Y2* = Lower right-hand corner in 1/1000 inches. *ROT* = "NOR", "CCW", "CW", or "INV" *MIN* = Minimum bar size in 1/1000" inches *ROW* = Data Matrix rows *COL* = Data Matrix columns

Misc Commands

LP MODE Commands

!PTX_SETUP

LPMODE;*Parameter*

PTX_END

Action	Parameter	Description
n/a	Protocol	*Protocol* must be 0-4. This command resets the software protocol, and is selected as follows: 0 - P-Series 1 - P-Series XQ 2 - Serial Matrix 3 - Proprinter III XL 4 - Epson FX-1050

NIC_SETUP Commands

!PTX_SETUP

NIC_SETUP

<NIC setup command>

<NIC setup command>

<NIC setup command>

END_NIC_SETUP

PTX_END

NIC setup is for advanced users only and requires using commands as described in the Ethernet User's Manual. Here is an example below:

```
!PTX_SETUP
NIC_SETUP
store net tcp opts -zeroiparp
store ifc from default
store ifc 2 wlan ssid ap1231_vl1_open
store pping opts enable
store pping packet 2
store pping period 2
END_NIC_SETUP
PTX_END
```

GPIO Commands

!PTX_SETUP

GPIO–*Action*;*Parameter*

PTX_END

Action	Parameter	Description
EVENT	*Value*	Triggers a GPIO event by the *Value* given. Valid event numbers range from 0-65535.

PRINTJOB Commands

!PTX_SETUP

PRINTJOB–*Action*;*Parameter*

PTX_END

Action	Parameter	Description
START	*jobID*	Start of job marker. Results in a "start of job" message sent back to host through the PPM port when a job starts printing.
END	*jobID*	End of job marker. Results in a "end of job" message sent back to host through the PPM port when the job finishes printing.

Quick Change Memory Card (QCMC) page 323).

System > USB File View

This subsection will only be available if the USB card is installed at the time of power-up and not removed until the printer is powered off. It will show all files in the root directory of the USB drive that are less than 2GB in size. The name of the file will be shown along with its size in bytes. This is a read-only section.

When reading the USB drive and listing available files, the following are considered valid file names:

- Digits, uppercase, and lowercase characters
- Dot '.'
- Underscore '_'
- Dash '-'
- Ampersand '&'
- Tilde '~'

File names that do not conform will not be shown.

Files that are greater than 2 GB are ignored as well to prevent overwhelming the system.

System > USB File Edit

This subsection can be used to configure how USB file storage can be used and allow the users to delete USB files, copy files from USB to FLASH, view available USB space, and print a file directly from the USB.

IMPORTANT **The USB drive can be inserted and removed during run-time. A message on the front panel will be displayed acknowledging the USB was inserted or removed.**

IMPORTANT **Memory transfers are limited by the amount of free RAM in the system. We recommend limiting the file transfer size to 20 MB.**

System > USB File Edit > Overwrite Files	
Like *System* > *Flash File Edit* > *Overwrite Files*, this prevents USB files from being overwritten by disabling the overwrite function.	
Disable	USB files can be overwritten either from copying a file from FLASH or by the host application.
Enable	USB files cannot be overwritten.
Factory Default	Enable

System > USB File Edit > Delete Files	
This allows the user to delete user files from USB card root directory.	
File 1	File 1 is listed and will be deleted if selected.
…	
File N	File N is the last file on the USB card root directory.

System > USB File Edit > Print Files	
Allows the user to print a file directly by selecting it. That file will then be processed by the printer just as if it was sent by the host application.	
File 1	File 1 will be printed from the USB drive if selected.
…	
File N	File N will be printed from the USB drive if selected.

System > USB File Edit > Copy from USB	
This menu will transfer the selected file from the USB card root directory to the printer FLASH memory.	
File 1	File 1 will be copied from the USB card if selected.
…	
File N	File N will be copied from the USB card if selected.

System > USB File Edit > Print File List
Prints a summary of the files stored in the USB card root directory and several statistics on USB file system usage.

System > Printer Mgmt

System > Printer Mgmt > Rcv. Status Port	
This option defines the interface being used to receive the emulation status command.	
Automatic	When selected, the status command is sent to the printer with the print data through the active host interface.
Serial	When selected, the status command is sent to the printer through the serial interface regardless of the active host interface.
Factory Default	Automatic

System > Printer Mgmt > Ret. Status Port	
This option selects the port for return Status Commands used by the emulations. For PGL, this is the ~STATUS command, and for ZGL, this is the ^HS command.	
Automatic	Sends the data through the same port as used to receive the application job.
Disable	Status is not sent back to the host.
E-NET Data Port	Ethernet data port.
Serial	Serial RS-232 port
E-NET Stat Port	Ethernet port as set in Status Port Number menu
USB	USB
IEEE-1284	IEEE-1284 parallel interface
Factory Default	Automatic

System > Printer Mgmt > Status Port Number	
This menu selects the port number the printer sends the emulation status.	
Minimum	1025
Maximum	65535
Factory Default	3002

System > Printer Mgmt > PNE Port Choice	
This menu selects which port the printer expects PNE (PrintNet Enterprise) to connect to, via Ethernet or USB. The factory default is Ethernet.	
Disable	PNE communication will be disabled.
Ethernet	Use Ethernet to connect with PNE.
USB	Use USB to connect with PNE.
Factory Default	Ethernet

System > Printer Mgmt > PNE Port Number	
This menu selects the port number the printer expects PNE to connect through.	
Minimum	1025
Maximum	65535
Factory Default	3001

System > Printer Mgmt > PNE Port Timeout	
If PNE has not communicated to the printer within a timeout period, the PNE session closes.	
Minimum	1 second
Maximum	255 seconds
Factory Default	100 seconds

System > Printer Mgmt > Mgmt Port Number	
This menu selects the port number the printer expects the PXML or UCP to connect through.	
Minimum	1023
Maximum	65535
Factory Default	3007

System > Printer Mgmt > Mgmt Protocol	
Since PXML and UCP management protocols share the same Ethernet port, only one can be active at a time. This menu selects the active Management Protocol Interface, either PXML or UCP.	
PXML	Printronix XML management protocol used to control and manage the printer. See the XML Programmer Reference Guide for more information.
UCP	The Universal Control Port that can be used for GPIO or CST applications.
Factory Default	PXML

System > Date

This subsection can be used to configure the Date and Time in the printer. If the Real Time Clock (RTC) is installed the values will be saved in the RTC otherwise the values will be reset when the printer is powered off. The Printer Time and Date can also be set by setting the NTP servers in the PrintNet Enterprise through the Printer Webpage. Since the NTP servers return the Date and Time as Coordinated Universal Time (UTC), the Time Zone Offset must be set to display the local time. If the NTP servers information is set, the UTC will override the RTC in the printer.

System > Date > Hour	
This option allows you to set the hour.	
Minimum	00
Maximum	23
Factory Default	0

System > Date > Minute	
This option allows you to set the minutes.	
Minimum	00
Maximum	59
Factory Default	0

System > Date > Year	
This option allows you to set the year.	
Minimum	2018
Maximum	2037
Factory Default	2037

System > Date > Month	
This option allows you to set the month.	
Minimum	January
Maximum	December
Factory Default	January

System > Date > Day	
This option allows you to set the day.	
Minimum	01
Maximum	31
Factory Default	01

System > Date > Time Zone Offset	
This option allows you to add a time zone offset to the value to localize the UTC time.	
Minimum	UTC-12:00
Maximum	UTC+14:00
Factory Default	UTC+00:00

System > GPIO

GPIO (General Purpose I/O) is both hardware and software. The hardware is the actual IO board mounted in the printer, and the software is the GPIO Manager which is part of PNE (PrintNet Enterprise). The GPIO hardware is a printed circuit board containing optically isolated inputs and outputs as well as relays. The GPIO software is both a printer resident GPIO event parser that executes GPIO Tables created by the GPIO Manager. The GPIO table is used to control how the GPIO hardware behaves for a given application.

Refer to the *GPIO User's Guide* for more information and a description of the menus in this section.

IMPORTANT **This subsection will only be visible when the GPIO option installed.**

Application

LP+, PGL, VGL Character Sets

The Character Sets for LP+, PGL, and VGL are chosen by **Character Group** and also a **Character Set** within that group. The active Character Group will determine which collection of Character Sets will be shown on the panel and available for selection. The LP+, PGL, and VGL each have their own Character Group and Character Set selections. In the case of the LP+, every protocol (P-Series, Serial Matrix, etc.) except for P-Series XQ will have its own selections as well.

The Character Group options and Character Set choices are described in this section. The default Character Group “Standard Sets” is the legacy character set group and is unique to each emulation or protocol. Therefore, it will be shown only in its respective section. The other groups are common and will be described here. Any minor variations among the emulations will be highlighted here.

Character Group is selected within each emulation or protocol by their respective menu *Application* > *XXX Setup* > *Character Group*, where XXX represents the emulation or protocol.

Application > XXX Setup > Character Group	
This option selects the Character Set Group. Based on the group selected, then the character set can be chosen with the menu following *XXX Sets*.	
Standard Sets	A set of legacy sets via Standard Sets menu.
Arabic Sets	A set of Arabic sets via Arabic Sets menu.
Cyrillic Sets	A set of Cyrillic sets via Cyrillic Sets menu.
European Sets	A set of European sets via European Sets menu.
Greek Sets	A set of Greek sets via Greek Sets menu.
Hebrew Sets	A set of Hebrew sets via Hebrew Sets menu.
Turkish Sets	A set of Turkish sets via Turkish Sets menu.
UTF-8	Selects the UTF-8 character set.
Factory Default	Standard Sets
IMPORTANT	VGL does not have the UTF-8 character group.

Application > XXX Setup > Standard Sets		
This is the legacy Character Group and is described in each XXX Setup section.		
Standard Sets	Unique	Unique
Factory Default	Unique	

Application > XXX Setup > Arabic Sets		
This option will show when menu Character Group is set to Arabic Sets.		
Arabic Sets	ASMO 449 ASMO 449+ ASMO 708 ASMO 708+ MSDOS CP710 MSDOS CP720 Sakr CP714 Aptec CP715 CP 786	IBM CP864 IBM CP1046 Arabic Lam One Arabic Lam Two Win. CP1256 Farsi 1 Farsi 2 1098 Farsi 1285
Factory Default	ASMO 449	

Application > XXX Setup > Cyrillic Sets		
This option will show when menu Character Group is set to Cyrillic Sets.		
Cyrillic Sets	Code Page 866 Cyrillic CP 437 Cyrillic 113 Cyrillic 8859-5 ISO 915 Code Page 855	Cyrillic 7 bit Ukrainian Bulgarian Win. CP 1251 Latvian 866 CP 1048
Factory Default	Code Page 866	
IMPORTANT	CP 1048 is not available for VGL, P-Series, Serial Matrix, or Proprinter XL.	

Application > XXX Setup > European Sets		
This option will show when menu Character Group is set to European Sets.		
European Sets	Latin 2 8859-2 Code Page 852 Mazovia Kamenicky Roman 8 PC-437 Slavic Slavic 1250 Code Page 865 Code Page 860 Latin 1 8859-1 Latin 5 8859-9 Latin 9 8859-15	Polish POL1 Win. CP 1250 Win. CP 1252 Win. CP 1257 CP 858 EURO Lith. CP 773 Serbo Croatic 1 Serbo Croatic 2 CP 774 CP 775 ISO 8859-4
Factory Default	Latin 2 8859-2	

Application > XXX Setup > Greek Sets		
This option will show when menu Character Group is set to Cyrillic Sets.		
Greek Sets	DEC 256 Greek ELOT 928 Greek Greek 3 ABY Greek ABG Greek ELOT 927 Greek	Greek 851 Greek 437 Greek 8859-7 Win. CP 1253 Greek 813 EURO Greek 869 EURO
Factory Default	DEC 256 Greek	

Application > XXX Setup > Hebrew Sets		
This option will show when menu Character Group is set to Hebrew Sets.		
Hebrew Sets	Hebrew Old Hebrew New Hebrew DEC	Latin-1 Hebrew Win. CP 1255
Factory Default	Hebrew Old	

Application > XXX Setup > Turkish Sets		
This option will show when menu Character Group is set to Turkish Sets.		
Turkish Sets	Data Gen. Turk.* DEC Turkish IBM Turkish Siemens Turkish PTT Turkish IBC Turkish Bull Turkish AS400 Turkish Unisys Turkish	NCR Turkish PST Turkish UNIS-1 Turkish Code Page 853 INFO Turkish Win. CP 1254 Code Page 857 Azeri
Factory Default	Data Gen. Turk.*	
IMPORTANT	Azeri is not available for P-Series, Serial Matrix, or Epson-FX.	

Application > XXX Setup > UTF-8	
This option will show when menu Character Group is set to UTF-8.	
UTF-8 Sets	UTF-8
Factory Default	UTF-8
IMPORTANT	VGL does not support UTF-8.

Application > Control

Application > Control > Active IGP Emul	
This function allows you to activate any IGP emulation listed in the menu. The IGP emulation can be changed with this menu or by host command if the current Active IGP emulation supports it.	
PGL	Printronix Graphics Language.
VGL	Emulates the QMS Code-V protocol.
ZGL *	Emulates the Zebra ZPL protocol.
TGL *	Emulates the Toshiba TEC protocol.
IGL *	Emulates the Intermec IPL protocol.
STGL *	Emulates the Sato SPL protocol.
DGL *	Emulates the Datamax DPL protocol.
IEGL *	Emulates the IER IER-520 protocol.
MGL *	Emulates the Monarch MPCL II protocol.
EGL *	Emulates the Eltron protocol.
CGL *	Available upon special request only.
Factory Default	PGL
IMPORTANT	**This menu and the Emulations shown above are NOT available when System > Control > Program Select is set to PS/PDF.**

NOTE: For those emulations marked with an asterisk (*), the menus are described in detail in their respective Refer to the *Programmer's Reference Manual* and not outlined in this manual.

Application > Control > PGL Diagnostics	
This menu sets the error reporting capability of PGL when selected as the current Active IGP emulation.	
On	Full error checking reported. Any element that falls off the current page is reported as an error.
Debug Mode	Puts the printer in debug mode whenever a form is defined in CREATE mode. Each line of the CREATE form will be printed along with an error if one has occurred.
Fault	Allows you to halt the printer if a PGL error occurs. If you select this option, the PGL error prints on the paper, the message “PGL Error” displays on the front panel and the printer goes OFFLINE. You must clear the error before the printer can resume normal operation.
Host	Full error checking reported. Error messages are sent back to the host through the port based on the menu “Ret. Status Port” instead of being printed on paper.
Off	There is no error checking. Graphic elements such as alpha, line, barcodes, etc., will be clipped if they are beyond the page boundaries.
Factory Default	On
IMPORTANT	**This is only shown when PGL is the Active IGP Emulation.**

Application > Control > VGL Diagnostics	
This menu sets the error reporting capability of VGL when selected as the current Active IGP emulation.	
Enable All	Full error checking and report.
Disable	No error checking and report.
Error Msgs	Command syntax is checked and error messages printed when command parameters are incorrect.
Error Markers	Prints the following error markers for those elements that print beyond the page boundaries: >> For elements that begin off the right side of the page. << For elements that begin at the indicated position but end off the page. For elements where the starting position of the command contains an error other than an off-page error.
Offpage Errors	Reports errors for elements that start or end beyond the right edge of the page.
Barcode Errors	An error message will print when invalid barcode data is encountered.
Factory Default	Disable
IMPORTANT	**This is only shown when VGL is the Active IGP Emulation.**

Application > Control > XXX Diagnostics	
This menu sets the error reporting capability of the Active IGP Emulation (except PGL and VGL). “XXX” is used to denote the Active IGP Emulation ZGL, TGL, IGL, STGL, DGL, MGL, EGL, or IEGL.	
Debug Port	Send the information out the debug serial port.
Print	Print the errors on the label.
Disable	No error checking and report.
Factory Default	Disable
IMPORTANT	**For PGL, see *PGL Diagnostics* and for VGL, see *VGL Diagnostics* instead.**

Application > Control > Active LP+ Emul	
This function allows you to select the Active LinePrinter+ protocol. The LP+ is used to print text or jobs that are not associated with any IGP emulation. Refer to the *LinePrinter Plus Programmer's Reference Manual* for more information.	
P-Series	Printronix P-Series language.
P-Series XQ	Printronix P-Series XQ language.
Serial Matrix	Emulates the Serial Matrix protocol.
Proprinter XL	Emulates the Proprinter XL protocol.
Epson FX	Emulates the Epson FX-1050 protocol.
Factory Default	P-Series
IMPORTANT	**The LP+ emulation selections are NOT available when System > Control > Program Select is set to PS/PDF.**

Application > Control > PTX Setup SFCC	
Allows you to choose the hex value of the ASCII character you wish to use as the SFCC for the PTX SETUP command.	
Minimum	hex 01
Maximum	hex FF
Factory Default	hex 21 or the “!” character
IMPORTANT	**The PTX Setup SFCC menu is NOT available in the Postscript/PDF firmware.**

Application > Control > PTX Setup Parse	
Controls whether the PTX SETUP parser will be enabled or ignored.	
Disable	The PTX SETUP parser will be off.
Ignore	The PTX SETUP commands will not have any effect.
Enable	The PTX SETUP commands will be processed.
Factory Default	Enable
IMPORTANT	**The PTX Setup SFCC menu is NOT available in the Postscript/PDF firmware.**

Application > Control > PAA: Select Tool	
You can enable a CST (Character Substitution Table) with this menu. The CST is loaded in the printer FLASH memory and will be executed by the PAA (Printronix Application Adapter). Refer to the *PrintNet Enterprise Suite User's Manual* to learn more about how to create and use CSTs.	
None	No CST will be active.
CST-1	CST-1 is active.
CST-2	CST-2 is active.
Factory Default	None
IMPORTANT	**A CST loaded in the printer FLASH memory can be viewed in the *System* > *Flash File View* submenu and is also visible in the Configuration Printout header.**

Application > Control > Compatibility	
This parameter allows you to make T6000e series thermal printers compatible with other printers. When trying to preserve compatibility with respect to barcodes, you may not always be able to make them equal in size. This is due to the various dot-per-inch differences between printer types. When an exact match cannot be made, the barcode is reduced in size so that the form bounds will not be compromised and the barcode will be readable.	
Default	Use for optimum performance.
Laser	Forces the output to correspond with the Printronix laser line of printers.
P5000	Forces the output to correspond to the P5000 line of line matrix printers.
T3000	Forces the ouput to correspond to the T3000 line of thermal printers.
T1006	Forces the output to correspond to the T1006 line of thermal printers.
Factory Default	Default

Application > Control > PJL Control	
Allows you to choose how the PJL (Printer Job Language) protocol is handled in the printer when sending jobs through the Active IGP Emulation or LP+.	
Disable	PJL commands will be ignored and processed like other emulation data.
Enable	PJL commands will be processed.
Factory Default	Disable
IMPORTANT	**When IPDS or TN is present, the menu setting is not available and treated as “Disable”. When PS/PDF is present, the menu setting is not available and treated as “Enable”.**

Application > IPDS Setup

IMPORTANT **The IPDS Setup submenu will only be present when the IPDS option is installed. The option is not available when System > Control > Program Select is set to TN5250 or PS/PDF.**

Application > IPDS Setup > Default Font		
This item allows you to select the desired default resident font to be used when IPDS is not activating a Font Global ID. Refer to the *IPDS Programmer's Reference Manual* for more information.		
Selections	Courier 10 Prestige 10 Courier it 10 OCRA APL 12 Courier 12 Prestige 12 Courier it 12 Prestige it 12 Boldface PSM Courier 15 Courier 17.1 Gothic 20 Times Roman 6	Times Roman 8 Times Roman 10 Times Roman 12 Times Roman B10 Times Roman B12 Times Roman B14 Times Roman B18 Times Roman B24 Times Roman I10 Times Roman I12 Times Roman BI10 Times Roman BI12 OCRB
Factory Default	Courier 10	

Application > IPDS Setup > Default CodePage		
This item allows you to select the desired default codepage to be used when IPDS is not activating a Code Page ID. Refer to the *IPDS Programmer's Reference Manual* for more information.		
Selections	English/USA/Can English/US/Intl Internat. Set 1 Symbols Set 7 Canadian/French Austrian/German Belgian Old Brazilian Canada (French) Danish/Norw. Finnish/Swedish Italian Japanese Eng. Portuguese Spanish Speak. English (UK) Aust/Germ. (ALT) Dan/Norw. (ALT) Fin/Swed. (ALT) Spanish (ALT) Katakana French Azerty Graphic Escape Int. Typographic Arabic	Greek Hebrew PC Internat. Set 5 Hebrew ALT PC-Multilingual Latin 2/ROECE Icelandic Cyrillic Old OCR A OCR B DCF US Text Subset Turkish Latin 5 Euro US/Can. Euro Aust/Germ. Euro Dan/Norw. Euro Fin/Swed. Euro Italian Euro Spanish Euro UK/Ireland Euro French Euro Internat. Euro Icelandic
Factory Default	English/USA/Can	

Application > IPDS Setup > CodePage Subset	
This item allows you to select the desired version of the following code pages - 037,273, 274, 275, 277, 278, 280, 281, 282, 284, 285, 297, 500, and 871.	
Version 0	
Version 1	
Factory Default	Version 0

Application > IPDS Setup > Emulation	
This item allows you to select the desired IPDS emulation, either 4028 IPDS or 3816 IPDS.	
4028 IPDS	
3816 IPDS	
Factory Default	4028 IPDS

Application > IPDS Setup > Host Form Length	
Enables or disables changing the form length by the host.	
Disable	The host is unable to change the form length.
Enable	The host may change the form length.
Factory Default	Disable

Application > IPDS Setup > Null Suppression	
Controls how the IPDS emulation acts when a 0x00 character is received.	
Disable	When disabled, an exception is generated when the IPDS data stream contains a 0x00.
Enable	When enabled, this option ignores the EBCDIC value 0x00 in the IPDS data stream.
Factory Default	Disable

Application > IPDS Setup > Page Rotation	
This option rotates the physical IPDS page.	
0	No rotation is applied.
90	90 degree clockwise rotation is applied.
180	180 degree rotation is applied.
270	270 degree clockwise rotation is applied.
Factory Default	0

Application > IPDS Setup > VPA Check	
Controls how the IPDS emulation checks for dots that fall outside the intersection of the logical and physical pages and whether an error is reported to the host system.	
Disable	IPDS does not report dots outside the printable area.
Enable	If dots fall outside the printable area, IPDS reports an error to the host if the IPDS Exception Handling Control command setting requires error reporting.
Factory Default	Enable

Application > IPDS Setup > Expanded Fonts	
This option specifies which algorithm is used for expanding a character string in Write Graphics.	
Compatible	A resizing and smoothing algorithm will be performed on the bitmapped font.
Scalable	A substitution will be done to a scalable outline font. Using Scalable will increase performance and quality, however, the substitution will only be done for Latin 1 characters of resident bitmapped fonts, and the type is limited to Courier and Gothic. A scalable font cannot be selected directly, and an LF3 format cannot be downloaded.
Factory Default	Scalable

Application > IPDS Setup > Resident Fonts	
This option selects either a bit-mapped font (“Compatible”) or a scalable font (“Scalable”) as the default font.	
Compatible	Selects a bit-mapped font as default.
Scalable	Selects a scalable font as default.
Factory Default	Compatible

Application > IPDS Setup > XOH-SMO Support	
This option allows the user to disable reporting of XOH-SMO support in the STM reply.	
Disable	Do not report that IPDS has support for XOH-SMO.
Enable	Report that IPDS has support for XOH- SMO.
Factory Default	Enable

Application > IPDS Setup > LF3 Support	
This option allows the user to enable reporting of LF3 type coded font support in the STM and OPC replies. Refer to the IPDS Programmer’s Reference Manual for more information.	
Disable	Do not report that IPDS has support for LF3-type coded fonts..
Enable	Report that IPDS has support for LF3-Type coded fonts.
Factory Default	Disable

Application > IPDS Setup > Hex Dump Mode	
This option can be used for diagnostic purposes to print out a hex dump of the host data received.	
Disable	Not in hex dump mode.
Enable	Enable hex dump mode
Factory Default	Disable

Application > IPDS Setup > Print IPDS Fonts

This executable menu allows you to print a list of all resident fonts currently available in the active IPDS emulation (4028 or 3816). See examples below for both IPDS emulations.

T6306
Resident IPDS Fonts
4028 Emulation

FONT STYLE	FGID Hex	FGID Dec	FONT WIDTH	CPI	PT SIZE	PRINTSAMPLE
OCR B	0003	3	144	10		ABCDEFGHIJabcdefghij0123456789
Courier	000b	11	144	10		ABCDEFGHIJabcdefghij0123456789
Prestige Pica	000c	12	144	10		ABCDEFGHIJabcdefghij0123456789
Courier Italic	0012	18	144	10		*ABCDEFGHIJabcdefghij0123456789*
OCR A	0013	19	144	10		ABCDEFGHIJabcdefghij0123456789
Courier Bold	002e	46	144	10		ABCDEFGHIJabcdefghij0123456789
APL	004c	76	120	12		ABCDEFGHIJabcdefghij0123456789
Courier	0055	85	120	12		ABCDEFGHIJabcdefghij0123456789
Prestige Elite	0056	86	120	12		ABCDEFGHIJabcdefghij0123456789
Courier Italic	005c	92	120	12		*ABCDEFGHIJabcdefghij0123456789*
Prestige Elite Bold	006f	111	120	12		ABCDEFGHIJabcdefghij0123456789
Prestige Elite Italics	0070	112	120	12		*ABCDEFGHIJabcdefghij0123456789*
Document PSM	009f	159	120	PS		ABCDEFGHIJabcdefghij0123456789
Prestige PSM	00a4	164	120	PS		ABCDEFGHIJabcdefghij0123456789
Prestige elite	00dd	221	96	15		ABCDEFGHIJabcdefghij0123456789
Courier	00df	223	96	15		ABCDEFGHIJabcdefghij0123456789
Courier	00fe	254	84	17.1		ABCDEFGHIJabcdefghij0123456789
Prestige Elite	0100	256	84	17.1		ABCDEFGHIJabcdefghij0123456789
Gothic Text	0119	281	72	20		ABCDEFGHIJabcdefghij0123456789
Letter Gothic Bold	0194	404		SC		ABCDEFGHIJabcdefghij0123456789
Courier Bold	01a4	420		SC		ABCDEFGHIJabcdefghij0123456789
Times Roman	1637	5687	40	TYPO	6	ABCDEFGHIJabcdefghij0123456789
Times Roman	1637	5687	53	TYPO	8	ABCDEFGHIJabcdefghij0123456789
Times Roman	1637	5687	67	TYPO	10	ABCDEFGHIJabcdefghij0123456789
Times Roman	1637	5687	80	TYPO	12	ABCDEFGHIJabcdefghij0123456789
Times Roman Bold	164b	5707	67	TYPO	10	ABCDEFGHIJabcdefghij0123456789
Times Roman Bold	164b	5707	80	TYPO	12	ABCDEFGHIJabcdefghij0123456789
Times Roman Bold	164b	5707	93	TYPO	14	ABCDEFGHIJabcdefghij0123456789
Times Roman Bold	164b	5707	120	TYPO	18	ABCDEFGHIJabcdefghij0123456789
Times Roman Bold	164b	5707	160	TYPO	24	ABCDEFGHIJabcdefghij0123456789
Times Roman Italic	16b7	5815	67	TYPO	10	*ABCDEFGHIJabcdefghij0123456789*
Times Roman Italic	16b7	5815	80	TYPO	12	*ABCDEFGHIJabcdefghij0123456789*
Times Roman Bold Ital.	16cb	5835	67	TYPO	10	*ABCDEFGHIJabcdefghij0123456789*
Times Roman Bold Ital.	16cb	5835	80	TYPO	12	*ABCDEFGHIJabcdefghij0123456789*

32 Resident Bitmap Fonts
2 Scalable Fonts

TYPO = Typographic
PS = Proportionally Spaced
SC = Scalable

NOTE: The Scalable fonts are currently rendered at 12 points.
They are scalable to any integer point size.

T6306
Resident IPDS Fonts
3816 Emulation

FONT STYLE	FGID Hex	FGID Dec	FONT WIDTH	CPI	PT SIZE	PRINTSAMPLE
OCR B	0003	3	144	10		ABCDEFGHIJabcdefghij0123456789
Orator	0005	5	144	10		ABCDEFGHIJABCDEFGHIJ0123456789
Courier	000b	11	144	10		ABCDEFGHIJabcdefghij0123456789
Prestige Pica	000c	12	144	10		ABCDEFGHIJabcdefghij0123456789
Courier Italic	0012	18	144	10		*ABCDEFGHIJabcdefghij0123456789*
OCR A	0013	19	144	10		ABCDEFGHIJabcdefghij0123456789
Arabic Kateb	0021	33	144	10		ABCDEFGHIJabcdefghij0123456789
Gothic Text	0028	40	144	10		ABCDEFGHIJabcdefghij0123456789
Katakana Gothic	002c	44	144	10		ABCDEFGHIJabcdefghij0123456789
Gothic Text	0042	66	120	12		ABCDEFGHIJabcdefghij0123456789
Gothic Text Italic	0044	68	120	12		*ABCDEFGHIJabcdefghij0123456789*
Script	0054	84	120	12		ABCDEFGHIJabcdefghij0123456789
Courier	0055	85	120	12		ABCDEFGHIJabcdefghij0123456789
Prestige Elite	0056	86	120	12		ABCDEFGHIJabcdefghij0123456789
Letter Gothic	0057	87	120	12		ABCDEFGHIJabcdefghij0123456789
Prestige Italic	0070	112	120	12		*ABCDEFGHIJabcdefghij0123456789*
Boldface Italic PSM	009b	155	120	PS		***ABCDEFGHIJabcdefghij0123456789***
Essay PSM	00a0	160	120	PS		ABCDEFGHIJabcdefghij0123456789
Essay Italic PSM	00a2	162	120	PS		*ABCDEFGHIJabcdefghij0123456789*
Arabic Yasmin PSM	00a6	166	120	PS		ABCDEFGHIJabcdefghij0123456789
Arabic Expanded PSM	00a9	169	120	PS		ABCDEFGHIJabcdefghij0123456789
Essay Light PSM	00ad	173	120	PS		ABCDEFGHIJabcdefghij0123456789
Document PSM	00af	175	120	PS		ABCDEFGHIJabcdefghij0123456789
Gothic Text	00cc	204	108	13		ABCDEFGHIJabcdefghij0123456789
Serif Text	00e5	229	96	15		ABCDEFGHIJabcdefghij0123456789
Gothic Text	00e6	230	96	15		ABCDEFGHIJabcdefghij0123456789
Courier	00f4	244	288	6		ABCDEFGHIJabcdefgh i0123456789
Courier	00fc	252	84	17		ABCDEFGHIJabcdefghij0123456789
Courier Super/Subscr.	00fe	254	84	17		ABCDEFGHIJabcdefghij0123456789
Arabic Kateb	0109	265	180	8		ABCDEFGHIJabcdefghij0123456789
Gothic Text	0119	281	72	20		ABCDEFGHIJabcdefghij0123456789
Gothic Text	0122	290	54	27		ABCDEFGHIJabcdefghij0123456789
Letter Gothic Bold	0194	404		SC		ABCDEFGHIJabcdefghij0123456789
Courier Bold	01a4	420		SC		ABCDEFGHIJabcdefghij0123456789
Sonoran Serif	1137	4407	54	TYPO	8	ABCDEFGHIJabcdefghij0123456789
Sonoran Serif	1137	4407	66	TYPO	10	ABCDEFGHIJabcdefghij0123456789
Sonoran Serif	1137	4407	78	TYPO	12	ABCDEFGHIJabcdefghij0123456789
Sonoran Serif Bold	114b	4427	66	TYPO	10	ABCDEFGHIJabcdefghij0123456789
Sonoran Serif Bold	114b	4427	108	TYPO	12	ABCDEFGHIJabcdefghij0123456789
Sonoran Serif Bold	114b	4427	162	TYPO	24	ABCDEFGHIJabcdefghij0123456789
Sonoran Serif Italic	11b7	4535	66	TYPO	10	*ABCDEFGHIJabcdefghij0123456789*

39 Resident Bitmap Fonts
2 Scalable Fonts

TYPO = Typographic
PS = Proportionally Spaced
SC = Scalable

NOTE: The Scalable fonts are currently rendered at 12 points.
They are scalable to any integer point size.

Application > TN 5250 Setup

IMPORTANT **The TN 5250 Setup submenu will only be present when System > Control > Program Select is set to TN5250.**

Application > TN 5250 Setup > Primary Sets		
This item chooses the primary character set to be applied.		
Selections	0037 English US 0037 Eng Nether 0500 Swiss Bil 0500 Belg. New 0273 Austr/Germ 0274 Belg. Old 0275 Brazilian 0260 Canad Fren 0277 Danish 0278 Finnish 0297 French 0280 Italian 0281 Japan. Eng 0282 Portuguese 0284 Span Speak 0285 English UK 0892 OCR A 0893 OCR B 0424 Hebrew 0803 Hebrew Old 0420 Arabic 0880 Cyril. Old 0423 Greek Old 875 Gr New Euro	0871 Icelandic 0290 Japan Kata 0870 Latin 2 0838 Thai 1026 Turkish 0890 Yugos. Old 1097 Farsi 1025 Cyrillic 0256 Intern. 1 1112 Balt Mult 0924 Euro Lat-9 1122 Estonian 1140 Euro Eng. 1141 Euro Aust. 1142 Euro Dan. 1143 Euro Finn. 1144 Euro Ital. 1145 Euro Span. 1146 Euro UK 1147 Euro Fren. 1148 Euro Swiss 1149 Euro Ice. 0500 Internat 5
Factory Default	0037 English US	

Application > TN 5250 > Translation Tbl
This executable menu prints a table of the TN 5250 current character set.

Application > TN 5250 > Active Char Set	
Selects which group of character sets (Primary or Secondary) will be active.	
Primary Set	The primary set will be active.
Secondary Set	The secondary set will be active.
Factory Default	Secondary Set

Application > TN 5250 Setup > Secondary Sets		
This item chooses the secondary character set to be applied.		
Selections	English US Austrian/German Belgian Brazilian Canadian French Danish/Norweg. Finnish/Swedish French Italian Japanese Eng. Japanese Katak. Portuguese Spanish	Spanish Speak. English UK Old Hebrew Hebrew Farsi/Latin Greek Old Greek New Arabic Turkish Latin 2/ROECE Yugoslavian Multinational
Factory Default	English US	

Application > TN 5250 > Lead-in Chars	
You can enable additional printer features which are not accessible through standard coax emulations. To access these features, send text commands in the data stream. The commands must have a start and end code. Three sets (each containing a start and end code) are available or the user can choose User Defined.	
Set 1 <%>	Start code is “<%”. End code is “>”.
Set 2 ¬¬$	Start code is “¬¬”. End code “$”.
Set 3 _%_	Start code is “_%”. End code “_”.
User Defined	The codes are user defined per the menus *User Defined St1*, *User Defined St2*, and *User Defined Stp*.
Factory Default	Set 1 <%>
IMPORTANT	**When User Defined is chosen, the menus *User Defined St1*, *User Defined St2*, and *User Defined Stp* will be unhidden.**

Application > TN 5250 > User Defined St1	
This option allows you to define your own value (in ASCII characters) for the User Defined option in the Lead-in Chars menu. “St1” specifies Start Code 1. See *Application > TN 5250 > Lead-in Chars* for additional information.	
Minimum	Hex 40
Maximum	Hex FF
Factory Default	5F
IMPORTANT	**This option only appears if *Application > TN 5250 > Lead-in Chars* option is set to “User Defined”.**

Application > TN 5250 > User Defined St2	
This option allows you to define your own value (in ASCII characters) for the User Defined option in the Lead-in Chars menu. “St2” specifies Start Code 2. See *Application > TN 5250 > Lead-in Chars* for additional information.	
Minimum	Hex 40
Maximum	Hex FF
Factory Default	5F
IMPORTANT	**This option only appears if *Application > TN 5250 > Lead-in Chars* option is set to “User Defined”.**

Application > TN 5250 > User Defined Stp	
This option allows you to define your own value (in ASCII characters) for the User Defined option in the Lead-in Chars menu. “Stp” specifies Stop Code. See *Application > TN 5250 > Lead-in Chars* for additional information.	
Minimum	Hex 40
Maximum	Hex FF
Factory Default	5B
IMPORTANT	**This option only appears if *Application > TN 5250 > Lead-in Chars* option is set to “User Defined”.**

Application > TN 5250 > Alt. Set 80-9F	
This option allows you to choose how data in the range hex 80 through hex 9F is handled.	
Printable	Prints data in the range of hex 80 through hex 9F.
Control Code	Interprets data in the range of hex 80 through hex 9F as control codes.
Factory Default	Printable

Application > TN 5250 > Graphic Chek Err	
Allows overriding of the host setting for the SGEA (Set Graphic Error Action) command. For more information about the SGEA command, refer to the Coax/Twinax Programmer's Reference Manual used on the T5R-ES series.	
Disable	Ignores the SGEA command from the host. The printer does not stop when an error is detected; instead, it substitutes the character selected in the *Graphic Chek Cod* parameter.
Enable	The host setting for the SGEA used by the printer. If the SGEA command is requested to stop on graphic errors, the printer will stop when a graphic error is detected.
Factory Default	Enable

Application > TN 5250 > Graphic Chek Cod	
Specifies the replacement character to print in place of any unprintable character that is received from the host. Choose a hex character from hex 40 through hex FE. The character becomes the printer default when: • The printer is powered off and then powered on. • An SGEA command specifies to use the operator panel default. • The *Graphic Chek Err* parameter is disabled.	
Minimum	Hex 40
Maximum	Hex FE
Factory Default	60

Application > TN 5250 > Set Text Orientn	
Specifies the direction in which characters are printed on the page. This allows the printer to print languages which are printed right to left instead of left to right.	
Left to Right	Prints characters left to right.
Right to Left	When you select a right to left language, the host will be notified of print direction changes when the printer is put ONLINE.
Factory Default	Left to Right

Application > TN 5250 > Host Override	
Determines whether the printer accepts certain commands sent by the host, or continues to use the current menu settings as follows: • *Application > LP+ Setup > Form Width (chars)* • *Application > LP+ Setup > Form Length (lines)* • *Application > LP+ Setup > Select LPI* • *Application > LP+ Setup > Select CPI* • *Application > LP+ Setup > Typeface* • *Application > LP+ Setup > Text Position*	
Disable	Allows LP+ host commands to override menu settings as shown above. Note the information appearing on the message display may not match the data stream setting. No values will change upon initial selection of the *Disable* option.
Enable	The menu settings override the host commands.
Factory Default	Disable

Application > TN 5250 > Format Control	
Enables the printer to reflect the same spacing as CTPC model printers after absolute and relative move commands are executed.	
Disable	Reflects distance, generated by the IGP feature, and Hex Transparent control code sequence, in the new position (after horizontal and vertical tabs are executed).
Enable	Does not reflect distance, generated by the IGP feature, and Hex Transparent control code sequence, in the new position (after horizontal and vertical tabs are executed).
Factory Default	Disable

Application > TN 5250 > Max. Print Width	
Set the maximum print width the printer will print when using the TN5250 host interface. Set “13.2 inches” when printing files larger than the width of the printer. All data exceeding *Media* > *Image* > *Label Width* will be truncated regardless.	
13.2 inches	13.2 inches (legacy from line matrix products).
Printer Width	The maximum as set by *Media* > *Image* > *Label Width*.
Factory Default	13.2 inches

Application > PS/PDF

IMPORTANT **The PS/PDF submenu is present only when System > Control > Program Select is set to PS/PDF.**

The Postscript/PDF data is handled by Ghostscript by Artifex, an interpreter compatible with the following:

- Portable Document Format ("PDF") 1.0, 1.1, 1.2, 1.4, 1.5, and 1.6 as defined in the Portable Document Format Reference Manual, distributed by Adobe Systems Incorporated.
- PostScript (TM) Language Level 3, as defined in the PostScript Language Reference Third Edition (ISBN 0-201-37922-8), published by Addison- Wesley in mid-1999.

Ghostscript includes a set of 35 scalable outline fonts in PostScript Type 1 format, compatible in appearance and metrics with the fonts commonly distributed under the following names:

- Bookman (demi, demi italic, light, light italic)
- Courier ((plain, oblique, bold, bold oblique)
- Avant Garde (book, book oblique, demi, demi oblique)
- Helvetica (plain, oblique, bold, bld oblique narrow, narrow oblique, narrow bold, narrow bold oblique)
- Palatino (roman, italic, bold, bold italic)
- New Century Schoolbook (roman, italic, bold, bold italic)
- Times (roman, italic, bold, bold italic)
- Symbol
- Zapf Chancery (medium italic)
- Zapf Dingbats

The Ghostscript version used in the P8000 is 8.71.

Application > PS/PDF > Host Form Length	
This option selects whether job sent with specific page dimensions will change the settings under *Media* > *Image* > *Label Length*.	
Disable	The job will not affect the media label length setting.
Enable	The job will change the media label length setting.
Mismatch Error	A fault will occur if the length sent with the host job does not match the *Media* > *Image* > *Label Length* value.
Factory Default	Enable

Application > PGL Setup

IMPORTANT **The PGL Setup submenu will only be present when the Active IGP Emulation is set to PGL. Otherwise, this menu will be replaced with the Active IGP Emulation Setup menu.**

Application > PGL Setup > Character Group
This option selects the Character Set Group. Based on the group selected, then the character set can be chosen with the menu following *XXX Sets*. The group Standard Sets is shown below because it is unique to PGL. All other groups are similar and described in *LP+, PGL, VGL Character Sets.*

Application > PGL Setup > Standard Sets		
This option will show when menu Character Group is set to Standard Sets.		
Standard Sets	0) ASCII 1) German 2) Swedish 3) Danish 4) Norwegian 5) Finnish 6) English 7) Dutch 8) French	9) Spanish 10) Italian 11) Turkish 12) CP 437 13) CP 850 14-15) Reserved 16-23 Dwn Overlay 24-31) User Def.
Factory Default	0) ASCII	

Application > PGL Setup > Select LPI	
This is the number of lines to be printed per inch. For example, at 6 lpi there is 1/6 inch from the top of one print line to the top of the next print line.	
Minimum	1
Maximum	1000
Factory Default	6

Application > PGL Setup > Define CR Code	
This option controls the action of the printer when it receives a Carriage Return code (0D hex) from the host computer. If this feature is enabled, each time the printer receives a Carriage Return, it inserts an additional Line Feed code (0A hex) into the data stream. Do not use this feature if the host computer sends line feeds to the printer.	
CR = CR	Does not insert an extra line feed after each carriage return.
CR = CR+LF	Inserts an extra line feed after each carriage return. The next print position will be print position 1 of the next line.
Factory Default	CR = CR

Application > PGL Setup > Define LF Code	
This parameter forces the printer to insert an automatic Carriage Return into the data stream whenever a Line Feed occurs. This can be used in most installations, but it is required if the host computer does not send carriage returns to the printer.	
LF = LF	Does not perform an automatic carriage return. The next print position will be at the current print character position on the next line.
LF = CR + LF	Performs an automatic carriage return. The next print position will be print position 1 of the next line.
Factory Default	LF = LF

Application > PGL Setup > Autowrap	
This parameter determines if text will wrap to the next line when the line of text exceeds the right margin.	
Disable	Truncates the text beyond the right margin until a CR or CR + LF is received.
Enable	Automatically inserts a CR + LF after a full print line.
Factory Default	Disable

Application > PGL Setup > Auto Uppercase	
This parameter enables the printer to print text in all uppercase when using the ALPHA command.	
Disable	The printer will print text in upper and lowercase.
Enable	The printer will print text in uppercase only.
Factory Default	Disable

Application > PGL Setup > Slash 0	
This parameter allows you to print the numeral “0” with or without the slash.	
Disable	Zero is printed without a slash.
Enable	Zero is printed with a slash.
Factory Default	Disable
IMPORTANT	**This option does not apply to OCR A or OCR B.**

Application > PGL Setup > Select SFCC	
You can specify which decimal code (1-255) will be used as the Special Function Control Code (SFCC). The SFCC denotes that the following data is a PGL command.	
Minimum	1
Maximum	255
Factory Default	126

Application > PGL Setup > Host Form Length	
Determines how *Media* > *Image* > *Label Length* is affected upon receiving an EXECUTE command.	
Enable	The physical label length will change to match the form length (specified in CREATE command). The physical label size remains at the new setting until another EXECUTE command is received, or the PRINTER CONTROL menu settings are changed.
Var. Length	The physical label length is the longest element defined in CREATE mode. Works with CREATE;NAME;0. This includes all dynamic elements whether used in EXECUTE mode or not.
Var Dynamic Len	The physical label length will change to the longest print element used in EXECUTE mode plus the setting of “Var Form Adjust.” Works with CREATE;NAME;0. If dynamic elements are not used in EXECUTE mode, they are not included.
Disable	Forms printed in EXECUTE mode do not change the physical label size. Therefore, the size of the form (defined in CREATE mode) must fit within the current label dimensions, or errors may be reported.
Factory Default	Enable
IMPORTANT	**Changing the form length via the EXECUTE command changes the LP+ Emulation logical dimensions.**

Application > PGL Setup > Var Form Adjust	
This specifies an amount (in tenths of inches) to add to the length of variable- length forms. Variable-length forms use a semicolon at the end of the CREATE command: ~CREATE;<FORMNAME>;0. Typically, variable-length forms are determined by the elements within the form. The longest form element becomes the overall form length. This option allows an additional space to be added to the form length.	
Minimum	0.0 inches
Maximum	3.0 inches
Factory Default	0.0 inches

Application > PGL Setup > Var Form Type	
This parameter allows you to manipulate forms created with the CREATE command to include variable form length parameters.	
Add Nothing	When selected, no action is taken.
Add ;0	When selected, the form length ends at the longest printed element. (Same as ~CREATE;filename;0).
Add ;X	When selected, the form length is set to match the value in *Media* > *Image* > *Label Length*.
Factory Default	Add Nothing

Application > PGL Setup > Skip Cmd Prefix	
Stands for Skip Command Prefix. This parameter determines if the printer will print any data before a PGL command is received.	
Disable	The printer will print all data before a PGL command.
Enable	The printer ignores all data before a PGL command.
Factory Default	Enable

Application > PGL Setup > Ignore Text	
Determines if text in NORMAL mode will be printed or ignored.	
Disable	When disabled, text in normal mode will be printed. Attributes to be printed depend on the PGL Normal menu setting.
Enable	When enabled, any line of text (non-PGL commands) in normal mode will be ignored.
Factory Default	Disable

Application > PGL Setup > Ext Execute Copy	
Determines if dynamic text or overlay data is allowed when the Form Count parameter (number of forms to print) is used as part of the EXECUTE command.	
Disable	Dynamic data, overlay data, etc. are not allowed if the optional Form Count parameter is specified (IGP-100 compatible).
Enable	Dynamic data, overlay data, etc. are allowed within a form where the Form Count parameter is specified. In this case, the same form is printed for whatever the Form Count is.
Factory Default	Disable
IMPORTANT	**When enabled, incremental data is not incremented since the printing page is the same.** **Overlay data is only printed with the first form and not on subsequent forms, and each form is printed on a separate page.**

Application > PGL Setup > AI 00 Spaces	
This option is designated for EAN/UCC-128 barcodes whose application identifier (AI) is 00.	
Disable	The printable data field is printed with the AI enclosed in parentheses. This is the standard EAN/UCC-128 format.
Enable	The printable data field is printed with the UCC fields separated by spaces. This option is IGP-X00 compatible.
Factory Default	Disable

Application > PGL Setup > Select SO Char	
Allows you to specify a decimal code from 0 through 255 to be used in place of SO (Shift Out) as the control code which allows access for the alternate set of control function characters. See the description of the Code 128 barcodes in the *PGL Programmer's Reference Manual* for details.	
Minimum	0
Maximum	255
Factory Default	14

Application > PGL Setup > Ignore Mode	
This parameter instructs the IGP to ignore the character selected under the Select Character menu.	
Disable	The IGP does not ignore any characters.
Enable	The IGP ignores the character specified in the Select Char menu.
Factory Default	Disable

Application > PGL Setup > Select Char	
Instructs the IGP which decimal character (0-255) to ignore from the host.	
Minimum	0
Maximum	255
Factory Default	0

Application > PGL Setup > Do FF at TOF	
Determines whether the printer, with media already set at the TOF (Top-of-Form) position, will advance media to the next TOF position upon receipt of an FF command.	
Disable	The printer will not advance media from the present TOF position to the next TOF position upon receipt of an FF command.
Enable	The printer will advance media from the present TOF position to the next TOF position upon receipt of an FF command, causing a blank form.
Factory Default	Enable

Application > PGL Setup > IGP100 Compatbl.	
This parameter forces the output to correspond with IGP-100 line matrix printer output in cases where there are differences.	
Disable	In areas of conflict, the printer will be compatible with legacy thermal products (best behavior).
Enable	The printer will match compatibility in all ways with legacy line matrix products.
Factory Default	Disable

Application > PGL Setup > Forms Handling	
This submenu allows the user to handle the form in various ways.	
Disable	Standard behavior.
Auto Eject	Automatically ejects a page at the end of the job to spill out the last page.
Auto TOF	Automatically does a form feed (FF) at the end of each form to the next top of form.
Factory Default	Disable

Application > PGL Setup > PGL Normal	
This option determines whether PGL passes the text data in Normal mode according to LP+ or whether PGL will print the text data itself.	
LP+ Menu	PGL will pass the text data to LP+ only in the default setting state (6 LPI, default character set, and font attribute).
PGL Menu	PGL will always print the text data itself.
Factory Default	LP+ Menu

Application > PGL Setup > UPC Descenders	
This parameter allows you to print bar code descenders when human readable data is not presented in the UPC/EAN bar codes.	
Always	UPC/EAN bar codes are printed with descenders, even if there is no human readable data.
Never	UPC/EAN bar codes are printed without descenders if the PDF command is present.
Only with PDF	UPC/EAN bar codes are printed with descenders only when the PDF command is presented.
Factory Default	Always

Application > PGL Setup > I-2/5 Selection	
This option is added to be compatible with a special IGP-X00 customization. Usually, if Interleaved 2/5 bar codes have an odd number of digits, a leading zero is inserted in front of the data. However, this special IGP-X00 customization gives you the option of adding a space character at the end of the bar code instead.	
Leading Zero	A leading zero is inserted in front of the data.
Trailing Space	A space is inserted at the end of the data instead of a leading zero.
X2 DPD	When selected, I-2/5 bar code with a magnification X2 will use the specially configured ratios 3:3:6:5 rather than 3:6:9:12 for compatibility issues.
Modulo 7 CD	The I-2/5 bar code uses a modulo 7 check digit instead of the default modulo 10 check digit.
Factory Default	Leading Zero

Application > PGL Setup > C39 Compatbl.	
This menu makes the old method of decoding C39 alternative character set compatible with the new.	
Disable	Uses the proper way of decoding.
Enable	Matches the old legacy IGP-100 method of decoding.
Factory Default	Disable

Application > PGL Setup > User-Def Ratio	
This option allows you to ignore the user-defined barcode ratio and replace it with the default ratio (X1).	
Disable	The user-defined barcode ratio will be replaced with the default ratio (X1).
Enable	This option allows you to ignore the user-defined barcode ratio and replace it with the default ratio (X1).
Factory Default	Enable

Application > PGL Setup > Lead PDF Dist	
Adjusts the leading and trailing character spacing distance of the PDF for UPC/EAN barcodes. The value can be modified in 0.01 inch increments.	
Minimum	0.01 inches
Maximum	0.10 inches
Factory Default	0.10 inches

Application > PGL Setup > Trunc Dyn Data	
This menu allows the user to truncate the dynamic data up to the maximum data length specified in Create Mode.	
Disable	If the dynamic data exceeds the maximum data length, an error will report.
Enable	If the dynamic data exceeds the maximum data length, the data truncates.
Factory Default	Disable

Application > PGL Setup > Boundary Check	
This option turns on or off the page boundary check for all print elements.	
Disable	No out of bound error is reported. The out of bound print element prints over the page boundary.
Enable	An out of bound error is reported if the print element is out of the page boundary.
Factory Default	Enable

Application > PGL Setup > Preparser	
Allows you to send preparser commands to the printer through any port.	
Disable	Not using the Preparser command.
Enable	The preparser command can be accepted from any port.
Factory Default	Disable

Application > PGL Setup > Storage Select	
Allows the user to map the parameter DISK to either DRAM, SD (SD card) or FLASH memory.	
Disk=DRAM	Have the DISK command default to the DRAM which means the data will be lost upon next reboot.
Disk=SD	Have the DISK command default to the SD card.
Disk=PCB Flash	Have the DISK command default to the FLASH memory.
Factory Default	Disk=SD

Application > VGL Setup

IMPORTANT **The VGL Setup submenu will only be present when the Active IGP Emulation is set to VGL. Otherwise, this menu will be replaced with the Active IGP Emulation Setup menu.**

Application > VGL Setup > Select SFCC	
This option selects the Special Function Control Code. Run a configuration printout to determine the currently selected SFCC.	
Minimum	17
Maximum	255
Factory Default	caret ^ (decimal 94)

Application > VGL Setup > Power-up ^X	
Determines if VGL is active at power-up or if all the data will be passed down to the LP+ emulation for processing.	
Disable	VGL is ready to process data.
Enable	VGL starts in ignore mode. The graphics mode ^PY is set as the power-up default. All characters are ignored until a ^A command is received.
Factory Default	Disable

Application > VGL Setup > Power-up ^F	
Determines if VGL will be in free format mode at power-up. Free format mode is when VGL ignores carriage returns, line feeds, and all characters below 20 hex sent from the host.	
Disable	VGL is not in free format mode.
Enable	VGL starts in free format mode and ignores all characters below 20 hex.
Factory Default	Disable

Application > VGL Setup > Power-up ^PY	
Determines if VGL will be in graphics mode at power-up.	
Disable	VGL is not in graphics mode.
Enable	VGL starts in graphics mode at power-up.
Factory Default	Disable

Application > VGL Setup > LPI	
Sets the LPI that will be used in VGL forms.	
Minimum	6
Maximum	10
Factory Default	6

Application > VGL Setup > Btm Margin Ctl	
Determines the page's bottom margin.	
LP+ Menu	A change in text length has no effect, and the bottom margin setting in the LP+ Emulation menu will be used, although the new text length value still shows in the menu.
VGL Text Length	Text length changes the bottom margin value in the LP+ Emulation submenu as follows: Bottom = physical page length-top margin-text length.
Factory Default	LP+ Menu

Application > VGL Setup > Text Length	
Text Length is the printable length on the page below the top margin.	
Minimum	1
Maximum	255
Factory Default	66

Application > VGL Setup > Autoeject	
Determines paper handling upon exiting the VGL Repeated Form and Dynamic Form commands.	
Disable	Holds the print position at the bottom of the form.
Enable	Issues a form feed after the last form is printed so all pages will be physically printed.
Factory Default	Disable

Application > VGL Setup > Copy Count	
Determines the number of identical copies of each physical page that will be printed.	
Minimum	1
Maximum	999
Factory Default	1

Application > VGL Setup > Host Form Length	
Sets the printer page size when a form length command from the host application is received.	
Disable	Sets the printer label size equal to the Label Length set in *Media* > *Image* > *Label Length*.
Enable	Sets the printer label size equal to Label Length from the host form length command. (For more information, refer to the *VGL Programmer's Reference Manual*).
Factory Default	Enable

Application > VGL Setup > Slash 0	
This parameter allows you to print the numeral “0” with or without the slash. This option applies to all character sets except OCR A and OCR B.	
Disable	Zero is printed without a slash.
Enable	Zero is printed with a slash.
Factory Default	Disable

Application > VGL Setup > Repeat Form	
When enabled, this menu speeds up the label printing for repeated form. This only applies to forms where the entire form is enclosed in the command: ^IREPV...^IREPE	
Disable	Should be selected when subsequent forms are unrelated to one another.
Enable	Speeds up the processing of repeated forms, thereby resulting in increased printer throughput. This option provides no speed benefit for forms that are unrelated to one another and should be disabled under those circumstances.
Factory Default	Enable

Application > VGL Setup > Ignore Dots	
Controls how VGL interprets position values.	
Disable	The VGL expects position values to be specified in tenth inches and dot rows.
Enable	Causes the VGL to expect position values to be specified in only 1/10ths of an inch. If the dot position is also given, it is treated as text.
Factory Default	Disable

Application > VGL Setup > Append Rotated	
Determine if logos and alphanumeric strings are treated as separate elements or appends logos to alphanumerics.	
Disable	Logos and alphanumeric strings are treated as separate elements.
Enable	Appends logos to an alphanumeric.
Factory Default	Disable

Application > VGL Setup > Truncate Alpha	
Prevents the printing of Error 48 (Element Off Page Error) if alphanumeric data, including spaces, extends beyond the right side of the form.	
Disable	Prints Error 48 if the right side of the form is violated.
Enable	Inhibits Error 48 and prints the form regardless.
Factory Default	Enable

Application > VGL Setup > True Vert 1/10	
Determines how line lengths are calculated – used for compatibility.	
Disable	When disabled and in High Resolution, a vertical line's length in one inch and 1/10 inch increments is interpreted as 70/72 inch and 7/72 inch respectively.
Enable	When enabled, a vertical line's length is interpreted exactly, which is 72/72 inch in one inch increments.
Factory Default	Disable

Application > VGL Setup > Absorb After ^PY	
Determines how data after the ^PY command will be handled.	
Absorb Motion	The paper motion line terminator immediately following the graphics ^PY command will be ignored.
Absorb All	The system ignores all the data following ^PY until a host generated terminator is detected and ignored.
Disable	System terminators following a graphics command are sent to the printer and result in paper motion.
Factory Default	Absorb Motion

Application > VGL Setup > UPC Descenders	
Determines how descenders will be printed on UPC/EAN bar codes when there is no human readable data included.	
Disable	UPC/EAN bar codes are printed without descenders if there is no human readable data.
Enable	UPC/EAN bar codes are printed with descenders, even if there is no human readable data.
Factory Default	Enable

Application > VGL Setup > Select SO Char	
Allows you to specify a decimal code from 0 through 255 to be used in place of SO (Shift Out) as the control code which allows access for the alternate set of control function characters for Code 128 barcodes. See the description of the Code 128 barcodes in the *VGL Programmer's Reference Manual* for details.	
Minimum	0
Maximum	255
Factory Default	14

Application > VGL Setup > Rot. Char Size	
Determines how expanded characters will be sized when rotated.	
Adjusted	Rotated (clockwise/counterclockwise), expanded characters have a different size than an unrotated character with the same size parameters.
Not Adjusted	Rotated, expanded characters will be the same size as unrotated characters with the same size parameters.
Factory Default	Adjusted

Application > VGL Setup > Ignore Spaces	
Controls how trailing spaces are treated within alphanumeric elements.	
Disable	Trailing spaces are not deleted from alphanumeric elements in a graphics pass.
Enable	Trailing spaces are deleted from alphanumeric elements in a graphics pass.
Factory Default	Disable

Application > VGL Setup > Ignore ^Lxx Cmd.	
Controls how VGL handles form length commands.	
Disable	The Form Length commands ^Lxx and ^Hxx will be used from the VGL application.
Enable	The Form Length commands ^Lxx and ^Hxx will be ignored, and the form length will be determined by *Application > LP+ Setup > Form Length* (xx).
Factory Default	Disable

Application > VGL Setup > Midline PY	
Controls whether the ^PY command will be allowed in the middle of a line.	
Disable	The Graphics mode Enabled command, ^PY, must be the first three characters of a line.
Enable	The ^PY or ^PN can occur anywhere in a line.
Factory Default	Disable

Application > VGL Setup > Width Limit	
Controls the range of width for expanded characters based on the height.	
Disable	There is no limit to width based on height.
Enable	The length and width for expanded characters is shown in the *Width Limit Table*, which shows the maximum width allowed for a specific height in the range of 00 through 40 (0.0 through 4.0 inches).
Factory Default	Disable

Width Limit Table			
Height Param.	**Max. Width Allowed**	**Height Param.**	**Max. Width Allowed**
00	99	21	51
01	99	22	53
02	3	23	56
03	6	24	58
04	8	25	61
05	11	26	63
06	13	27	66
07	16	28	68
08	18	29	71
09	21	30	73
10	23	31	76
11	26	32	78
12	28	33	81
13	31	34	83
14	33	35	86
15	36	36	88
16	38	37	91
17	41	38	93
18	43	39	96
19	46	40	98
20	48		

Application > VGL Setup > Absorb After ^PN	
Determines how paper motion line terminators are handled after the ^PN command.	
Disable	The paper motion line terminators that immediately follow the ^PN command are sent to the printer and processed.
Enable	The paper motion line terminators that immediately follow the ^PN command are ignored.
Factory Default	Disable

Application > VGL Setup > Expanded Font	
Expanded font allows you to print characters in different sizes with specified parameters and allows you to select block or non-block font face.	
Scalable	Uses Gothic font as default. Other font faces can be selected by using the IFONT command.
Block	Uses Block fonts.
Factory Default	Scalable

Application > VGL Setup > Auto FF at ^PN	
When enabled, an FF will be generated automatically to slew to the end of form when the ^PN command is encountered and when the current vertical position is not at the top-of-form.	
Disable	No FF generated upon ^PN command.
Enable	FF is generated upon ^PN command.
Factory Default	Disable

Application > VGL Setup > PDF Size Comp	
This option is for compatibility of the font size of the barcode printable data field (PDF) on older firmware.	
Disable	Uses the normal font size.
Enable	Matches the older firmware font size.
Factory Default	Disable

Application > VGL Setup > C128 Mode Comp.	
This option is for compatibility with mode switches for Code 128 barcodes.	
Disable	Uses the normal auto switch for optimum barcodes.
Enable	Matches the older firmware auto switch algorithm.
Factory Default	Disable

Application > VGL Setup > C39 Compatbl.	
This menu makes the old method of decoding C39 alternative character set compatible with the new.	
Disable	Uses the better and more flexible way of decoding.
Enable	Matches the old method of decoding.
Factory Default	Disable

Application > VGL Setup > Ignore Chars	
This menu is used for character filtering in the application stream.	
Disable	Uses the better and more flexible way of decoding.
Char 1	Character 1 will be filtered. Select the VGL menu option “Ignore Ch#1” to specify character 1.
Char 2	Character 2 will be filtered. Select the VGL menu option “Ignore Ch#2” to specify character 2.
Char 1&2	Character 1 and 2 will be filtered. Select the VGL menu options “Ignore Ch#1” and “Ignore Ch#2” to specify character values to be ignored.
Factory Default	Disable

Application > VGL Setup > Ignore Ch#1	
Specifies character 1 for the character filtering option. Valid decimal values are from 0 through 255.	
Minimum	0
Maximum	255
Factory Default	0

Application > VGL Setup > Ignore Ch#2	
Specifies character 2 for the character filtering option. Valid decimal values are from 0 through 255.	
Minimum	0
Maximum	255
Factory Default	0

Application > VGL Setup > Data Bit 8	
Determines how data bit 8 is interpreted and is traditionally used for the parallel interface. Either data bit 8 represents the data value (80-FF hex) or is used for the PI line.	
Disable	When the host PI line is enabled, data bit 8 internally indicates PI line status. To use the PI line, disable data bit 8, and enable the Host PI configuration option (under the PI Ignored option).
Enable	The PI line is not passed directly from host to printer; all 8 bits are used for data bits, and characters in the hex 80-FF range can be accessed.
Factory Default	Enable
IMPORTANT	Data bit 8 is interpreted as either data bit 8 or PI signal, but never both. When enabled as data bit 8, data bit 8 has priority over the PI signal, and all data above hex 7F is used to access character data and not to interpret PI line data. Conversely, when data bit 8 is disabled and PI signal is used, data bit 8 of the data is reserved for use as the PI function, and you cannot access characters in the hex 80-FF range. Therefore, to access characters in the hex 80-FF range, data bit 8 must be enabled.

Application > VGL Setup > Cmd Resolution	
Chooses between low and high resolution mode for graphics.	
Low Resolution	Sets a low command resolution mode.
High Resolution	Sets a high command resolution mode.
Factory Default	Low Resolution

Application > VGL Setup > ^Dnn Dot Slew	
Chooses between low and high resolution mode for dot row slewing.	
Low Resolution	Sets the dot slew command dot values to be interpreted as 60 dpi P-Series dots.
High Resolution	Sets the dot slew command dot values to be interpreted as print engine dots.
Factory Default	Low Resolution

Application > VGL Setup > Barcode var.	
This command only applies for IBARC barcode command format.	
Low Resolution	Sets barcode ratio dot values to be interpreted as line matrix printer dots (60 x72).
High Resolution	Sets barcode ratio dot values to be interpreted as print engine dots (300 x 300 or 203 x 203).
Factory Default	Low Resolution

Application > VGL Setup > Character Group
This option selects the Character Set Group. Based on the group selected, then the character set can be chosen with the menu following *XXX Sets*. The group Standard Sets is shown below because it is unique to VGL. All other groups are similar and described in *LP+, PGL, VGL Character Sets.*

Application > VGL Setup > Standard Sets		
This option will show when menu Character Group is set to Standard Sets.		
Standard Sets	0) ASCII 1) German 2) Swedish 3) Danish 4) Norwegian 5) Finnish 6) English	7) Dutch 8) French 9) Spanish 10) Italian 11) Turkish 12) CP 437 13) CP 850
Factory Default	0) ASCII	

Application > VGL Setup > Uniform Fonts	
This menu determines how the typeface selected will be used across different modes.	
Disable	The typeface selected while in Extended Graphics Mode will be cancelled when the graphics pass is complete.
Enable	The typeface selected while in Extended Graphics Mode will also be used in Standard Graphics Mode and Normal Mode.
Factory Default	Disable

Application > VGL Setup > Prop Line Length	
This menu determines how the position of the next graphic element is determines based on the string that precedes it.	
Disable	The position of the next graphic element will be determined as if the font was monospaced (all characters had the same specified width).
Enable	The position of the next graphic element will be determined by the physical length of a text string (when using a proportional spaced font).
Factory Default	Enable

Application > VGL Setup > Printer PI	
This menu determines how the PI line is configured in the LP+ emulation.	
Disable	The LP+ Emulation is configured with the PI line disabled.
Enable	The LP+ Emulation is configured with the PI line enabled.
Factory Default	Disable

Application > VGL Setup > Host PI	
This menu determines how the host PI line for the parallel interface is configured.	
Disable	The host does not send PI signals.
Enable	The host sends PI signals. The Data Bit 8 configuration option must be disabled to transmit the PI line to the printer.
Factory Default	Disable

Application > VGL Setup > Max PI 16	
This menu determines the range of a paper slew from the PI line.	
Disable	A paper slew of 1-15 will move 1-15 lines. A paper slew of 0 will always move 1 line.
Enable	A paper slew of 0-15 will move 1-16 lines.
Factory Default	Enable

Application > ZGL SETUP

Refer to the *ZGL Programmer's Reference Manual.*

Application > TGL SETUP

Refer to the *TGL Programmer's Reference Manual.*

Application > IGL SETUP

Refer to the *IGL Programmer's Reference Manual.*

Application > STGL SETUP

Refer to the *STGL Programmer's Reference Manual.*

Application > DGL SETUP

Refer to the *DGL Programmer's Reference Manual.*

Application > IEGL SETUP

Refer to the *IEGL Programmer's Reference Manual.*

Application > MGL SETUP

Refer to the *MGL Programmer's Reference Manual.*

Application > LP+ SETUP

IMPORTANT **This option is not available when System > Control > Program Select is set to PS/PDF.**

Application > LP+ Setup > Select CPI	
This item selects the characters per inch (CPI) value.	
Selections	10.0, 12.0, 13.3, 15.0, 17.1, and 20.0 CPI
Factory Default	10.0 CPI

Application > LP+ Setup > Select LPI	
This is the number of lines to be printed per inch. For example, at 6 LPI there is 1/6 inch from the top of one print line to the top of the next print line.	
Selections	6.0, 8.0, 10.3 LPI
Factory Default	6.0 LPI

Application > LP+ Setup > Host Command	
This item allows you to select certain host commands to be ignored by the printer.	
Enable	All host commands accepted by printer.
Ignore All	All commands are ignored.
Ignore CPI	All CPI commands are ignored.
Ignore LPI	All LPI commands are ignored.
Factory Default	Enable

Application > LP+ Setup > Typeface	
The font style or typeface to be used when printing text.	
Letter Gothic	Letter Gothic is a non-proportional font where all of the characters take up the same amount of space when printed.
Courier	Courier is a non-proportional (monospaced) font where all characters take up the same amount of space when printed.
OCR-A	Optical character recognition font prints only at 10 cpi.
OCR-B	Optical character recognition font prints only at 10 cpi.
Factory Default	Letter Gothic

Application > LP+ Setup > Prop. Spacing	
Each printed character is contained inside a character cell. The width of the character cell includes the character and the space around the character.	
Disable	Each character cell is printed with the same width. Each column in the printed text will line up.
Enable	The width of each character cell varies with the width of the character. For example, ‘i’ takes less space to print than ‘m’. Using proportional fonts generally increases the readability of printed documents, giving text a typeset appearance.
Factory Default	Enable

Application > LP+ Setup > Bold	
To determine if the text printed by the LP+ uses a heavy thickness.	
Disable	Text is printed normally.
Enable	Text is printed with a heavy thickness.
Factory Default	Disable

Application > LP+ Setup > Italic Print	
To determine if the text printed by the LP+ uses italics.	
Disable	Text is printed normally.
Forward Slant	Text is printed with a forward slant.
Backward Slant	Text is printed with a backward slant.
Factory Default	Disable

Application > LP+ Setup > Slashed Zero	
This parameter allows you to print the numeral ‘0’ with or without the slash.	
Disable	Zero is printed without a slash.
Enable	Zero is printed with a slash.
Factory Default	Disable
IMPORTANT	**This option does not apply to OCR-A or OCR-B.**

Application > LP+ Setup > Text Position	
Specifies where the text will be positioned in the line space.	
Top of Line	Text is positioned at the top of the line space.
Bottom of Line	Text is positioned as if it were at the bottom of a line space at 6 LPI. The following example picture below shows both Top of Line and Bottom of Line positions.
Factory Default	Bottom of Line
IMPORTANT	**This option does not apply to OCR-A or OCR-B.**

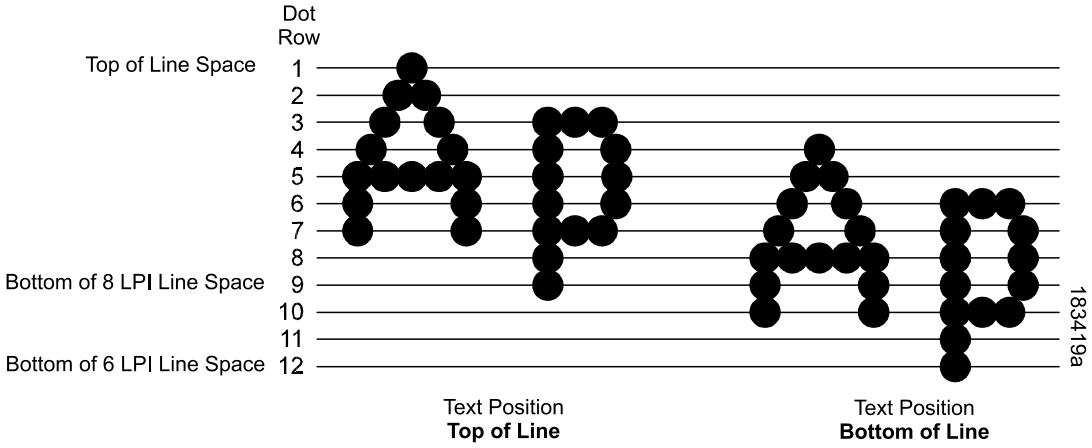

Application > LP+ Setup > Form Length (xx)	
Specifies form length in three different units for all preferences of the user: inches, millimeters, and even lines.	
Minimum	0.1 inches
Maximum	99.0 inches
Factory Default	T6x04: 6.0 inches T6x06: 4.0 inches
IMPORTANT	**Only lines are available when TN5250 is enabled.**

Application > LP+ Setup > Form Width (xx)	
Specifies form width in three different units for all preferences of the user: inches, millimeters, and even characters.	
Minimum	0.1 inches
Maximum	T6x04: 4.1 inches T6x06: 6.6 inches
Factory Default	The maximum printing width based on model.
IMPORTANT	**Only characters are available when the TN5250 is enabled.**
WARNING	**The width should not exceed the actual paper width to prevent damage to the platen.**

Application > LP+ Setup > Left Margin	
Set in characters. Character zero is defined as the far left edge of the page, and column numbering increments from left to right.	
Minimum	0 characters
Maximum	369 characters
Factory Default	0 characters
IMPORTANT	**This menu is hidden when TN5250 is enabled.**

Application > LP+ Setup > Right Margin	
Set in characters. Character zero is defined as the far right edge of the page, and column numbering increments from right to left.	
Minimum	0 characters
Maximum	369 characters
Factory Default	0 characters
IMPORTANT	**This menu is hidden when TN5250 is enabled.**

Application > LP+ Setup > Top Margin	
Defined in linespaces, starting from line zero at the top of the page and incrementing from the top down.	
Minimum	0 linespaces
Maximum	451 linespaces
Factory Default	0 linespaces

Application > LP+ Setup > Bottom Margin	
Defined in linespaces, starting from line zero at the bottom of the page and incrementing from the bottom up.	
Minimum	0 linespaces
Maximum	451 linespaces
Factory Default	0 linespaces

Application > LP+ Setup > Print Char. Set
Selecting this executable menu by pressing the ↵ ENTER key causes the printer to print the currently selected character set.

Application > LP+ Setup > Reset Cmd CFG Ld	
When the printer receives a host data stream reset command (ESC @ or ESC[K) in addition to resetting printer variables, the selected configuration is loaded.	
Disable	The active emulation parameters are loaded when the reset command is executed.
Power up Config	The power-up configuration is loaded when the reset command is executed.
Current config	The currently selected configuration is loaded when the reset command is executed.
Factory config	The factory installed configuration is loaded when the reset command is executed.
Factory Default	Disable

Application > P-SERIES Setup

IMPORTANT **The P-SERIES Setup submenu will only be present when the LP+ Emulation menu is set to P-SERIES. Otherwise, this menu will be replaced with the LP+ Emulation menu.**

Application > P-Series Setup > Character Group
This option selects the Character Set Group. Based on the group selected, then the character set can be chosen with the menu following *XXX Sets*. The group Standard Sets is shown below because it is unique to P-Series. All other groups are similar and described in *LP+, PGL, VGL Character Sets.*

Application > P-Series Setup > Character Set	
This option will show when menu Character Group is set to Standard Sets. Note that depending on which value is chosen, other menu(s) can be unhidden. For example, when *IBM PC* is selected, a menu *Primary Subset* and *Extended Subset* is available as shown in this table.	
IBM PC	When selected, *Primary Subset* and *Extended Subset* menus will be unhidden.
Multinational	When selected, the *Multinational* menu will be unhidden.
ECMA Latin 1	When selected, *Primary Subset* and *Extended Subset* menus will be unhidden.
DEC Mult	When selected, the *DEC Mult.* menu will be unhidden.
CP 858 EURO	No other menus will be unhidden.
Factory Default	IBM PC
IMPORTANT	**Upon different choices, menus may be unhidden as described.**

Application > P-Series Setup > Primary Subset Application > P-Series Setup > Multinational Application > P-Series Setup > DEC Mult.	
One of these menus may be available when the *Character Group* is *Standard Sets*. The menu **bolded** in the right column below is unhidden and will have options with defaults marked (*). If the *Character Set* option is not shown in the left column, none of these menus is available.	
Character Set = IBM PC	**Primary Subset** ASCII (USA) *, French, German, English, Danish, Swedish, Italian, Spanish, Japanese, French Canadian, Latin American, Norwegian, Danish II, Spanish II, Latin Am II
Character Set = Multinational	**Multinational** ASCII (USA) *, EBCDIC
Character Set = ECMA Latin 1	**Primary Subset** ASCII (USA) *, German, Swedish, Danish, Norwegian, Finnish, English, Dutch, French, Spanish, Italian, Turkish, Japanese
Character Set = DEC Mult	**DEC Mult.** ASCII (USA) *, French, German, English, Norw./Danish, Swedish, Italian, Spanish, Japanese, French Canadian, Dutch, Finnish, Swiss
Factory Default	As shown with asterisk (*).

Application > P-Series Setup > Extended Subset	
One of these menus will be available when the *Character Group* is *Standard Sets*. The menu at the right column is unhidden and will have options as shown with defaults marked (*).If the Character Set option is not shown in the left column, no menu is unhidden.	
Character Set = IBM PC	**Extended Subset** Code Page 437 *, Code Page 850
Character Set = ECMA Latin 1	**Extended Subset** Multinational *, Barcode 10 cpi, Mult. DP 10 cpi, Mult. DP 12 cpi, Mult. LQ 10 cpi, Greek DP 10 cpi, Greek DP 12 cpi, Greek LQ 10 cpi, Grap. DP 10 cpi, Grap. LQ 10 cpi, Sci. DP 10 cpi, Sci. DP 12 cpi, Sci. LQ 10 cpi
Factory Default	As shown with asterisk (*).

Application > P-Series Setup > Horizontal DPI	
This feature enables the thermal printer to print images as close as possible to the same size as those originally programmed for a line matrix or laser printer by selecting a horizontal resolution that matches that of the printer that the file was originally generated for. Some printers are capable of printing higher or lower dpi, depending on the print head installed.	
Minimum	60
Maximum	400
Factory Default	120

Application > P-Series Setup > Vertical DPI	
This feature enables the thermal printer to print images as close as possible to the same size as those originally programmed for a line matrix or laser printer by selecting a vertical resolution that matches that of the printer that the file was originally generated for. Some printers are capable of printing higher or lower dpi, depending on the print head installed.	
Minimum	72
Maximum	400
Factory Default	72

Application > P-Series Setup > Define CR code	
This option controls the action of the printer when it receives a Carriage Return code (0D hex) from the host computer. If this feature is enabled, each time the printer receives a carriage return, it inserts an additional Line Feed code (0A hex) into the data stream. Do not use this feature if the host computer sends line feeds to the printer.	
CR = CR	Does not insert an extra line feed after each carriage return.
CR = CR + LF	Inserts an extra line feed after each carriage return. The next print position will be print position 1 of the next line.
Factory Default	CR = CR

Application > P-Series Setup > Auto LF	
This option defines the printer action when print data is received past the forms width setting.	
Disable	Discards any data past the forms width.
Enable	Performs an automatic carriage return and line feed when data is received past the forms width.
Factory Default	Disable

Application > P-Series Setup > Define LF Code	
This option controls the action of the printer when it receives a Line Feed code (0A hex) from the host computer. If this feature is enabled, each time the printer receives a line feed, it inserts an additional carriage return code (0D hex) into the data stream. Do not use this feature if the host computer sends carriage returns to the printer.	
LF = LF	Does not insert a carriage return before each line feed. The next print position will be the current print position of the next line.
LF = CR + LF	Inserts an extra carriage return before each line feed. The next print position will be print position 1 of the next line.
Factory Default	LF = CR + LF

Application > P-Series Setup > Control Code 06	
Control Code 06 defines the function of ASCII code 06 hex (ACK). You can select an alternate line spacing of 6.0, 8.0, or 10.3 LPI.	
Selections	6.0, 8.0, or 10.3 LPI
Factory Default	8.0 LPI

Application > P-Series Setup > Control Code 08	
Control Code 08 defines the function of ASCII code 08 hex (BS). You can define the code to output an Elongated character or a Backspace.	
Elongated	Output and Elongated character
Backspace	Output and Backspace character
Factory Default	Elongated

Application > P-Series Setup > Overstrike	
Overstrike determines the action required when a line is printed over a previous line because a carriage return was received without a line feed.	
Disable	Replaces the characters from the first line with the second line.
Enable	Prints the second line on top of the first line making it bolder.
Factory Default	Enable

Application > P-Series Setup > Select SFCC	
This P-Series feature allows you to select an ASCII code which defines the Special Function Control Code (SFCC) command code value. The factory default value is hex 01, but the P-Series options allow selection of any value ranging from hex 00 through hex 7F. This powerful feature permits the SFCC code to be assigned a value compatible with the application environment where the P-Series jobs originate. The most commonly used values include the following: SOH (01 hex), ESC (1B hex), ETX (03 hex), ^ (5E hex), and ~ (7E hex).	
Minimum	00 hex
Maximum	7F hex
Factory Default	01 hex
IMPORTANT	**Non-Printable ASCII code values range from hex 00 through hex 1F and also include hex 7F. Printable ASCII code values range from hex 20 through hex 7E. If a printable code value is chosen to define the SFCC code value, you must ensure that the printer data stream will not contain the same code value in printable text. Otherwise text containing the character for the SFCC control code value may be incorrectly processed as an SFCC command causing print errors.**

Application > P-Series Setup > EVFU Select	
Controls how the printer handles vertical formatting.	
Disable	Disables all EVFU processing.
Enable	Selects P-Series compatible Electronic Vertical Format Unit (EVFU).
Factory Default	Enable

Application > P-Series Setup > Alt. Set 80-9F	
Determines how data in the range 80 hex – 9F hex will be treated.	
Control Code	Interprets as a control code.
Printable	Prints data in this range.
Factory Default	Control Code.

Application > P-Series Setup > SFCC d command	
This menu option is for backward compatibility.	
Even dot plot	This option interprets the SFCC d command as even dot plot.
Double High	This option interprets the SFCC d command as double high. Select this option for backward compatibility.
Factory Default	Even dot plot

Application > P-Series Setup > PSeries Dbl High	
This menu option allows printing compatibility between the current and older models of Printronix printers.	
Normal	This is normal Double High printing for current model printers.
P3/4/6/9 Compat.	Where older printers printed two dot rows higher, this option allows for compatibility by raising the print two dot rows to match the current models dot row value (two dot rows lower).
Factory Default	Normal

Application > P-Series Setup > FF valid at TOF	
The FF valid at TOF option determines whether the printer will perform a Form Feed when the host sends a Form Feed command, if the printer is at the top of form.	
Disable	Will not perform a form feed when the host sends a Form Feed and the printer is at the top of form.
Enable	Performs a form feed when the host sends a Form Feed and the printer is at the top of form.
Factory Default	Enable

Application > P-SERIES XQ Setup

IMPORTANT **The P-SERIES XQ Setup submenu will only be present when the LP+ Emulation menu is set to P-SERIES XQ. Otherwise, this menu will be replaced with the LP+ Emulation menu.**

IMPORTANT **This LP+ emulation does not have any specific Character Group or Character Set selection.**

Application > P-Series XQ Setup > Horizontal DPI	
This feature enables the thermal printer to print images as close as possible to the same size as those originally programmed for a line matrix or laser printer by selecting a horizontal resolution that matches that of the printer that the file was originally generated for. Some printers are capable of printing higher or lower dpi, depending on the print head installed.	
Minimum	60
Maximum	400
Factory Default	120

Application > P-Series XQ Setup > Vertical DPI	
This feature enables the thermal printer to print images as close as possible to the same size as those originally programmed for a line matrix or laser printer by selecting a vertical resolution that matches that of the printer that the file was originally generated for. Some printers are capable of printing higher or lower dpi, depending on the print head installed.	
Minimum	72
Maximum	400
Factory Default	72

Application > P-Series XQ Setup > Define CR code	
This option controls the action of the printer when it receives a Carriage Return code (0D hex) from the host computer. If this feature is enabled, each time the printer receives a carriage return, it inserts an additional Line Feed code (0A hex) into the data stream. Do not use this feature if the host computer sends line feeds to the printer.	
CR = CR	Does not insert an extra line feed after each carriage return.
CR = CR + LF	Inserts an extra line feed after each carriage return. The next print position will be print position 1 of the next line.
Factory Default	CR = CR

Application > P-Series XQ Setup > Auto LF	
This option defines the printer action when print data is received past the forms width setting.	
Disable	Discards any data past the forms width.
Enable	Performs an automatic carriage return and line feed when data is received past the forms width.
Factory Default	Disable

Application > P-Series XQ Setup > Define LF Code	
This option controls the action of the printer when it receives a Line Feed code (0A hex) from the host computer. If this feature is enabled, each time the printer receives a line feed, it inserts an additional carriage return code (0D hex) into the data stream. Do not use this feature if the host computer sends carriage returns to the printer.	
LF = LF	Does not insert a carriage return before each line feed. The next print position will be the current print position of the next line.
LF = CR + LF	Inserts an extra carriage return before each line feed. The next print position will be print position 1 of the next line.
Factory Default	LF = CR + LF

Application > P-Series XQ Setup > Control Code 06	
Control Code 06 defines the function of ASCII code 06 hex (ACK). You can select an alternate line spacing of 6.0, 8.0, or 10.3 LPI.	
Selections	6.0, 8.0, or 10.3 LPI
Factory Default	8.0 LPI

Application > P-Series XQ Setup > Compressed Print	
Controls which host command enables compressed printing.	
Char 01 SOH	
Char 03 ETX	
Char 09 HT	
Factory Default	Char 01 SOH

Application > P-Series XQ Setup > Elong/Alt. Font	
Controls which host command sets elongated (double high) fonts and extended character set.	
ELNG=BS FONT=SO	Elongated set by BS (08 hex), extended character set set by SO (0E hex).
ELNG=SO FONT=BS	Elongated set by SO (0E hex), extended character set set by BS (08 hex).
Factory Default	Elng=BS FONT=SO

Application > P-Series XQ Setup > Gothic Typeface	
Controls which host command sets Gothic printing.	
Char 02 STX	
Char 03 ETX	
Char 09 HT	
Factory Default	Char 02 STX

Application > P-Series XQ Setup > EVFU Select	
Controls how the printer handles vertical formatting.	
Disable	Disables all EVFU processing.
Enable	Selects P-Series compatible Electronic Vertical Format Unit (EVFU).
Factory Default	Enable

Application > P-Series XQ Setup > Upr. Case Select	
Controls how the printer handles lowercase characters it receives from the host computer. When enabled, all characters are printed in uppercase.	
Disable	Prints lowercase characters received from the host computer as lowercase; prints uppercase characters received from the computer as uppercase.
Enable	Prints lowercase characters received from the host computer as their corresponding uppercase equivalents; prints uppercase characters received from the computer as uppercase.
Factory Default	Disable

Application > P-Series XQ Setup > Slew Relative	
“Slewing” is rapid vertical paper movement. This parameter determines the number of lines slewed (either 1-15 lines or 1-16 lines) when an EVFU Slew Relative command is received.	
1-15 lines	
1-16 lines	
Factory Default	1-15 lines

Application > Serial Matrix Setup

IMPORTANT **The Serial Matrix Setup submenu will only be present when the LP+ Emulation menu is set to Serial Matrix. Otherwise, this menu will be replaced with the LP+ Emulation menu.**

Application > Serial Matrix Setup > Character Group
This option selects the Character Set Group. Based on the group selected, then the character set can be chosen with the menu following *XXX Sets*. The group Standard Sets is shown below because it is unique to Serial Matrix. All other groups are similar and described in *LP+, PGL, VGL Character Sets.*

Application > Serial Matrix Setup > Character Set	
This option will show when menu Character Group is set to Standard Sets. Note that depending on which value is chosen, other menu(s) can be unhidden. For example, when *IBM PC* is selected, a menu *Primary Subset* and *Extended Subset* is available as shown in this table.	
IBM PC	When selected, *Primary Subset* and *Extended Subset* menus will be unhidden.
Multinational	When selected, the *Multinational* menu will be unhidden.
ECMA Latin 1	When selected, *Primary Subset* and *Extended Subset* menus will be unhidden.
DEC Mult	When selected, the *DEC Mult.* menu will be unhidden.
CP 858 EURO	No other menus will be unhidden.
Factory Default	IBM PC
IMPORTANT	**Upon different choices, menus may be unhidden as described.**

Application > Serial Matrix Setup > Primary Subset Application > Serial Matrix Setup > Multinational Application > Serial Matrix Setup > DEC Mult.	
One of these menus may be available when the *Character Group* is *Standard Sets*. The menu **bolded** in the right column below is unhidden and will have options with defaults marked (*). If the *Character Set* option is not shown in the left column, none of these menus is available.	
Character Set = IBM PC	**Primary Subset** ASCII (USA) *, French, German, English, Danish, Swedish, Italian, Spanish, Japanese, French Canadian, Latin American, Norwegian, Danish II, Spanish II, Latin Am II
Character Set = Multinational	**Multinational** ASCII (USA) *, EBCDIC
Character Set = ECMA Latin 1	**Primary Subset** ASCII (USA) *, German, Swedish, Danish, Norwegian, Finnish, English, Dutch, French, Spanish, Italian, Turkish, Japanese
Character Set = DEC Mult	**DEC Mult.** ASCII (USA) *, French, German, English, Norw./Danish, Swedish, Italian, Spanish, Japanese, French Canadian, Dutch, Finnish, Swiss
Factory Default	As shown with asterisk (*).

Application > Serial Matrix Setup > Extended Subset	
One of these menus will be available when the *Character Group* is *Standard Sets*. The menu at the right column is unhidden and will have options as shown with defaults marked (*).If the Character Set option is not shown in the left column, no menu is unhidden.	
Character Set = IBM PC	**Extended Subset** Code Page 437 *, Code Page 850
Character Set = ECMA Latin 1	**Extended Subset** Multinational *, Barcode 10 cpi, Mult. DP 10 cpi, Mult. DP 12 cpi, Mult. LQ 10 cpi, Greek DP 10 cpi, Greek DP 12 cpi, Greek LQ 10 cpi, Grap. DP 10 cpi, Grap. LQ 10 cpi, Sci. DP 10 cpi, Sci. DP 12 cpi, Sci. LQ 10 cpi
Factory Default	As shown with asterisk (*).

Application > Serial Matrix Setup > Horizontal DPI	
This feature enables the thermal printer to print images as close as possible to the same size as those originally programmed for a line matrix or laser printer by selecting a horizontal resolution that matches that of the printer that the file was originally generated for. Some printers are capable of printing higher or lower dpi, depending on the print head installed.	
Minimum	60
Maximum	400
Factory Default	120

Application > Serial Matrix Setup > Vertical DPI	
This feature enables the thermal printer to print images as close as possible to the same size as those originally programmed for a line matrix or laser printer by selecting a vertical resolution that matches that of the printer that the file was originally generated for. Some printers are capable of printing higher or lower dpi, depending on the print head installed.	
Minimum	72
Maximum	400
Factory Default	72

Application > Serial Matrix Setup > Define CR code	
This option controls the action of the printer when it receives a Carriage Return code (0D hex) from the host computer. If this feature is enabled, each time the printer receives a carriage return, it inserts an additional Line Feed code (0A hex) into the data stream. Do not use this feature if the host computer sends line feeds to the printer.	
CR = CR	Does not insert an extra line feed after each carriage return.
CR = CR + LF	Inserts an extra line feed after each carriage return. The next print position will be print position 1 of the next line.
Factory Default	CR = CR

Application > Serial Matrix Setup > Auto LF	
This option defines the printer action when print data is received past the forms width setting.	
Disable	Discards any data past the forms width.
Enable	Performs an automatic carriage return and line feed when data is received past the forms width.
Factory Default	Enable

Application > Serial Matrix Setup > Define LF Code	
This option controls the action of the printer when it receives a Line Feed code (0A hex) from the host computer. If this feature is enabled, each time the printer receives a line feed, it inserts an additional carriage return code (0D hex) into the data stream. Do not use this feature if the host computer sends carriage returns to the printer.	
LF = LF	Does not insert a carriage return before each line feed. The next print position will be the current print position of the next line.
LF = CR + LF	Inserts an extra carriage return before each line feed. The next print position will be print position 1 of the next line.
Factory Default	LF = LF

Application > Serial Matrix Setup > Control Code 06	
Control Code 06 defines the function of ASCII code 06 hex (ACK). You can select an alternate line spacing of 6.0, 8.0, or 10.3 LPI.	
Selections	6.0, 8.0, or 10.3 LPI
Factory Default	8.0 LPI

Application > Serial Matrix Setup > Overstrike	
Overstrike determines the action required when a line is printed over a previous line because a carriage return was received without a line feed.	
Disable	Replaces the characters from the first line with the second line.
Enable	Prints the second line on top of the first line making it bolder.
Factory Default	Enable

Application > Serial Matrix Setup > Printer Select	
Determines if control codes DC1 and DC3 will ignored or used to disable or enable the printer, respectively.	
Disable	Ignores the ASCII DC1 and DC3 control codes.
Enable	Disables the printer when control code DC1 is received and enables the printer when DC3 is received.
Factory Default	Disable

Application > Serial Matrix Setup > Alt. Set 80-9F	
Determines how data in the range 80 hex – 9F hex will be treated.	
Control Code	Interprets as a control code.
Printable	Prints data in this range.
Factory Default	Control Code.

Application > Serial Matrix Setup > ESC d Command	
This item is for backward compatibility.	
Even dot plot	This option interprets the ESC d command as even dot plot.
Double high	This option interprets the ESC d command as double high. Select this option for backward compatibility.
Factory Default	Even dot plot.

Application > Proprinter Setup

IMPORTANT **The Proprinter Setup submenu will only be present when the LP+ Emulation menu is set to Proprinter XL. Otherwise, this menu will be replaced with the LP+ Emulation menu.**

Application > Proprinter Setup > Character Group
This option selects the Character Set Group. Based on the group selected, then the character set can be chosen with the menu following *XXX Sets*. The group Standard Sets is shown below because it is unique to Proprinter. All other groups are similar and described in *LP+, PGL, VGL Character Sets*

Application > Proprinter Setup > Character Set	
This option will show when menu Character Group is set to Standard Sets.	
Code Page 437 *	Code Page 437 set
Code Page 850	Code Page 850 set
OCR-A	OCR-A set
OCR-B	OCR-B set
Multinational	ASCII (USA) * EBCDIC
CP 858 EURO	CP 858 EURO
Factory Default	Those above with asterisk *

Application > Proprinter Setup > Horizontal DPI	
This feature enables the thermal printer to print images as close as possible to the same size as those originally programmed for a line matrix or laser printer by selecting a horizontal resolution that matches that of the printer that the file was originally generated for. Some printers are capable of printing higher or lower dpi, depending on the print head installed.	
Minimum	60
Maximum	400
Factory Default	120

Application > Proprinter Setup > Vertical DPI	
This feature enables the thermal printer to print images as close as possible to the same size as those originally programmed for a line matrix or laser printer by selecting a vertical resolution that matches that of the printer that the file was originally generated for. Some printers are capable of printing higher or lower dpi, depending on the print head installed.	
Minimum	72
Maximum	400
Factory Default	72

Application > Proprinter Setup > Define CR code	
This option controls the action of the printer when it receives a Carriage Return code (0D hex) from the host computer. If this feature is enabled, each time the printer receives a carriage return, it inserts an additional Line Feed code (0A hex) into the data stream. Do not use this feature if the host computer sends line feeds to the printer.	
CR = CR	Does not insert an extra line feed after each carriage return.
CR = CR + LF	Inserts an extra line feed after each carriage return. The next print position will be print position 1 of the next line.
Factory Default	CR = CR

Application > Proprinter Setup > Auto LF	
This option defines the printer action when print data is received past the forms width setting.	
Disable	Discards any data past the forms width.
Enable	Performs an automatic carriage return and line feed when data is received past the forms width.
Factory Default	Enable

Application > Proprinter Setup > Define LF Code	
This option controls the action of the printer when it receives a Line Feed code (0A hex) from the host computer. If this feature is enabled, each time the printer receives a line feed, it inserts an additional carriage return code (0D hex) into the data stream. Do not use this feature if the host computer sends carriage returns to the printer.	
LF = LF	Does not insert a carriage return before each line feed. The next print position will be the current print position of the next line.
LF = CR + LF	Inserts an extra carriage return before each line feed. The next print position will be print position 1 of the next line.
Factory Default	LF = LF

Application > Proprinter Setup > 20 CPI Condensed	
Compressed print characters are narrower than the normal character set. This is helpful for applications where you need to print the maximum amount of information on a page.	
Disable	Does not compress print widths, even if condensed print is chosen by the host.
Enable	Prints about 60% of the width of normal characters when compressed print is chosen by the host computer.
Factory Default	Enable

Application > Proprinter Setup > FF valid at TOF	
The FF valid at TOF option determines whether the printer will perform a Form Feed when the host sends a Form Feed command, if the printer is at the top of form.	
Disable	Will not perform a form feed when the host sends a Form Feed and the printer is at the top of form.
Enable	Performs a form feed when the host sends a Form Feed and the printer is at the top of form.
Factory Default	Enable

Application > Proprinter Setup > Alt. Char Set	
Determines how control codes hex 80-9F are handled.	
Set 1	Interprets data in the range of hex 80 through hex 9F as a control code.
Set 2	Prints data in the range of hex 80 through hex 9F.
Factory Default	Set 1

Application > Epson FX Setup

IMPORTANT **The Epson FX Setup submenu will only be present when the LP+ Emulation menu is set to Epson FX. Otherwise, this menu will be replaced with the LP+ Emulation menu.**

Application > Epson FX Setup > Character Group
This option selects the Character Set Group. Based on the group selected, then the character set can be chosen with the menu following *XXX Sets*. The group Standard Sets is shown below because it is unique to Epson FX. All other groups are similar and described in *LP+, PGL, VGL Character Sets.*

Application > Epson FX Setup > Character Set	
This option will show when menu Character Group is set to Standard Sets. Note that depending on which value is chosen, other menu(s) can be unhidden. For example, when *Epson Set* is selected, a menu *Epson Set* is available.	
Epson Set	When selected, the *Epson Set menu* will be unhidden.
OCR-A	OCR-A selected.
OCR-B	OCR-B selected.
Multinational	When selected, the *Multinational* menu will be unhidden.
Code Page 850	Code Page 850. No other menus will be unhidden.
CP 858 EURO	CP 858 EURO. No other menus will be unhidden.
IBM PC	IBM PC set. No other menus will be unhidden.
Factory Default	Epson Set
IMPORTANT	**Upon different choices, menus may be unhidden as described.**

Application > Epson FX Setup > Epson Set Application > Epson FX Setup > Multinational	
One of these menus may be available when the *Character Group* is *Standard Sets*. The menu **bolded** in the right column below is unhidden and will have options with defaults marked (*). If the *Character Set* option is not shown in the left column, none of these menus is available.	
Character Set = Epson Set	**Epson Set** ASCII (USA) *, French, German, English, Danish I, Swedish, Italian, Spanish I, Japanese, Norwegian, Danish II, Latin Am II, French Canadian, Latin Am I
Character Set = Multinational	**Multinational** ASCII (USA) *, EBCDIC
Factory Default	As shown with asterisk (*).

Application > Epson FX Setup > Horizontal DPI	
This feature enables the thermal printer to print images as close as possible to the same size as those originally programmed for a line matrix or laser printer by selecting a horizontal resolution that matches that of the printer that the file was originally generated for. Some printers are capable of printing higher or lower dpi, depending on the print head installed.	
Minimum	60
Maximum	400
Factory Default	120

Application > Epson FX Setup > Vertical DPI	
This feature enables the thermal printer to print images as close as possible to the same size as those originally programmed for a line matrix or laser printer by selecting a vertical resolution that matches that of the printer that the file was originally generated for. Some printers are capable of printing higher or lower dpi, depending on the print head installed.	
Minimum	72
Maximum	400
Factory Default	72

Application > Epson FX Setup > Define CR code	
This option controls the action of the printer when it receives a Carriage Return code (0D hex) from the host computer. If this feature is enabled, each time the printer receives a carriage return, it inserts an additional Line Feed code (0A hex) into the data stream. Do not use this feature if the host computer sends line feeds to the printer.	
CR = CR	Does not insert an extra line feed after each carriage return.
CR = CR + LF	Inserts an extra line feed after each carriage return. The next print position will be print position 1 of the next line.
Factory Default	CR = CR

Application > Epson FX Setup > Auto LF	
This option defines the printer action when print data is received past the forms width setting.	
Disable	Discards any data past the forms width.
Enable	Performs an automatic carriage return and line feed when data is received past the forms width.
Factory Default	Enable

Application > Epson FX Setup > Define LF Code	
This option controls the action of the printer when it receives a Line Feed code (0A hex) from the host computer. If this feature is enabled, each time the printer receives a line feed, it inserts an additional carriage return code (0D hex) into the data stream. Do not use this feature if the host computer sends carriage returns to the printer.	
LF = LF	Does not insert a carriage return before each line feed. The next print position will be the current print position of the next line.
LF = CR + LF	Inserts an extra carriage return before each line feed. The next print position will be print position 1 of the next line.
Factory Default	LF = LF

Application > Epson FX Setup > Printer Select	
Determines if control codes DC1 and DC3 will ignored or used to disable or enable the printer, respectively.	
Disable	Ignores the ASCII DC1 and DC3 control codes.
Enable	Disables the printer when control code DC1 is received and enables the printer when DC3 is received.
Factory Default	Disable

Application > Epson FX Setup > 20 CPI Condensed	
Compressed print characters are narrower than the normal character set. This is helpful for applications where you need to print the maximum amount of information on a page.	
Disable	Does not compress print widths, even if condensed print is chosen by the host.
Enable	Prints about 60% of the width of normal characters when compressed print is chosen by the host computer.
Factory Default	Enable

Application > Epson FX Setup > Alt. Set 80-9F	
Determines how data in the range 80 hex – 9F hex will be treated.	
Control Code	Interprets as a control code.
Printable	Prints data in this range.
Factory Default	Control Code.

Application > Fonts

IMPORTANT **This option is not available when System > Control > Program Select is set to PS/PDF.**

Application > Fonts > Standard Chars.	
This menu entry permits you to adjust the thickness or font weight of standard text fonts.	
Minimum	0
Maximum	512
Factory Default	340

Application > Fonts > Bold Chars.	
This menu entry permits you to adjust the thickness or font weight of bold text fonts.	
Minimum	0
Maximum	512
Factory Default	448

Application > Fonts > Extra Bold Chars	
This menu entry permits you to adjust the thickness or font weight of extra bold text fonts.	
Minimum	0
Maximum	512
Factory Default	504

Application > Fonts > OCR-A Chars.	
Character weight adjustment of resident OCR-A characters.	
Minimum	0
Maximum	512
Factory Default	384

Application > Fonts > OCR-B Chars.	
Character weight adjustment of resident OCR-B characters.	
Minimum	0
Maximum	512
Factory Default	304

Application > Fonts > TT Reg Chars.	
This menu entry permits you to adjust the thickness or font weight of standard TrueType fonts.	
Minimum	0
Maximum	512
Factory Default	382

Application > Fonts > TT Bold Chars.	
This menu entry permits you to adjust the thickness or font weight of bold TrueType fonts.	
Minimum	0
Maximum	512
Factory Default	448

Application > Fonts > Tall Characters	
Increases the point height of resident Intellifont characters.	
Disable	Standard resident font character point height is maintained.
Enable	Increases the point height of resident Intellifont characters approximately 10%.
Factory Default	Disable

Host IO

Host IO > Control

Host IO > Control > Interface	
This option allows you to send print jobs through any interface with auto-switching selected as host interface. It also allows a particular interface from the menu to be selected.	
Auto Switching	Automatically switches interface when host data is sent to that interface (and any job in progress is completed).
Centronics	Centronics Interface
Serial	Serial RS-232
IEEE 1284	IEEE-1284 Interface
Ethernet	Ethernet Interface
USB	USB Interface
Factory Default	Auto Switching
IMPORTANT	**The options "Centronics" and "IEEE-1284" will not be available unless the parallel port option card is installed.**

Host IO > Centronics > Parallel Choice	
This option determines how data bit 8 is treated from the host.	
Centronics	Centronics Interface
IEEE 1284	IEEE-1284 Interface
Factory Default	IEEE 1284
IMPORTANT	**This menu will not be present unless the parallel option card is installed.**

Host IO > Centronics

IMPORTANT **This submenu will not be available unless the parallel option card is installed.**

Host IO > Centronics > Buffer (Kbytes)	
This option configures the amount of memory allocated for the Ethernet buffer incremented in 1 Kbyte increments.	
Minimum	1
Maximum	16, 32, or 64
Factory Default	16 Kbytes

Host IO > Centronics > Prime Signal	
This option determines how the printer will operate if the host asserts a prime signal.	
Disable	The printer will not reboot if the host asserts the Prime Signal.
Enable	The printer will reboot if the host asserts the Prime Signal.
Factory Default	Disable

Host IO > Centronics > TOF Action	
This option determines if TOF is sought after a reboot of the printer due to the host asserting a prime signal.	
Reset	A form feed is performed before a warm start when the prime signal is asserted from the host. This setting is used only if the prime signal parameter is enabled.
Do Nothing	Nothing occurs before a warm start when the prime signal is asserted from the host.
Factory Default	Reset

Host IO > Centronics > Data Bit 8	
This option determines how data bit 8 is treated from the host.	
Disable	When the host PI line is enabled, data bit 8 internally indicates PI line status. To use the PI line, disable data bit 8, and enable the Host PI configuration option (under the PI Ignored option).
Enable	The PI line is not passed directly from host to printer; all 8 bits are used for data bits, and characters in the hex 80-FF range can be accessed.
Factory Default	Enable
IMPORTANT	**Data bit 8 is interpreted as either data bit 8 or PI signal, but never both. When enabled as data bit 8, data bit 8 has priority over the PI signal, and all data above hex 7F is used to access character data and not to interpret PI line data.** **Conversely, when data bit 8 is disabled and the PI signal is used, data bit 8 of the data is reserved for use as the PI function, and you cannot access characters in the hex 80-FF range. Therefore, to access characters in the hex 80-FF range, data bit 8 must be enabled.**

Host IO > Centronics > Data Polarity	
The Data Polarity parameter must be set to match the data polarity of your host computer.	
Standard	Does not expect the host computer to invert the data.
Inverted	Expects the data received on the data lines from the host computer to be inverted. Ones become zeros and vice versa.
Factory Default	Standard

Host IO > Centronics > Resp. Polarity	
The Response Polarity parameter must be set to match the response polarity of your host computer.	
Standard	Does not invert the response signal.
Inverted	Inverts the response signal sent to the host computer.
Factory Default	Standard

Host IO > Centronics > Busy on Strobe	
Determines when the Busy signal is asserted.	
Disable	Asserts a busy signal only when the print buffers are full.
Enable	Asserts a busy signal after each character is received.
Factory Default	Enable

Host IO > Centronics > Latch Data On	
Specifies whether the data is read on the leading or trailing edge of the data strobe signal.	
Leading	Leading Edge
Trailing	Trailing Edge
Factory Default	Leading

Host IO > Centronics > Offline Process	
Specifies how data is handled when the printer is OFFLINE.	
Disable	When set to disable, the printer does not process data from the Centronics port while OFFLINE.
Enable	When set to enable, the printer continues to process (but not print) the current job from the Centronics port while the printer is OFFLINE until the printer's buffer is full.
Factory Default	Disable

Host IO > Centronics > Report Status	
When a fault condition occurs in the printer, normally only the active port reports the fault to the host. With this menu item enabled, this port will report any fault even when it is not the current, active port. This submenu is only available when *Host IO* > *Control* > *Interface* is set to Auto Switching.	
Disable	Will not report the fault unless the active host.
Enable	Will report the fault even if not the active host.
Factory Default	Disable

Host IO > Centronics > Auto Trickle	
This feature is used to prevent a host computer from “timing out” because the parallel interface is “busy” for too long. This submenu is only available when *Host IO* > *Control* > *Interface* is set to Auto Switching.	
Disable	The Auto Trickle feature is not used.
Enable	When the printer’s buffers are almost full, the printer begins to trickle data in from the host (at the rate set in the Trickle Time menu) until the buffers start to empty out.
Factory Default	Disable

Host IO > Centronics > Trickle Time	
When the printer is printing data from a host and a second print job is received by the printer from a different host, Trickle Time prevents the second host from timing out while it is waiting for its data to be printed. In order to support this feature, the port has to be able to accept data from the host and store it for future use. For example, if the printer is printing a job from the serial port, and then receives a second print job from the parallel port, the data from the parallel port will “trickle” bit by bit into the printer buffer to prevent a timeout error from being sent back to the host connected to the parallel port. The selected value is the time that the printer waits before getting the next byte of data from the host. The Trickle Time value should be less than the host time out value, but not too much shorter or else the printer fills up its buffer too fast. This submenu is only available when *Host IO* > *Control* > *Interface* is set to Auto Switching.	
Options	¼, ½, 1, 2, 4, 8, and 16 seconds
Off	Disable trickling of data.
Factory Default	¼ second

Host IO > Centronics > AutoSW Timeout	
This is the timeout value used for the current port to then check the other selected port types for data to print. When the printer has not received data from the host after a certain period of time, it needs to time out in order to service the other ports. This submenu is only available when *Host IO > Control > Interface* is set to Auto Switching.	
Minimum	10 second
Maximum	60 seconds
Factory Default	10 seconds

Host IO > IEEE-1284

IMPORTANT **This submenu will not be available unless the parallel option card is installed.**

Host IO > IEEE-1284 > Buffer (Kbytes)
Same as *Host IO > Centronics > Buffer* (Kbytes).

Host IO > IEEE-1284 > Prime Signal
Same as *Host IO > Centronics > Prime Signal*.

Host IO > IEEE-1284 > TOF Action
Same as *Host IO > Centronics > TOF Action*.

Host IO > IEEE-1284 > Offline Process
Same as *Host IO > Centronics > Offline Process*.

Host IO > IEEE-1284 > Report Status
Same as *Host IO > Centronics > Report Status*.

Host IO > IEEE-1284 > Auto Trickle
Same as *Host IO > Centronics > Auto Trickle*.

Host IO > IEEE-1284 > Trickle Time
Same as *Host IO* > *Centronics* > *Trickle Time*
Host IO > IEEE-1284 > AutoSW Timeout
Same as *Host IO* > *Centronics* > *AutoSW Timeout*

Host IO > USB

Host IO > USB > Buffer (Kbytes)
Same as *Host IO* > *Centronics* > *Buffer* (Kbytes).

Host IO > USB > AutoSW Timeout
Same as *Host IO* > *Centronics* > *AutoSW Timeout*

Host IO > USB > USB Protocol	
While the USB protocol is a standard, some operating systems like the Linux BOSS 5.1 have some unique behaviors that require the printer to change its implementation.	
Standard	Standard USB Function
Boss 5.1	Support for the BOSS 5.1 Linux system.
Factory Default	Standard

Host IO > Serial

Host IO > Serial > Buffer (Kbytes)
Same as *Host IO* > *Centronics* > *Buffer* (Kbytes).

Host IO > Serial > Baud Rate	
Sets the baud rate of the serial interface in the printer. Baud rate is the speed at which serial data is transferred between the host computer and the printer.	
Selections	600, 1200, 2400, 4800, 9600, 19200, 38400, 57600, and 115200 baud.
Factory Default	9600 baud
IMPORTANT	**If you select a baud rate that is greater than 19200 and you experience data loss, you may need to lower the baud rate. You also may need to increase the Buffer (Kbyes) parameter to improve performance.**

Host IO > Serial > Word Length	
Sets the length of the serial data word. The length of the data word can be set to 7 or 8 bits and must match the corresponding data bits setting in the host computer.	
7	7 bit data word
8	8 bit data word
Factory Default	8

Host IO > Serial > Stop Bits	
Sets the number of stop bits in the serial data word. Either 1 or 2 stop bits can be selected. The setting must match the corresponding stop bit setting in the host computer.	
1	1 stop bit
2	2 stop bits
Factory Default	1

Host IO > Serial > Parity	
The options are Odd, Even, Mark, Sense, or None. The setting must match the corresponding parity setting in the host computer.	
Factory Default	None

Host IO > Serial > Data Protocol	
You can select one of the following serial interface protocols to meet the host interface requirements,	
XON / XOFF	The printer controls the flow of communication from the host by turning the transmission on and off. In some situations, such as when the buffer is full or the timing of signals is too slow or too fast, the printer will tell the host to stop transmission by sending an XOFF character. An XOFF character is sent when the number of empty bytes in the buffer is less than or equal to 25 percent of the buffer size. If the host keeps sending data after an XOFF is sent, the printer firmware will continue to send an XOFF for every 16 characters received. When cleared, the printer will resume receiving data (XON). The data does not have any End of Text codes; XON / XOFF is a non- block protocol
ETX / ACK	End of Text / Acknowledge. The host controls the flow of communication to the printer by sending a block of data and ending the block with an End of Text (ETX) signal. When the printer receives the ETX signal, it will acknowledge the ETX, thereby acknowledging it has received the entire block of data.
ACK / NAK	ACK means acknowledge; the device acknowledges it has accepted a transmission. NAK means negative acknowledge; the device did not receive the transmission

Host IO > Serial > Data Protocol	
You can select one of the following serial interface protocols to meet the host interface requirements,	
Series1 1 Char	The printer controls the flow of communication from the host by turning the transmission on and off using response characters sent to the host. If the number of valid bytes in the buffer reaches 75 percent of the buffer size, the ONLINE or OFFLINE and buffer full response character is sent. If the buffer is completely full, an ONLINE or OFFLINE buffer full response is sent every time a character is sent from the host. Whenever the printer state changes to ONLINE or OFFLINE, the appropriate response character is sent. If the idle response option is enabled, the printer will send a response character every two seconds while the number of valid bytes in the buffer is less than 75 percent of the buffer size. If a poll character is received (configurable from the Poll Character xx Hex option on the front panel from hex 0 through FF), the printer will send a response character n milliseconds later (configurable from the Poll Character xx MS on the front panel from 0 through 30). This n milliseconds is called the poll delay. The poll character will be removed from the input data stream and will not be processed. This may cause problems with the transmission of binary data (e.g., control codes, bit image, etc.). If a poll delay is started due to the receipt of a poll character and another poll character is received, the second poll character has no effect and is removed from the input data stream. If a transition (from buffer full to empty or ONLINE to OFFLINE) occurs during a poll delay, the new printer state will be sent at the end of the poll delay. See *Table 3*.
Series1 2 Char	This protocol behaves exactly the same as the Series 1 Char except there is a two-character response to the host. The response characters are described in *Table 3.*
ENQ / ACK	The host controls the flow of communication to the printer by sending a block of data and ending the block with an Enquiry (ENQ) character. When the printer receives the ENQ Character, it acknowledges the ENQ, thereby acknowledging it has received the entire block of data. Status will also be sent before the ACK. The status is as shown in *Table 4.*
DTR	The printer controls the data flow by sending this hardware signal to the host. If there is enough room in the printer buffer, the printer will send a high signal; if the buffer is full, the printer will send a low signal. DTR tells the host if it is safe to send more data. (If the host sends data during an unsafe condition, data will be lost.) DTR is not available when RS-422 is selected

Host IO > Serial > Data Protocol	
You can select one of the following serial interface protocols to meet the host interface requirements,	
Factory Default	XON / XOFF

Table 3. Response for Series1 Char

Printer State	Series1 1 Char Response	Series1 2 Char Response
ONLINE and Buffer Empty	CR	1 CR
ONLINE and Buffer Full	3	3 CR
OFFLINE and Buffer Empty	0	0 CR
OFFLINE and Buffer Full	2	2 CR

Table 4. Response for ENQ / ACK

Printer State	Status
ONLINE	40 06
ONLINE or Paper Motion Fault	43
Platen Open or Paper Out	47

Host IO > Serial > Data Term Ready	
Stands for Data Terminal Ready. This configuration is part of hardware flow control and determines when the Data Terminal Ready (DTR) signal is generated. This signal indicates if the printer is ready to receive data.	
True	Continuously asserts the DTR signal.
On-Line and BNF	Asserts the DTR signal when the printer is ONLINE and the internal serial buffer is not full (BNF).
Off-Line or BF	Asserts the DTR signal when the printer is OFFLINE or the internal serial buffer is full.
On-line	Asserts the DTR signal when the printer is ONLINE.
False	Never asserts the DTR signal.
Factory Default	True

Host IO > Serial > Poll Character	
This option is for the Series1 protocol. Whenever the printer receives this character, it sends a response to the host indicating the current state of the printer.	
Minimum	00 hex
Maximum	FF hex
Factory Default	00 hex

Host IO > Serial > Poll Response	
This option is for the Series1 protocol. After receiving a poll character, the printer will wait the poll response time in milliseconds before sending the response.	
Minimum	0 ms
Maximum	30 ms
Factory Default	0 ms

Host IO > Serial > Idle Response	
This option is for the Series1 protocol and is relevant when the buffer is less than 75% full.	
Disable	The printer does not send a response character when the buffer is less than 75% full..
Enable	The printer sends a response character every two seconds while the buffer is less than 75% full.
Factory Default	Disable

Host IO > Serial > One Char Enquiry

The One Char Enquiry mode uses the Poll Character to detect a request from the host and sends a response back to the host. This option also allows you to turn on and off this feature.

Printer State	Response (hex)
ONLINE and Buffer Not Full	22
ONLINE and Buffer Full	23
OFFLINE and Buffer Not Full	20
OFFLINE and Buffer Full	21

The Poll Character is removed from the data stream. If the Data Protocol is set to ETX/ACK, ACK/NAK, or Series1, One Char Enquiry is automatically disabled.

Disable	
Enable	
Factory Default	Disable

Host IO > Serial > Printer Status

With this feature, the printer will respond to an ENQ character by sending a status byte to the host. The type of status byte is determined by this menu. The selections allowed are ENQ/STX and ENQ.

Disable	Printer status is not returned to the host.
ENQ / STX	See *Table 5*
ENQ	See *Table 6*
Factory Default	Disable
IMPORTANT	**The ENQ is removed from the data stream.**

Table 5. ENQ/STX Status Byte

Bit	Printer Status
0	Set when the printer is not ONLINE or the buffer is full.
1	Set when the printer is OFFLINE.
2	Clear during a paper out fault.
3	Always set.
4	Set during a Head Open fault.
5	Set during a buffer overflow fault.
6	Set during a parity or framing error fault.
7	Always clear.

Table 6. ENQ Status Byte

Bit	Printer Status
0	Set when the label has printed.
1	Set when the label is presented.
2	Set while the printer is ONLINE.
3	Always set.
4	Set printing in the batch mode.
5	Set during a Ribbon fault.
6	Set during a Paper Out fault.
7	Set during a Head Open fault.

Host IO > Serial > Framing Errors	
These are possible errors that can occur when serial interface settings of the printer do not match those of the host computer. This menu determines whether this error is shown on the control panel.	
Disable	Feature disabled.
Enable	If a framing error occurs, a fault message will display on the control panel.
Factory Default	Enable

Host IO > Serial > Offline Process
Same as *Host IO > Centronics > Offline Process.*

Host IO > Serial > Report Status
Same as *Host IO > Centronics > Report Status.*

Host IO > Serial > Trickle Time
Same as *Host IO > Centronics > Trickle Time*

Host IO > Serial > AutoSW Timeout
Same as *Host IO > Centronics > AutoSW Timeout*

Host IO > Host USB

This menu section is only shown when the user plugs in a keyboard, scanner, or other product that uses a USB host interface to send data to the printer. This menu is not shown when a USB drive is plugged in.

Host IO > Host USB > AutoSW Timeout
Same as *Host IO > Centronics > AutoSW Timeout*

Host IO > Host USB > USB Host Data	
This menu determines how the data received through the Host USB port will be used by the printer.	
Panel	Typically a keyboard is plugged in and using different keys will allow going offline, online, and navigate the front panel.
Data	For a scale, scanner, or other item that sends data to the printer, this data will be treated as Host IO and can be used to produce labels.
Debug	Any data received by the USB host product will be sent out the Diagnostic port.
Factory Default	Data

Network

For detailed information about using the NIC, refer to the *Network Interface Card User's Manual*.

IMPORTANT **Network menus are saved in the separate section of memory. Loading factory configuration will NOT reset these items.**

Network > Control

Network > Control > ASCII Data Port	
This option allows you to set the port number for ASCII print jobs. The data port number needs to match your host system setting.	
Minimum	1025
Maximum	65535
Factory Default	9100

Network > Control > Keep Alive Timer	
This is the time that the Keep Alive Timer will run. Keep in mind that with the Keep Alive Timer on, the TCP connection will stay connected even after the print job has terminated if the host system does not close the connection.	
Minimum	0 minutes
Maximum	10 minutes
Factory Default	3 minutes

Network > Control > Job Control	
Determines how the end-of-job packet is handled (when the acknowledgement is sent back to the host system).	
Standard	The NIC waits for the entire job to be received before it indicates the job is done.
Enhanced	The NIC waits for the entire job to be printed before it indicates the job is done.
Fast Standard	The EOJ (End of Job) packet is acknowledged immediately. Use this option if the job is timed out due to a delay in the acknowledgement of the EOJ packet because of the amount of data being printed.
Off	There is no synchronization between the NIC and the printer when printing a job.
Factory Default	Standard

Network > Control > Offline Process	
Determines whether the network will process data while OFFLINE.	
Disable	When set to disable, the printer does not process network data while OFFLINE.
Enable	When set to enable, the printer continues to process (but not print) the current network/parallel job while the printer is OFFLINE until the printer's buffer is full.
Factory Default	Disable

Network > Control > AutoSW Timeout	
This is the timeout value used for the network to check the other port types for data to print. When the printer has not received data from the host after a certain period of time, it needs to time out in order to service the other ports.	
Minimum	10 second
Maximum	60 seconds
Factory Default	10 seconds

Network > Control > AutoSW Out	
This menu determines when the autoswitching process will start.	
Data Timeout	Allows autoswitching when no data has been received for the selected Time Out period.
Session Close	Allows autoswitching only when the Network Socket is closed.
Factory Default	Data Timeout

Network > Control > Active Interface	
This menu determines which interface is active when both the ethernet and WiFi options are present and connected.	
Automatic	The ethernet is chosen if the ethernet is connected.
Ethernet	Ethernet will be the chosen interface when both are connected.
WLAN	WLAN will be the chosen interface when both are connected.
Factory Default	Automatic

Network > Control > E-Net To Default
This executable menu will reset the printer and reset all the Network parameters to Factory defaults.

Network > Ethernet

WARNING **Most of these menu items will not change until configuration of the printer is deemed complete by the user and the printer is placed ONLINE. Upon going online, the printer will automatically reboot and set these options.**

Network > Ethernet > IP Address	
This item allows you to set the IP Address for the TCP/IP protocol using a virtual keyboard. Make sure you enter the complete IP address, including the period symbol between the segments.	
Structure	Seg1.Seg2.Seg3.Seg4
Factory Default	000.000.000.000
IMPORTANT	**Disable BootP, ARP or DHCP before trying to change the IP address.**
IMPORTANT	**If changed, the printer reboots when it is placed ONLINE.**

Network > Ethernet > Link Local IPv6	
This is the automatically generated Link Local IPv6 address, it is a read-only menu.	
IMPORTANT	**It is read-only.**

Network > Ethernet > Subnet Mask	
This item allows you to set the Subnet Mask for the TCP/IP protocol using a virtual keyboard. Make sure you enter the complete mask, including the period symbol between the segments.	
Structure	Seg1.Seg2.Seg3.Seg4
Factory Default	000.000.000.000
IMPORTANT	**Disable BootP, ARP or DHCP before trying to change the subnet mask.**
IMPORTANT	**If the printer has not rebooted after disabling BootP, ARP or DHCP then the value shown is not the static value. You MUST save this value or it will be lost when the printer is rebooted.**
IMPORTANT	**If changed, the printer reboots when it is placed ONLINE.**

Network > Ethernet > Gateway Address	
This item allows you to set the Gateway Address for the TCP/IP protocol using a virtual keyboard. Make sure you enter the complete Gateway address, including the period symbol between the segments.	
Structure	Seg1.Seg2.Seg3.Seg4
Factory Default	000.000.000.000
IMPORTANT	**Disable BootP, ARP or DHCP before trying to change the gateway address.**
IMPORTANT	**If the printer has not rebooted after disabling BootP, ARP or DHCP then the value shown is not the static value. You MUST save this value or it will be lost when the printer is rebooted.**
IMPORTANT	**If changed, the printer reboots when it is placed ONLINE.**

Network > Ethernet > MAC Address	
This item is the Manufacturer's Assigned Number, and is unique for each NIC. It is read-only.	
IMPORTANT	**It is read-only.**

Network > Ethernet > DHCP	
You can enable/disable the DHCP protocol using this option, but consult your administrator for the appropriate setting.	
Disable	DHCP is disabled and you set your own static IP address, subnet mask, and gateway address.
Enable	DHCP is enabled and IP address, subnet mask, and gateway address is assigned dynamically.
Factory Default	Enable
IMPORTANT	**If changed, the printer reboots when it is placed ONLINE.**

Network > Ethernet > BootP	
You can enable/disable the BootP protocol using this option, but consult your administrator for the appropriate setting.	
Disable	BootP is disabled.
Enable	BootP is enabled.
Factory Default	Disable
IMPORTANT	**If changed, the printer reboots when it is placed ONLINE.**

Network > Ethernet > IPv6 SLAAC	
You can enable/disable the SLAAC (Stateless Address Autoconfiguration) protocol using this option, but consult your administrator for the appropriate setting.	
Enable	SLAAC is enabled.
Disable	SLAAC is disabled.
Factory Default	Enable

Network > Ethernet > Ethernet Speed	
This menu appears only if a 10/100Base-T Network Interface Card (NIC) is installed. The Ethernet Speed menu has five different speed modes to allow compatibility with different systems and networks.	
Auto Select	Tells the 10/100Base-T NIC to perform an auto detection scheme and configure itself to be 10 Half Duplex, 10 Full Duplex, 100 Half Duplex, or 100 Full Duplex.
10 Half Duplex	Tells the 10/100Base-T NIC to communicate at 10 Megabits per second using half duplex.
10 Full Duplex	Tells the 10/100Base-T NIC to communicate at 10 Megabits per second using full duplex.
100 Half Duplex	Tells the 10/100Base-T NIC to communicate at 100 Megabits per second using half duplex.
100 Full Duplex	Tells the 10/100Base-T NIC to communicate at 100 Megabits per second using full duplex.
Factory Default	Auto Select

Network > WLAN

WARNING **Most of these menu items will not change until configuration of the printer is deemed complete by the user and the printer is placed ONLINE. Upon going online, the printer will automatically reboot and set these options.**

Network > WLAN> IP Address	
This item allows you to set the IP Address for the TCP/IP protocol using a virtual keyboard. Make sure you enter the complete IP address, including the period symbol between the segments.	
Structure	Seg1.Seg2.Seg3.Seg4
Factory Default	000.000.000.000
IMPORTANT	**Disable BootP, ARP or DHCP before trying to change the IP address.**
IMPORTANT	**If changed, the printer reboots when it is placed ONLINE.**

Network > WLAN > Link Local IPv6	
This is the automatically generated Link Local IPv6 address, it is a read-only menu.	
IMPORTANT	**It is read-only.**

Network > WLAN> Subnet Mask	
This item allows you to set the Subnet Mask for the TCP/IP protocol using a virtual keyboard. Make sure you enter the complete mask, including the period symbol between the segments.	
Structure	Seg1.Seg2.Seg3.Seg4
Factory Default	000.000.000.000
IMPORTANT	**Disable BootP, ARP or DHCP before trying to change the subnet mask.**
IMPORTANT	**If the printer has not rebooted after disabling BootP, ARP or DHCP then the value shown is not the static value. You MUST save this value or it will be lost when the printer is rebooted.**
IMPORTANT	**If changed, the printer reboots when it is placed ONLINE.**

Network > WLAN > Gateway Address	
This item allows you to set the Gateway Address for the TCP/IP protocol using a virtual keyboard. Make sure you enter the complete Gateway address, including the period symbol between the segments.	
Structure	Seg1.Seg2.Seg3.Seg4
Factory Default	000.000.000.000
IMPORTANT	**Disable BootP, ARP or DHCP before trying to change the gateway address.**
IMPORTANT	**If the printer has not rebooted after disabling BootP, ARP or DHCP then the value shown is not the static value. You MUST save this value or it will be lost when the printer is rebooted.**
IMPORTANT	**If changed, the printer reboots when it is placed ONLINE.**

Network > WLAN > MAC Address	
This item is the Manufacturer's Assigned Number, and is unique for each NIC. It is read-only.	
IMPORTANT	**It is read-only.**

Network > WLAN> DHCP	
You can enable/disable the DHCP protocol using this option, but consult your administrator for the appropriate setting.	
Disable	DHCP is disabled and you set your own static IP address, subnet mask, and gateway address.
Enable	DHCP is enabled and IP address, subnet mask, and gateway address is assigned dynamically.
Factory Default	Enable
IMPORTANT	**If changed, the printer reboots when it is placed ONLINE.**

Network > WLAN> BootP	
You can enable/disable the BootP protocol using this option, but consult your administrator for the appropriate setting.	
Disable	BootP is disabled.
Enable	BootP is enabled.
Factory Default	Disable
IMPORTANT	**If changed, the printer reboots when it is placed ONLINE.**

Network > WLAN > IPv6 SLAAC	
You can enable/disable the SLAAC (Stateless Address Autoconfiguration) protocol using this option, but consult your administrator for the appropriate setting.	
Enable	SLAAC is enabled.
Disable	SLAAC is disabled.
Factory Default	Enable

Network > WLAN Params

Network > WLAN Params > SSID Name	
A 1-32 character, case-sensitive string that identifies the Extended Service Set Identification (ESS_ID) network the unit is part of (ESS_ID is also called NET_ID). These characters can be alphanumeric, symbols, or spaces.	
IMPORTANT	**If changed, the printer reboots when it is placed ONLINE.**

Network > WLAN Params > Reset SSID Name	
Allows you to reset the SSID name	
IMPORTANT	**If changed, the printer reboots when it is placed ONLINE.**

Network > WLAN Params > Min Xfer Rate	
Allows you to set the minimum speed at which the Wireless Option will accept a connection (in millions of bits per second). The options are Auto-negotiate, 1Mb/sec, 2Mb/sec, 5.5Mb/sec, and 11Mb/sec.	
Minimum	1Mb/sec
Maximum	11Mb/sec
Factory Default	Auto Negotiate
IMPORTANT	**If changed, the printer reboots when it is placed ONLINE.**

Network > WLAN Params > Power Mgmt	
This allows you to set the power save mode and sleep time in milliseconds (ms). If set to zero, power-save mode will be disabled.	
Minimum	0 ms
Maximum	1000 ms
Factory Default	0 ms
IMPORTANT	**If changed, the printer reboots when it is placed ONLINE.**

Network > WLAN Params > Internat. Mode	
When enabled, the Wireless option adapts to international frequency requirements in Europe.	
Disable	International Mode is disabled.
Enable	International Mode is enabled
Factory Default	Disable
IMPORTANT	**If changed, the printer reboots when it is placed ONLINE.**

Network > WLAN Params > WEP Key 1 Format	
Allows you to format WEP Key 1 in ASCII or hexadecimal code.	
ASCII	Allows you to format WEP Key 1 in ASCII format.
Hexadecimal	Allows you to format WEP Key 1 in hexadecimal format.
Factory Default	Hexadecimal

Network > WLAN Params > WEP Key 1 Width	
This is the encryption strength. The options are 40 bits and 128 bits: 40 bits are weaker and 128 bits are stronger.	
40 bits	Allows you to use 40 bit encryption for WEP Key 1.
128 bits	Allows you to use 128 bit encryption for WEP Key 1.
Factory Default	128 bits

Network > WLAN Params > WEP Key 1	
The individual characters for WEP Key 1.	
IMPORTANT	**If changed, the printer reboots when it is placed ONLINE.**

Network > WLAN Params > WEP Key 2 Format	
Allows you to format WEP Key 2 in ASCII or hexadecimal code.	
ASCII	Allows you to format WEP Key 2 in ASCII format.
Hexadecimal	Allows you to format WEP Key 2 in hexadecimal format.
Factory Default	Hexadecimal

Network > WLAN Params > WEP Key 2 Width	
This is the encryption strength. The options are 40 bits and 128 bits: 40 bits are weaker and 128 bits are stronger.	
40 bits	Allows you to use 40 bit encryption for WEP Key 2.
128 bits	Allows you to use 128 bit encryption for WEP Key 2.
Factory Default	128 bits

Network > WLAN Params > WEP Key 2	
The individual characters for WEP Key 2.	
IMPORTANT	**If changed, the printer reboots when it is placed ONLINE.**

Network > WLAN Params > WEP Key 3 Format	
Allows you to format WEP Key 3 in ASCII or hexadecimal code.	
ASCII	Allows you to format WEP Key 3 in ASCII format.
Hexadecimal	Allows you to format WEP Key 3 in hexadecimal format.
Factory Default	Hexadecimal

Network > WLAN Params > WEP Key 3 Width	
This is the encryption strength. The options are 40 bits and 128 bits: 40 bits are weaker and 128 bits are stronger.	
40 bits	Allows you to use 40 bit encryption for WEP Key 3.
128 bits	Allows you to use 128 bit encryption for WEP Key 3.
Factory Default	128 bits

Network > WLAN Params > WEP Key 3	
The individual characters for WEP Key 3.	
IMPORTANT	**If changed, the printer reboots when it is placed ONLINE.**

Network > WLAN Params > WEP Key 4 Format	
Allows you to format WEP Key 4 in ASCII or hexadecimal code.	
ASCII	Allows you to format WEP Key 4 in ASCII format.
Hexadecimal	Allows you to format WEP Key 4 in hexadecimal format.
Factory Default	Hexadecimal

Network > WLAN Params > WEP Key 4 Width	
This is the encryption strength. The options are 40 bits and 128 bits: 40 bits are weaker and 128 bits are stronger.	
40 bits	Allows you to use 40 bit encryption for WEP Key 4.
128 bits	Allows you to use 128 bit encryption for WEP Key 4.
Factory Default	128 bits

Network > WLAN Params > WEP Key 4	
The individual characters for WEP Key 4.	
IMPORTANT	**If changed, the printer reboots when it is placed ONLINE.**

Network > WLAN Params > Default WEP Key	
Allows you to set the default WEP key (1-4) or None (0).	
Factory Default	0
IMPORTANT	**If changed, the printer reboots when it is placed ONLINE.**

Network > WLAN Params > Reset WEP Keys	
Allows you to reset all four WEP keys (WEP Key 1 through WEP Key 4) at one time.	
IMPORTANT	**If changed, the printer reboots when it is placed ONLINE.**

Network > WLAN Params > WPA Mode	
Selects the WPA wireless security mode.	
Disable	WPA security is disabled.
Personal	Selects personal or pre-shared key (PSK) mode for WPA security.
Enterprise	802.1x is more secure than WPA2 mode. Enterprise mode uses dynamic encryption keys distributed securely after a use logs in with their username and password, or provides a valid digital certificate. An Extensible Authentication Protocol (EAP) is used for authentication.
Factory Default	Disable
IMPORTANT	**If changed, the printer reboots when it is placed ONLINE.**

Network > WLAN Params > WPA Cipher	
Selects the WPA wireless security cipher setting.	
Disable	WPA cipher is disabled.
TKIP	Activates Temporal Key Integrity Protocol (TKIP).
AES	Activates Advanced Encryption Standard (AES).
TKIP+AES	Activates both TKIP and AES ciphers. This mode is sometimes called PSK2-mixed mode.
Factory Default	TKIP if WPA mode is not disabled
IMPORTANT	**If changed, the printer reboots when it is placed ONLINE.**

Network > WLAN Params > WPA Pass-Phrase	
Allows you to set the WPA passphrase.	
IMPORTANT	**If changed, the printer reboots when it is placed ONLINE.**

Network > WLAN Params > Reset WPA P-Phs	
Allows you to reset all 32 bytes of the WPA passphrase at once.	
IMPORTANT	**If changed, the printer reboots when it is placed ONLINE.**

Network > WLAN EAP

WARNING **Most of these menu items will not change until configuration of the printer is deemed complete by the user and the printer is placed ONLINE. Upon going online, the printer will automatically reboot and set these options.**

Network > WLAN EAP > EAP Mode	
Selects the Extensible Authentication Protocol (EAP) to be used.	
None	EAP not used.
LEAP	Uses Lightweight Extensible Authentication Protocol (LEAP)..
PEAP	Uses Protected Extensible Authentication Protocol (PEAP)..
TTLS	Uses Tunneled Transport Layer Security.
TTS	Uses Transport Layer Security
Factory Default	None
IMPORTANT	**If changed, the printer reboots when it is placed ONLINE.**

Network > WLAN EAP > EAP User	
The EAP Username.	
IMPORTANT	**If changed, the printer reboots when it is placed ONLINE.**

Network > WLAN EAP > Reset EAP User	
Allows you to reset the EAP Username.	
IMPORTANT	**If changed, the printer reboots when it is placed ONLINE.**

Network > WLAN Params > EAP Password	
The EAP Password.	
IMPORTANT	**If changed, the printer reboots when it is placed ONLINE.**

Network > WLAN Params > Reset EAP Pswd	
Allows you to reset the EAP Password.	
IMPORTANT	**If changed, the printer reboots when it is placed ONLINE.**

Configs

Configs > Control

Configs > Control > Save Config	
This option allows you to save up to eight unique configurations to meet different print job requirements. This eliminates the need to change the parameter settings for each new job. The configurations are stored in memory and will not be lost if you turn off the printer. The factory default configuration cannot be changed.	
Minimum	1
Maximum	8
Factory Default	1

Configs > Control > Load Config	
The printer can store up to eight configurations in memory. This parameter allows you to select and load a specific configuration.	
Factory	The factory configuration is the default.
1-8	Different saved configurations.
Factory Default	Factory

Configs > Control > Print Config	
This option is used to print a listing of various stored printer configurations. We recommend you store printouts of your configurations in a safe place for quick referral.	
Current	The current configuration loaded in DRAM.
Factory	The default factory configuration.
Power-Up	The configuration chosen as the power-up config.
All	All saved configurations, including factory.
1-8	Specific saved configuration selected.
Factory Default	Current

Configs > Control > Delete Config	
You can delete one or all of your eight customized configurations. The Factory default configuration cannot be deleted.	
All	All configurations will be deleted, except Factory.
1-8	Specific saved configuration will be deleted.
Factory Default	All

Configs > Control > Power-Up Config	
You can specify any one of nine configurations (1-8 saved custom configurations or Factory) as the power-up configuration.	
Factory	The Factory configuration is the power-up default.
1-8	Specific saved configuration will be the default config.
Factory Default	Factory

Configs > Control > Auto Save	
Automatically save the configuration when returning to the ONLINE state after changes have been made to the configuration.	
Disable	Do not automatically save the configuration.
Enable	Automatically save the configuration.
Factory Default	Enable

Configs > Custom

Configs > Custom > Name Config 1 … Name Config 8	
Using the virtual keyboard of the UI, you may specify a 15-character name which can be used to refer to a configuration. The name you enter for a configuration will be used in the Load Config, Save Config, Print Config, Delete Config, and Power-Up Config menus. The names can only be cleared by using the Reset Cfg Names menu.	
String	Any 15-character string using UI keyboard.
Factory Default	Config 1 … Config 8

Configs > Custom > Reset Cfg Names	
You can reset specific configuration names back to the default value of the configuration number.	
All	Reset all custom configuration names.
1-8	Reset a specific custom configuration name.
Factory Default	1

Tools

Tools > Print Tests

Tools > Print Tests > Run Tests	
The printer tests below allow you to check for proper printer operation and print quality. Once you have selected the desired test, press the ENTER key to start printing. If the Test Count option (below) is set to Continuous, press ENTER key again to stop printing.	
Auto Calibrate	Senses paper out, perforation, gap, or mark, and calibrates the printer for the currently installed media.
Checkerboard	This pattern helps identify marginal printhead elements, quality of edge sharpness, and uneven print quality.
Grey	This pattern helps identify burned out printhead elements and uneven print quality.
Grid	This pattern helps identify edge sharpness and uneven print quality.
Current Config	Prints the current printer configuration and helps identify the text print quality. Includes printhead statistical data in the header.
Left Test	Prints a pattern containing a series of ladder-type bar code symbols, starting with four and decrementing by one symbol on each print until a single symbol prints on the left side. This pattern helps identify ribbon wrinkle problems.
Right Test	Prints a pattern containing a series of ladder-type bar code symbols, starting with four and decrementing by one symbol on each print until a single symbol prints on the right side. This pattern helps identify ribbon wrinkle problems.
Combo Test	Prints a combined left test and right test.

Tools > Print Tests > Run Tests	
Ethernet Test	Prints the Network Interface statistics.
Barcode Demo 1D	Prints text and barcodes with the barcodes positioned at the left and right margins of the standard label media supplied with the printer. The test automatically produces output for 4 and 6 inch printers at 203 dpi and 300 dpi. **NOTE:** Since this test is designed to prove ODV is working, the printer is automatically put ONLINE before printing begins.
Barcode Demo 2D	Prints picket, ladder, and 2-D barcodes with the barcodes positioned at the left and right margins of the standard label media supplied with the printer. **NOTE:** The printer is automatically put ONLINE before printing begins.
Novram Err Log	Prints detailed information about the most recent Novram related failure. This option is useful when the control panel faults with “Bad NVM” or “ILL NVM” type errors. **Contact the Customer Support Center if such an error occurs.**
Print Quality	Prints various patterns on one page that help in the assessment of print quality, including Grey, Checkerboard, and text. Number of patterns depends on the current form length. This test should be run on at least 6-inch media for the full test print.
ODV Report	This item appears only if the validator is installed. Prints a report of the validation statistics since the printer was turned on or since the last data reset.
Fine Grid	This pattern helps identify edge sharpness and uneven print quality, but uses a much smaller grid than the earlier “Grid” selection above.
Factory Default	Auto Calibrate

Tools > Print Tests > Test Count	
This item selects the number of times the selected test pattern will be printed.	
Continuous	Print continuously until the user stops the test by printing the ENTER key.
Selections	Choose among 1 Page, 2 Pages, 5 Pages, or 10 Pages.
Factory Default	Continuous

Tools > Diagnostics

Tools > Diagnostics > Print Error Log
This executable menu prints the current log of errors. Most non-routine faults (RIBBON FAULT, PRINT HEAD HOT) are stored in the error log.

Tools > Diagnostics > Clear Error Log
This executable menu clears the error log.

Tools > Diagnostics > Hex Dump Mode	
This turns on the hex dump diagnostic. See *Chapter* 6 *Diagnostics and Troubleshooting* page 269 for more information.	
Disable	Hex dump mode is turned off.
Enable	Hex dump mode is turned on and all incoming data will be printed in hexadecimal format.
Factory Default	Disable
IMPORTANT	**If the IPDS option is installed and IPDS (by default) is active, then enabling Hex Dump might not be possible. In this case, the user will be alerted via an LCD warning.**

Tools > Diagnostics > Job Capture	
Enable a job capture function. The procedure is to enable this menu, send the job of interest, then disable the menu. Once this procedure is completed, a file Job_XX.cap (e.g., Job_01.cap) will be saved to either the USB Drive, SD card, or Flash memory (in that order of priority). More than one capture can be made. When enabling this feature again, another Job_XX.cap file will be saved (e.g., Job_02.cap).	
Disable	Disable the Job Capture.
Enable	Enable the Job Capture.
Factory Default	Disable

Tools > Diagnostics > Label Capture	
This feature can be used to save a label bitmap to a PNG file on the USB drive, SD card, or Flash File system (in that order of priority). The value set in the menu provides the number of labels to be saved. As each label is printed, the menu value will automatically decrement back to zero and will then be disabled. Files will be saved with names in the format of Page_XXX.PNG (e.g., Page_001.png, Page_002.png, …).	
Minimum	0 (Feature is disabled)
Maximum	5 (Number of labels to be captured)
Factory Default	0

Tools > Advanced

This set of tools are advanced types of debugging that need to be coordinated with Printronix Customer Support. They capture information that only the Engineering can decipher. This section was designed to make it easier for Customer Support to acquire such information from the end user by storing diagnostic data/files into the printer flash, SD card, or USB drive. No longer is Customer Support necessarily required to install a special debug cable and be on site to capture valuable diagnostics.

Each different diagnostic in this section will store files in the printer's file system using different names. For example, in the case of auto dump files, a set of files "AUTODP*.LOG" (AUTODP1a.LOG, AUTODP1b.LOG, etc) will be stored in the printer's flash file system. Diagnostics files stored in flash can be uploaded on an individual basis using the NIC webpage, PrintNet Enterprise Suite, or collectively and easily by using the menu **Tools > Advanced > Copy to SD**, or menu **Tools > Advanced > Copy to USB**. Once all such diagnostic files are acquired, it can be sent to Printronix Customer Support.

Note that the printer can store multiple diagnostic results. For example, if the first **System Dump** menu was executed, files "SYS_DP1*.LOG" would be stored. If that same menu was executed at a later time, the files "SYS_DP2*.LOG" would then be stored.

Tools > Diagnostics > Auto Dump	
When enabled, there is an automatic capture of debug information when a processor fault occurs. This information is stored in the flash file system as a set of files “AUTODP*.LOG” (AUTODP1a.LOG, AUTODP1b.LOG, etc). The files can be easily uploaded as described above.	
Disable	Auto dump mode is turned off.
Enable	A dump file is automatically created and stored in FLASH memory as “AUTODP*.LOG” when the processor fault occurs. Reboot after the fault and retrieve this file using one of the methods mentioned above.
Factory Default	Enable
IMPORTANT	**Once a file is stored in FLASH, it will not be replaced with a new file if another problem occurs. This is done to prevent FLASH memory from filling over time.**

Tools > Advanced > System Dump	
When executed, the system temporarily goes into a HALT mode (white screen flashes) and stores files “SYS_DP*.LOG” which hold similar information saved for the Auto dump case.	
IMPORTANT	**When the processed is finished, the printer should come out of HALT mode and operation should continue. However, there are situations in the printer cannot recover from the HALT process. If this happens, reboot the printer and then recover the SYS_DP*.LOG files.**

Tools > Advanced > Debug Setup
If a file “custflag.dbg” is created by Printronix Customer Support, it can be passed onto the end user to be downloaded into the printer. Such a file would be used to enable certain embedded diagnostic flags in the firmware. If this file is present, then the menu **Debug Setup** is unhidden. Note that if the “custflag.dbg” is not downloaded, the menu **Debug Capture** is still available with some default level of diagnostic capture. Typically, the user would execute the **Debug Setup** menu, then run the problem scenario, followed by executing the menu **Debug Capture**. This would capture the debug information in files named “DBG_DP*.LOG”.

Tools > Advanced > Debug Capture
If a file “custflag.dbg” is created by Printronix Customer Support, it can be passed onto the end user to be downloaded into the printer. Such a file would be used to enable certain embedded diagnostic flags in the firmware. If this file is present, then the menu **Debug Setup** is unhidden. Note that if the “custflag.dbg” is not downloaded, the menu **Debug Capture** is still available with some default level of diagnostic capture. Typically, the user would execute the **Debug Setup** menu, then run the problem scenario, followed by executing the menu **Debug Capture**. This would capture the debug information in files named “DBG_DP*.LOG”.

Tools > Advanced > Copy to SD
If the SD card is present in the printer, users can quickly and easily copy all diagnostic files from the flash system to the SD card in one simple step instead of having to individually find those files using NIC webpage or within the **System > Flash File Edit > Copy to SD** menu.

Tools > Advanced > Copy to USB
If the USB drive is present in the printer, users can quickly and easily copy all diagnostic files from the flash system to the USB drive in one simple step instead of having to individually find those files using NIC webpage or within the **System > Flash File Edit > Copy to USB** menu.

Tools > Advanced > Delete & Optimize
After the diagnostic files have been uploaded from the flash system or the user decides they are no longer needed, they can be easily deleted in one simple step by executing this menu. Furthermore, after deleting the files, the system will perform a **System > Flash File Edit > Optimize & Reboot** operation automatically so that the flash resources are freed.

Tools > PTF Debug

This PTF (Printronix Trace Facility) diagnostics tool is used to trace real-time activities in the printer. Any use of this function must be coordinated with Printronix Customer Support. This tool was designed to make it easier for Customer Support to acquire such information by storing PTF trace files into the printer flash, SD card, or USB drive without requiring the end user install a special debug cable and be on site to capture valuable information.

The PTF diagnostic files saved are named “PTF_DP*.LOG” (PTF_DP1a.LOG, PTF_DP1b.LOG, etc) and stored in the printer’s USB drive (if installed), SD card (if installed), or flash memory. If stored in flash memory, such files can be uploaded on an individual basis using the NIC webpage, PrintNet Enterprise Suite, or collectively and easily by using the menu **Tools > Advanced > Copy to SD**, or menu **Tools > Advanced > Copy to USB**. Once all such diagnostic files are acquired, they should be sent to Printronix Customer Support.

Note that the printer can store multiple diagnostic results. For example, if the first **PTF Debug > Save Trace** menu was executed, files “PTF_DP1*.LOG” would be stored. If that same menu was executed a second time, the files “PTF_DP2*.LOG” would then be stored, and so forth.

Tools > PTF Debug > Buffer Size	
This menu reserves an internal trace buffer (DRAM) needed to capture the PTF data. Depending on the type of failure and the length of time needed to create it, the buffer might need to increase or decrease.	
Minimum	0 KB (no PTF trace buffer available)
Maximum	1 MB (largest PTF trace buffer possible)
Factory Default	4 KB
IMPORTANT	**The size of the actual PTF_DP*.LOG files saved will vary based on how much of the trace buffer is actually used.**

Tools > PTF Debug > Clear Trace
Clears the PTF internal trace buffer so that new information can be gathered at the beginning. This is useful to reset trace data prior to creating a failure event.

Tools > Advanced > Save Trace
This dumps the PTF trace buffer to files named with the format “PTF_DP*.LOG” as described earlier in this section.

Tools > PTF Flags

This section is used to select certain areas of the PSA system to debug with PTF tracing. These menus would only be modified with the direction of Customer Support. The different menus will be listed but do not need a detailed explanation.

All menus below are Enable/Disable.

Tools > PTF Flags > Global Enable	
This menu enables the use of the PTF trace facility.	
Factory Default	Enable

Tools > PTF Flags > Configuration	
This menu enables information related to menu and printer configuration.	
Factory Default	Enable

Tools > PTF Flags > Structures	
This menu is reserved to provide information related to major internal data structures.	
Factory Default	Disable

Tools > PTF Flags > Messages	
This menu enables information about inter-task messaging.	
Factory Default	Enable

Tools > PTF Flags > Host IO	
This menu is reserved for tracing host IO drivers.	
Factory Default	Disable

Tools > PTF Flags > Command	
This menu is reserved for tracing emulation command parsing.	
Factory Default	Disable

Tools > PTF Flags > Text	
This menu is reserved for tracing emulation text and font selection.	
Factory Default	Disable

Tools > Statistics

All of the menus shown here are read-only.

Tools > Statistics > Printer On Time
Displays the cumulative time in hours the printer has been powered on. This value is set to zero at the factory.

Tools > Statistics > Total Media Dist
Displays the cumulative number of inches the printer has moved media. This value is set to zero at the factory.

Tools > Statistics > Total Label Count
Displays the cumulative number of labels printed, regardless of size. This value is set to zero at the factory.

Tools > Statistics > Head On Time
Displays the time that power has been applied to the printhead since its installation. This value is kept with each printhead and updated automatically when a different printhead is installed.

Tools > Statistics > Head Print Dist
Displays the length of media actually printed since the last Reset Head Data operation. This value is set to zero at the factory.

Tools > Statistics > Head Life
Displays the percent of life left in the print head.

Tools > About

All of the menus shown here are read-only.

Tools > About > Controller Board Version
Displays the Controller board version.

Tools > About > Head DPI
Displays the printhead type installed in dots per inch (203 dpi, 300 dpi or 600 dpi).

Tools > About > FLASH Installed
Displays the total FLASH memory installed (128 MB).

Tools > About > DRAM Installed
Displays the total DRAM memory installed (512 MB).

Tools > About > CPU Clock
Displays the current speed of the main processor.

Tools > About > Printer F/W
Displays the printer firmware version and part number.

Tools > About > Validator F/W
Displays the validator firmware version and part number (if installed).

Tools > About > RFID Reader F/W
Displays the RFID reader firmware version (if installed).

Tools > About > RFID Reader Hd/W
Displays the RFID reader hardware version. (if ThingMagic RFID reader is installed)

Tools > About > Wifi F/W
Displays the Wifi firmware version (if installed).

Tools > About > Feature File
Displays the feature file part number (if present).

ODV-2D

The On-Line Data Validator ICON will always appear, but will be in grey when not installed. The icon will appear in color when the ODV is installed and enabled or with a red slash when not enabled.

Please see the *Online Data Validator 2D User's Manual* available on our website for a detailed description of all menus and usage.

RFID

When equipped with the RFID option, the RFID ICON will always appear, but will be in grey when the RFID is disabled. When enabled, the icon will appear in color.

Please see the *RFID Labeling Reference Manual* available on our website for a detailed description of how the menus work and interact.

4 *Downloading Firmware*

There is 128 MB of FLASH memory on the controller board. The printer firmware which includes printer control languages (the “emulations”), the engine control, and printer operating system software are loaded into FLASH memory at the factory, but there are occasions when you may have to load this software:

- Firmware upgrade to a newer level
- Changing to a different firmware type (e.g., TN 5250 or Postscript/PDF).
- Replacing a controller or reloading firmware if FLASH becomes corrupt.

Once you have the target firmware copied onto your local PC or SD card, you can employ one of the various download methods presented in this section. Downloading firmware can be accomplished through any host IO installed on the printer, but may not be valid for all methods.

IMPORTANT **The target firmware must be consistent with the options present in the controller Security Key. Otherwise, the firmware download will be prevented**.

With exception to the manual two-key and manual three-key power-up sequences, downloading new firmware does not require the user to put the printer into any special mode. Now downloading methods are employed when the printer is ONLINE and ready to receive data. This makes the download procedure easy.

FLASH is used to store the firmware, but it also contains a file system that holds System and User Flash Files. User Flash Files consist of downloaded fonts, logos, forms, setup files, feature files, CST files, and files that are specific to the user’s setup or application. These files are either preserved or deleted based on the download method used as shown in *Table 7* on page 249.

IMPORTANT **Regardless of download method, any saved configurations will be erased. Before starting a download procedure, be sure that you have printed or saved configurations on your host computer or using PrintNet Enterprise Suite so they can be restored after the download process is complete.**

NOTE: **When the firmware download has completed, the FLASH memory will automatically be optimized to maximize the amount of available FLASH memory.**

Table 7. Firmware Download Methods

Firmware Download Method	File Type(s)	User FLASH Files
Web Page (Ethernet only). User needs the network configured, a browser, and know the IP address.	FILENAME.prg	Preserved
Automatic download (any host IO). Using the FILENAME.exe, firmware can be downloaded from a Windows Command Prompt without having to manually put the printer into download mode.	FILENAME.exe	Preserved
Manual two-key download (any host IO). This two-key (LEFT SOFT KEY + RIGHT SOFT KEY) power-up sequence puts the printer into download mode. Firmware can be loaded through any host IO port.	FILENAME.prg FILENAME.exe	Preserved
Manual two-key download (USB or SD Card). This two-key (LEFT SOFT KEY + RIGHT SOFT KEY) power-up sequence puts the printer into download mode. Firmware program file (.prg) must be copied to the USB drive or SD card and renamed "UPGRADE".	FILENAME.prg renamed to "UPGRADE"	Preserved
Manual three-key download (USB or SD Card). This three-key power-up sequence (LEFT SOFT KEY + RIGHT SOFT KEY + DOWN ARROW) should be used in situations in which a new controller is installed, the program in FLASH is corrupt, or a different firmware type will be installed. Firmware must be loaded via USB or SD Card.	FILENAME.prg FILENAME.exe	Deleted
PrintNet Enterprise (Ethernet only). User must install the PrintNet Enterprise application from our company's website. This is the most versatile and powerful method to upgrade printers but requires your computer to run Java™ programs.	For a detailed description, refer to the *PrintNet Ethernet User's Manual*.	

Firmware File Types (.prg) and (.exe)

Using firmware with an *.exe* extension **FILENAME.exe** is convenient. However, firmware with the *.exe* extension may not be available in all situations. The **FILENAME.prg** file can be extracted from the **FILENAME.exe** file by running the .exe file like an application.This will extract the ***FILENAME.prg*** file in the same directory where *FILENAME.exe* was executed. For example, executing ***P323456.exe*** in the directory C:\download will generate a file C:\download***P323456.prg***.

Web Page Download

NOTE: This download method requires firmware with the .prg extension *FILENAME.prg.*

1. Make sure the printer is powered up, in ONLINE mode, and that the Ethernet cable is connected.
2. Get the IP address from the front panel ONLINE screen (or under Network in Settings).
3. Enter the printer's IP address in your browser (e.g., http://10.224.5.21).
4. When prompted for a user name and password, enter "root" for user name and click OK.
5. Click "System" in the Configuration box.

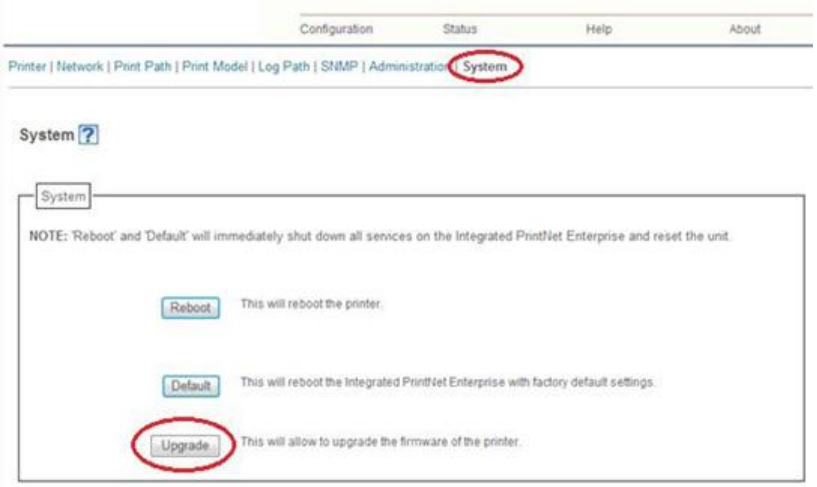

Figure 1 System Configuration Upgrade

6. Click the "Upgrade" button.
7. Browse to the directory or enter ***FILENAME.prg*** in the "File to upload" field and click "Upgrade". A Warning message opens.

Figure 2 Uploading Firmware File for Upgrade

8. Click "Ok" to continue. After a few minutes, you are prompted to reboot.
9. Click "Yes".

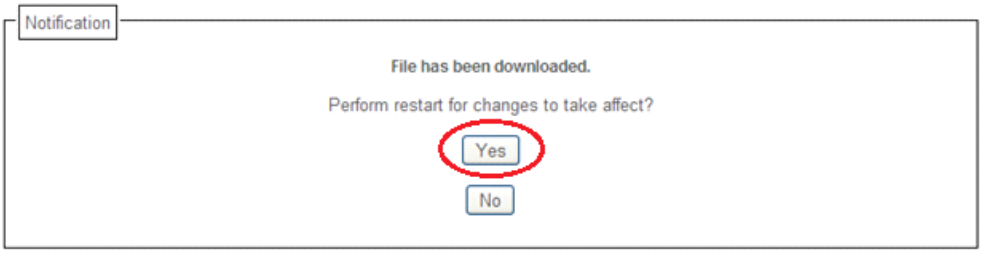

Figure 3 Confirm Reboot

10. Wait until the printer is finished upgrading firmware.

Figure 4 Waiting for Firmware Upgrade Completion

11. When the Web Page is redirected, the download process in complete.

Automatic Download (.exe)

The firmware can be downloaded without requiring the user to manually put the printer into download mode.

NOTE: This download method requires firmware in the form ***FILENAME.exe***, which should be a six digit number with the **.exe** extension (e.g., **123456.exe**).

1. Make sure the printer is powered up, in ONLINE mode, and that the applicable host IO cables are connected.
2. Navigate to the directory where the target firmware resides.

IMPORTANT **For USB connections, the Windows Driver must be installed.**

3. Install the Windows Driver from the website. During the installation, make sure to share the printer when prompted and record the “Share name”.

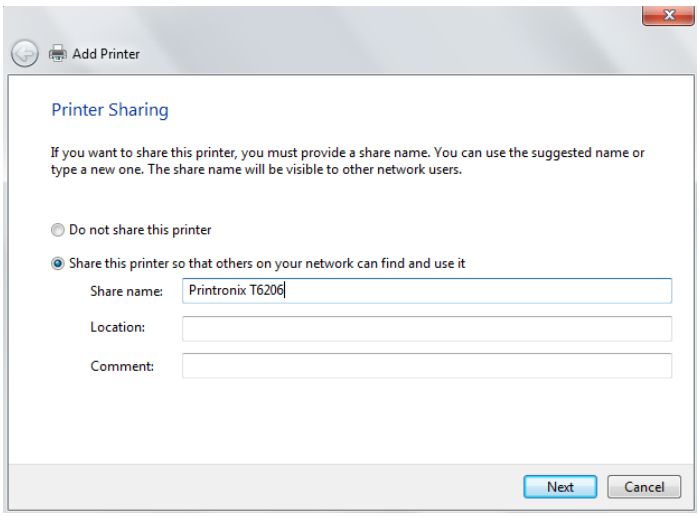

Figure 5 Selecting to Share the Printer

IMPORTANT **For USB connections, the printer must have a “Share name” established.**

4. The “Share name” will be needed when executing the ***FILENAME.exe*** command. This should be accomplished during installation, but can be verified at any time. Select the driver, right-click the mouse button and select “Printer Properties”. Click the “Sharing” tab, make sure the “Share this printer” box is check marked, and enter the “Share name”.

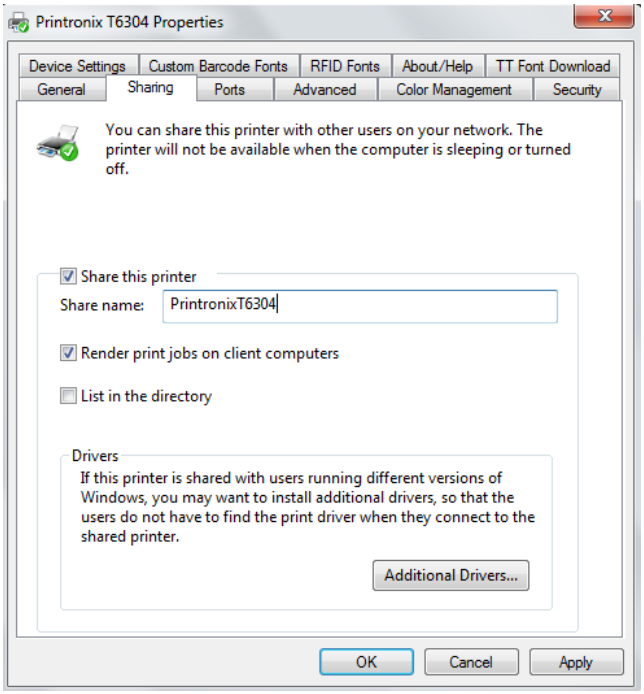

Figure 6 Setting Printer Properties Sharing Options

5. Start a Windows Command Prompt session.
6. Navigate to the directory with the target firmware (e.g., c:\download).
7. Execute ***FILENAME.exe*** as follows:

Connection Type	Enter Command
Parallel	***FILENAME* –a -pb** <Enter>
Serial	**mode COM1:9600,N,8,1** <Enter> **mode LPT1=COM1** <Enter> ***FILENAME* –a -pb** <Enter>
USB	***FILENAME* –a –pbSharedName** <Enter> where *SharedName* of the printer is the 'Share name' entered during installation.
Ethernet	***FILENAME -n xxx.xxx.xxx.xxx*** <Enter> where *xxx.xxx.xxx.xxx* represents the IP address.

WARNING **DO NOT interrupt the downloading process once it has started. Interrupting a download will leave the flash memory on the controller PCBA incompletely loaded, and the printer may not boot up.**

8. When the new software has successfully loaded into flash memory and the printer has reset itself, the process is complete.

Manual Two-Key Download Sequence

NOTE: This download method can be completed with firmware in the form of ***FILENAME.prg*** or ***FILENAME.exe.***

The following steps prepare the printer for download. When the printer is in the download mode, any host IO can be used to download the firmware. Serial IO is not recommended due to the size of the firmware and the time it takes to complete. Therefore, it is not discussed in this document.

1. Set the printer power switch to O (Off).
2. Connect the Ethernet cable to the printer interface.
3. Press and hold down the **LEFT SOFT KEY** + **RIGHT SOFT KEY** on the printer's control panel.
4. Set the printer power switch to I (On).
5. After five seconds, release the front panel keys.
6. Wait for the printer to power-up and displays "PROGRAM DOWNLOAD" on the front panel.
7. Start a Windows Command Prompt session.
8. Navigate to the directory with the target firmware (e.g., c:\download).
9. Send the firmware to the printer as described for various host IO options:
   - *Sending Firmware via Ethernet (LPR)* on page 255
   - *Sending Firmware via USB* on page 255

Manual Three-Key Download Sequence

If the flash memory contains only boot code (e.g., if it is new), or if flash memory is corrupt, or you want to delete all Flash User Files, you must download software using the manual three-key download method. The SD card is the only way to access this method.

1. Rename the FILENAME.prg to "UPGRADE" in the SD card root directory.
2. Set the printer power switch to O (Off).
3. Insert the SD card into the SD card slot.
4. Press and hold down the **LEFT SOFT KEY**, **RIGHT SOFT KEY**, and **DOWN ARROW** panel keys.
5. Set the printer power switch to I (On).
6. After five seconds, release the control panel keys.
7. The printer must power-up so this may take up to 1-2 minutes. Wait until "DOWNLOAD MODE" displays on the screen before proceeding.
8. The downloading process will begin automatically and the progress will be shown on the front panel. Wait until it completes and the printer is fully rebooted with the new firmware.
9. Set the printer power switch to O (Off)
10. Remove the SD card – this completes the process.

Sending Firmware in Download Mode

This section describes how to send the firmware data to the printer using the desired host IO. Serial IO is not recommended due to the size of the firmware and the time it takes to complete. Therefore, it is not discussed in this document

NOTE: The three-key download sequence only allows download through the SD card.

Although the program file ***FILENAME.prg*** is used in the examples, any file with a Printronix header can be substituted in this process to download flash files.

Sending Firmware via Ethernet (LPR)

NOTE: You will need the IP Address of the printer.

1. Enter the following to start the LPR program:

   lpr -S ***xxx.xxx.xxx.xxx*** -P d1prn *FILENAME.prg*
   where xxx.xxx.xxx.xxx is the IP Address of the printer.

WARNING **DO NOT interrupt the downloading process once it has started. Interrupting a download will leave the FLASH memory on the controller PCBA and NIC incompletely loaded, and the printer may not boot up.**

2. The process is complete when the new software has successfully loaded into flash memory and the printer has reset itself.

Sending Firmware via USB

This section explains how to download firmware through the USB port. This can be completed with firmware in the form ***FILENAME.prg***.

IMPORTANT **For USB connections, the Windows Driver must be installed.**

1. Install the Windows Driver from the website. During the installation, make sure to share the printer when prompted and record the "Share name".

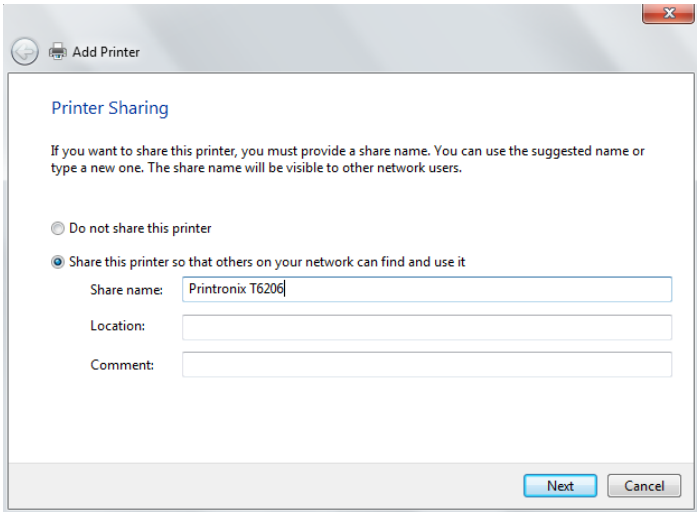

Figure 7 Selecting to Share the Printer

IMPORTANT **For USB connections, the printer must have a "Share name" established.**

2. The "Share name" will be needed when sending the data through the USB port. This should be accomplished during installation, but can be verified at any time. Select the driver, right-click the mouse button and select "Printer Properties". Click the "Sharing" tab, make sure the "Share this printer" box is check marked, and enter the "Share name".

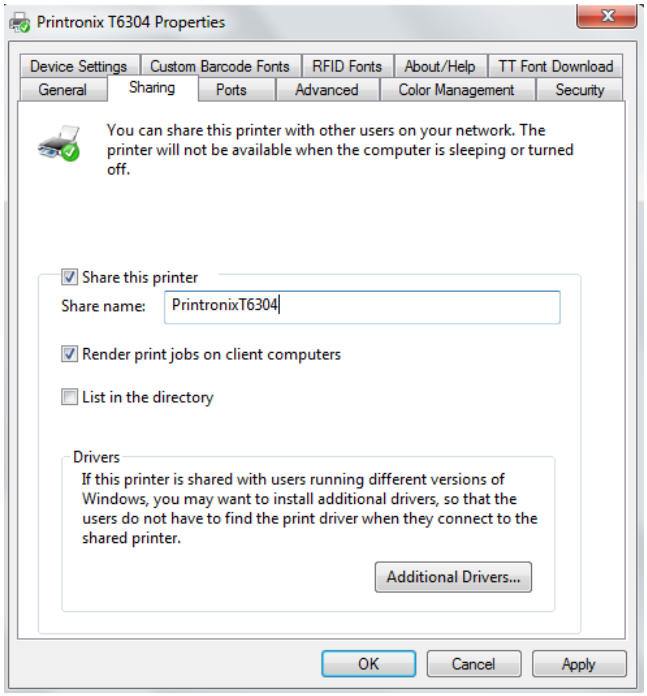

Figure 8 Setting Printer Properties Sharing Options

3. Start a Windows Command Prompt session.
4. Navigate to the directory with the target firmware (e.g., c:\download).
5. Send the file using the following command: "COPY /b <File Name> \\COMP_NAME\Printers_Shared_Name" where COMP NAME is the name of the laptop or PC and can be found in the Computer Properties screen and Printers_Shared_Name is the shared name created above.
6. The process is complete when the new software has successfully loaded into flash memory and the printer has reset itself.

IMPORTANT **DO NOT interrupt the downloading process once it has started. Interrupting a download will leave the flash memory on the controller PCBA and NIC incompletely loaded, and the printer may not boot up.**

Sending Firmware via Parallel

This download method can be completed with firmware in the form

FILENAME.exe *or* ***FILENAME.prg****.*

NOTE: The parallel option must be installed.

1. Copy the firmware to the printer by issuing these commands at the Command prompt:

   `copy /b` ***`FILENAME.prg`*** **`lpt1:`** `<Enter>`

   where *FILENAME.prg* is the target firmware

   or

   FILENAME –pb <Enter>

   where *FILENAME.exe* is the target firmware

IMPORTANT **DO NOT interrupt the downloading process once it has started. Interrupting a download will leave the FLASH memory on the controller PCBA and NIC incompletely loaded, and the printer may not boot up.**

2. The process is complete when the new software has successfully loaded into flash memory and the printer has reset itself.

Downloading Files to the Main File System

User Files can be downloaded into the Main File System (onboard PCB Flash) in a variety of ways as discussed in this section. This section does not cover specific methods used by the emulations but rather general ways of downloading files as shown in *Table 8*. Font download is discussed in a later section.

Table 8. File Download Methods

File Download Method	File Preparation
Web Page (Ethernet only). User needs to know the IP address and have a browser.	None required.
PTX_SETUP (any host IO). User can employ PTX_SETUP commands around the file data to store the file into the Main File System.	Binary (raw) data of the file is embedded within PTX_SETUP commands.
Manual two-key download (any host IO). This two-key (**LEFT SOFT KEY** + **RIGHT SOFT KEY**) power-up sequence puts the printer into download mode. Files can then be downloaded.	Use the PSA File Utility to create files that can be loaded in download mode.
PrintNet Enterprise (Ethernet only). User must install the PrintNet Enterprise application from the website. This is the most versatile and powerful method to download files but also requires that your computer can run Java™ programs.	For a detailed description, refer to the *PrintNet Ethernet User's Manual*.

NOTE: Depending on the file download method, the file itself may need to be modified so that when it is downloaded to the printer, the printer stores the file with the correct Main File System name and file type.

Filename Extensions Not Shown in Menus

Files with one of the filename extensions below (upper or lower case) are considered system files and are not shown in *System > Flash File View* or within the *System > Flash File Edit > Delete Files* menu.

NOTE: DO NOT download any user files with the extensions shown in *Table 9.*

Table 9. Filename Extensions Not Shown In Menus

Extensions		
*.bin	*.inf	*.ras
*.cpg	*.lfi	*.rfv
*.eng	*.map	*.sec
*.fon	*.pat	
*.gz	*.qsm	

File Properties Not Shown in Menus

Files with one of the properties listed below (case sensitive) are considered system files and are not shown in *System* > *Flash File View* or within the *System* > *Flash File Edit* > *Delete Files* menu.

NOTE: DO NOT download any user files with the one of the properties shown in *Table 10.*

Table 10. File Properties Not Shown In Menus

Properties		
Prot	NetC	NGif
Rmap	Rfnt	Rmnu
Rprg	Eprg	VERS
ASIC	FPGA	UMCA
Rval	XHEX	RULE
CRft	Rver	Rsec
SORT		

Web Page Download

1. Make sure the printer is powered up, in ONLINE mode, and the Ethernet cable is connected.
2. Obtain the IP address from the front panel ONLINE screen (or under Network in Settings).
3. Enter the IP address of the printer in your browser (e.g., http://10.224.5.21).
4. Enter “root” for the user name when prompted, and click OK.
5. Click “Printer” in the Configuration box. The following webpage will display. Click “File Management” to download the file.

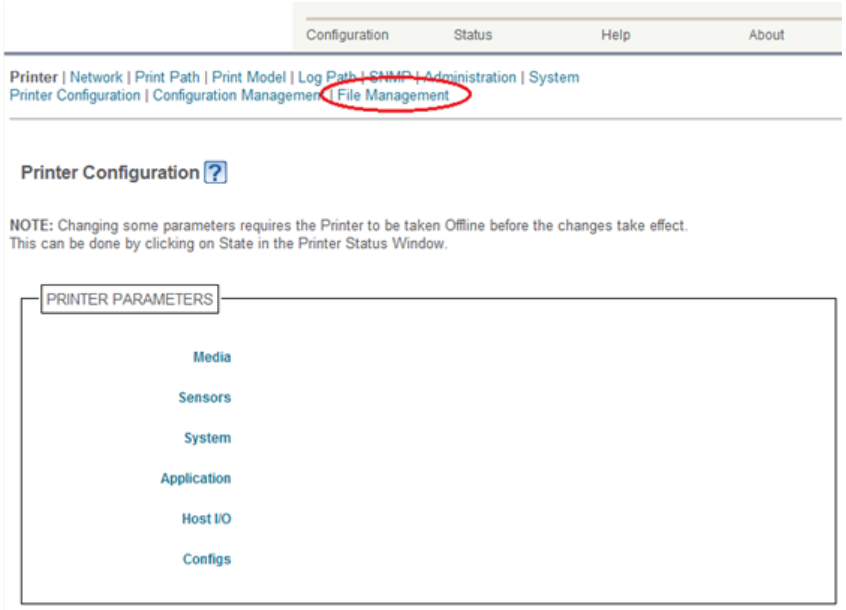

Figure 9 Downloading Files using the File Management Webpage

6. Click “Browse” to navigate the directory and find the download file, then click “Download File”.

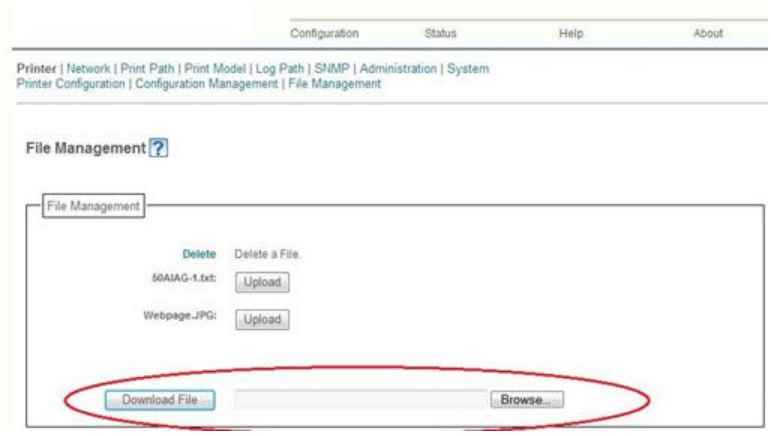

Figure 10 Navigating to Download a File

A notification displays indicating that the web page will refresh upon download completion.

Figure 11 File Download Notification

PTX_SETUP Download

Use PTX_SETUP to load files into the Main File System. Refer to the Appendix section entitled “Command Format” on page 323.

Example loading a font named ARIAL.TTF:

```
!PTX_SETUP
FILE_IO-CAPTURE;“ARIAL.TTF” PTX_END
```

Arial TrueType font binary data.

NOTE: DO NOT add LF/FF to the end of the binary data.

```
!PTX_SETUP
FILE_IO-CAPTURE;”” PTX_END
```

Manual Two-Key Download

1. Download the **PSA File Utility** from our company’s website.
2. Use the utility to open the file to be downloaded and follow the instructions as provided in the Help Section to create the target download file with the appropriate header that will be sent to the printer.

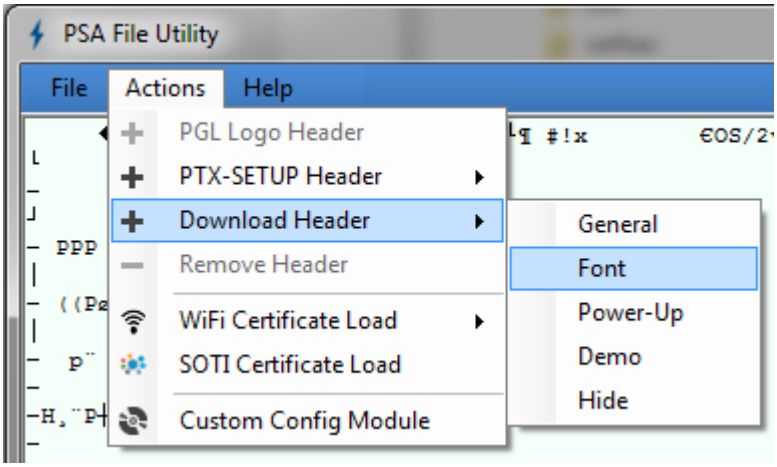

For example, opening the file “Arial.ttf” and creating a Download Header with type Font (as shown above) might create a file “Arial.dwn” that will be sent to the printer in download mode.

3. Place the printer in download mode as described in *Manual Two-Key Download Sequence*.
4. Send the file as described in *Sending Firmware in Download Mode*. Substitute *Arial.dwn* in place of the firmware ***FILENAME.prg***.

5. The process is complete when the file successfully loads into flash and the printer resets.
6. To verify that the file is recognized and downloaded, go to the *System > Flash File View* submenu. One of the files displayed should (in our example) include *Arial.ttf*.

Downloading Files to the SD Card

SD files can be utilized by the printer and certain emulations such as PGL. Since the SD file format is an industry standard, downloading files and fonts to the SD card does not require special facilities within the printer. This allows the user to copy files from their PC or laptop to the SD card as well as copy printer files on the SD card to their PC or laptop.

IMPORTANT **The printer will only locate files stored on the root directory of the SD card. The name of the file within the SD card root directory is the name shown in the SD File System submenu.**

Alternatively, users can copy files from the Main File System to the SD card by using the *System > Flash File Edit > Copy to SD* menu. Users can also copy files from the SD card to the Main File System by using the *System > SD File Edit > Copy from SD* menu.

PGL forms, fonts, and logos can all be read from and stored onto SD cards as described in the *PGL Programmer's Reference Manual*.

IMPORTANT **The SD card must be installed at the time of power-up and cannot be removed until the printer is powered off.**

Using TrueType Fonts

TrueType fonts allow you to customize the look of your forms and labels. You can download TrueType fonts purchased from various sources into your printer. The fonts are available for purchase on websites such as www.fonts.com and www.myfonts.com.

The following sections discuss how to:

- Download TrueType fonts (page 262)
- Select and print downloaded TrueType fonts (page 263)
- Use TrueType fonts to print DBCS using UTF-8 (page 263)

Downloading TrueType Fonts

You can download TrueType fonts to your printer by using any of the following methods:

- *PTX_SETUP Download* (page 261)
- *Web Page Download* (page 259)
- *PGL Emulation* other Emulations (see below)
- *Manual Two-Key Download* (page 263)
- *Labeling Applications* (page 263)

Once a TrueType font is downloaded, it is stored in the Main File System or SD File System as a resident font. Regardless of printer power cycles, the downloaded font will stay in the printer until the user deletes it. The user can find a list of all printer resident fonts within the submenus *System > Flash File View* or *System > SD File View*. User downloaded fonts can be deleted from these same submenus. If within the Main File System, the user is recommended to perform a *System > Flash File Edit > Optimize & Reboot* function.

PGL Emulation

A TrueType font can be loaded by creating a file that appends a PGL command to the font and then sending that file to the printer. Use the PGL FONTLOAD command:

```
~FONTLOAD;FontName;FontSize;Location
```

where

FontName TrueType font name, e.g. arial.ttf

FontSize TrueType font size, e.g. file size for arial.ttf

Location The download location. By default, “DISK” represents the Main File System (Flash), while “EMC” designates the SD card. The PGL menu “Storage Select” can be changed to force “DISK” to store fonts and other PGL elements to the SD card.

Example:

```
~FONTLOAD;arial.ttf;60548;DISK
```

(Insert binary data of arial.ttf here.)

```
END
```

After the file is created, it can be copied to the appropriate printer I/O port

while the printer is ONLINE, similar to other print files.

Example:

copy/b filename.ext lpt1 or LPT1

Manual Two-Key Download

As described previously.

Labeling Applications

A TrueType font can be downloaded through several labeling applications, such as Codesoft, Loftware, and Bartender. Contact the appropriate company for more details.

Select and Print Downloaded TrueType Fonts

After downloading the TrueType font using any of the following methods, you can access the downloaded TrueType font by using the command as described in the *PGL Programmer’s Reference Manual*.

To Print ASCII Characters

You can print characters from your font using the currently selected character set. You can also select a new character set using the ISET command.

Example:

```
~CREATE;FORM
FONT;NAME ARIAL.TTF
ALPHA
10;10;3;3;$01234$
STOP
END
~EXECUTE;FORM;1
```

To Print All Characters

You can print all of the characters in your font using UTF-8. You must have a UTF-8 datastream to print.

Example:

```
~CREATE;FORM
ISET;'UTF8'
FONT;NAME ARIAL.TTF
ALPHA
10;10;3;3;$UTF-8
data$ STOP
END
~EXECUTE;FORM;1
```

Demo Facility

To exercise the function of a Printronix printer in an environment where there is no host computer system available, you may need to execute a demo test file from the menu system. When executed, the demo test file will run through the emulations as if the host computer sent the file. Once completed, it will run the file again until terminated.

This section describes how to download, configure, execute, and terminate the demo. Demo files are treated as other User Flash Files and therefore are preserved across downloads by default.

Downloading a Demo File

1. Download the **PSA File Utility** from our company's website.
2. Use the utility to open the demo file to be downloaded and follow the instructions as provided in the Help Section to create the target demo file with the appropriate header that will be sent to the printer. Start a Windows Command Prompt session.

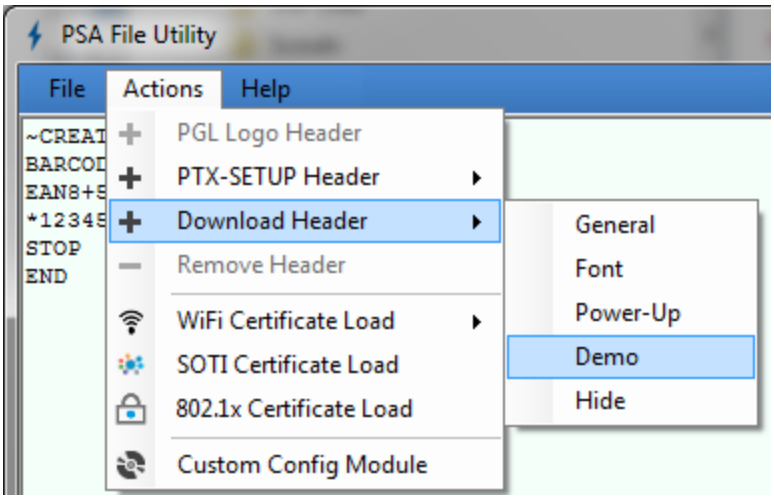

   For example, opening the file "ean8.pgl" and creating a Download Header with type Demo (as shown above) might create a file "ean8.dmo" that will be sent to the printer in download mode.

3. Place the printer in download mode as described in *Manual Two-Key Download Sequence*.
4. Send the file as described in *Sending Firmware in Download Mode* on page 254. Substitute the file **.fls* (e.g., demo.fls) in place of the firmware ***FILENAME.prg***.
5. The process is complete when the file has successfully loaded into flash memory and the printer resets itself.
6. Verify that the file is recognized and downloaded under the *Tools > Print Tests > Run Tests* menu. One of the printer tests shown should include *file_name*.

Configuring the Printer to Run a Demo File

This facility does not attempt to identify which emulation a particular demo file is designed for. The user must configure the printer for the appropriate emulation before invoking the demo. The demo will inherit all menu configuration parameters when executed. The user is responsible to properly configure the forms size, typeface, orientation, etc. This facility will not restore any configuration settings when the demo file is finished printing.

Starting a Demo File

The demo file is initiated by selecting its Flash File name and pressing ENTER within the *Tools* > *Print Tests* > *Run Tests* menu. This causes the printer to go ONLINE and print the demo file. Once the demo file starts, it will repeat automatically until the demo file sequence is stopped.

WARNING **DO NOT run a demo file if the printer is in the middle of another test or host job. This will cause unexpected results. Similarly, do not send host jobs when running demo tests.**

Pausing a Demo File

Pause the demo by placing the printer OFFLINE (press the PAUSE key). To resume printing, go back ONLINE.

Stopping a Demo File

Stop the demo by executing a soft reset on the printer (press the LEFT and RIGHT arrow keys simultaneously). This will resume normal operation.

Deleting a Demo File

Delete demo files similar to any other file in the Main File System. Once deleted, the file will no longer appear as a selection in the *Tools* > *Print Tests* > *Run Tests* menu.

WLAN Radio Firmware Upgrade

There is a radio chip on the WLAN Option Board that contains firmware. This firmware is loaded into radio chip at the factory, but there are occasions when you may have to upgrade this firmware to a newer level.

Firmware Download Methods

Once you have the radio firmware copied onto your local PC USB drive or SD card, you can employ one of the various download methods presented in this section. Downloading firmware can be accomplished through almost any host IO installed on the printer, but may not be valid for all methods.

IMPORTANT **To upgrade the Radio firmware, the WLAN interface must be active. This means that the download file CANNOT be sent to the printer over the Ethernet interface or via the Manual three-key power-up method.**

With exception to the manual two-key power-up sequences, downloading new firmware does not require the user to put the printer into any special mode. This makes the download procedure easy.

Table 11. Firmware Download Methods

Firmware Download Method	File Type(s)
Web Page (WLAN only). User needs the wlan network configured, a browser, and know the IP address.	FILENAME.fls
Automatic download (any host IO except Ethernet). Using the FILENAME.exe, firmware can be downloaded from a Windows Command Prompt without having to manually put the printer into download mode.	FILENAME.exe
Manual two-key (any host IO except Ethernet). This two-key (LEFT SOFT KEY + RIGHT SOFT KEY) power-up sequence puts the printer into download mode. Firmware can be loaded through any host IO port except Ethernet.	FILENAME.fls FILENAME.exe
Manual two-key download (USB or SD Card). This two-key (LEFT SOFT KEY + RIGHT SOFT KEY) power-up sequence puts the printer into download mode. Firmware program file (.prg) must be copied to the USB drive or SD card and renamed "UPGRADE".	FILENAME.fls renamed to "UPGRADE"
PrintNet Enterprise (WLAN only). User must install the PrintNet Enterprise application from the website. This is the most versatile and powerful method to upgrade printers but also requires that your computer can run Java™ programs.	For a detailed description, refer to the *PrintNet Ethernet User's Manual*.

The methods shown above are the same procedures as downloading firmware shown earlier in this chapter. Simply substitute FILENAME.fls for FILENAME.prg.

5 *Reprogramming the Security Key*

Reprogramming the Security Key

The security key on the controller board can be reprogrammed with a Software Program Exchange (SPX) module. The SPX is an intelligent module that plugs into the debug port on the back of the T6000e. The SPX is used only once; it automatically overwrites itself after successfully reprogramming a security key. This allows the end user or a service technician to enable features such as new emulations without having to remove covers and install a new security key on the controller board.

The SPX is used at power-up only and is not left in the printer during normal operation. Because it is a single-use disposable item the user is not required to return it to the vendor or manufacturer.

How to Program the Security Key

1. Power off the printer.
2. Refer to *Figure 12* to locate the debug port at the rear of the printer.
3. Insert the SPX into the debug port as shown.

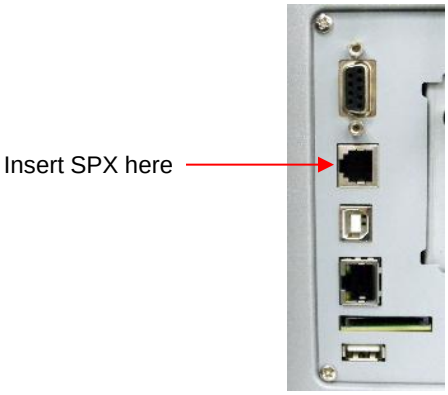

Figure 12 Inserting The SPX into the Debug Port

4. Power on the printer. The printer will begin its boot-up sequence.
5. When the printer detects a valid SPX, the control panel displays:

   "NEW SPX DETECTED

   PRESS ENTER"

   NOTE: If an error message displays, find the message in the Message List in *Chapter* 6 page 269 and follow the troubleshooting instructions.

6. Press the **ENTER** key to activate the reprogramming sequence. The display will read:

   PROGRAMMING. PLEASE WAIT."

7. When the security key is reprogrammed, the display will read:

   “UPGRADED - REMOVE SPX

   Downld code if needed”

8. Remove the SPX from the debug port at the rear of the printer.
9. Press the **ENTER** key. The printer will reboot automatically and you may resume normal printing.
10. You may need to download a new program file to use the new feature.
11. You may need to set additional menu parameters for any new features that have been added or enabled.

6 Diagnostics and Troubleshooting

Printer Tests

A sequence of automatic tests is performed during printer power-up. If any faults are detected at that time, a fault message will display.

Before placing the printer in its operating environment, run test patterns to ensure proper operation and print quality. The printer has a number of tests which allow you to check for proper printer operation and print quality.

You can invoke the various test patterns from the *Tools > Print Tests* menu. For more information, see

Tools on page 236.

Troubleshooting Common Situations

Occasionally, situations occur that require some troubleshooting skill. Possible problem situations and potential solutions are listed in this section. While not every conceivable situation is addressed here, you may find some of these tips helpful. Contact a qualified service technician for problems that persist or are not covered in this section.

Interfacing

The printer will not function properly with an incorrectly wired cable or the wrong interface cable installed. If the cable is suspect, contact Printronix or your authorized service representative.

When the printer is first powered up, it will reset itself to the communication default parameters. The parameters are listed in the following table:

PARAMETER	DEFAULT
Baud	9600
Data Bits	8
Parity	NONE
Stop Bits	1

The printer interface configuration settings may be entered from the control panel. See *Chapter* 3, Configurations on page 56 for complete instructions.

Hex Dump Mode

Hex dump mode allows you to place the printer into a diagnostic mode in which the printer outputs a hexadecimal data stream on the label for examination. The purpose of hex dump mode is to see exactly what data is received by the printer, in order to debug forms.

When enabled, the hex dump mode translates all host interface data to its hexadecimal equivalent, then prints the hex code and its printable symbol, if one exists. *Figure 13* shows a partial example of a hex dump.

After the printer enters hex dump mode, all characters it prints (including any in the printer's input buffer) are printed in two forms: as a two-symbol hexadecimal code and as the character's printable symbol (if it has one). A non-printable code is printed as a period [.] symbol. Up to 16 characters can be printed per line of hex dump printout. While the printer is in hex dump mode, it does not act upon any control codes, other than to print their hexadecimal equivalents.

The 16 characters printed per line on the hex dump are formatted so that the 16 printable symbols are printed in columns 1 through 16. The 17th column is blank. Column 18 contains either a p (PI line active) or a blank (PI not active). Columns 19 and 20 contain the hexadecimal code for the first character, followed by a blank. The PI line condition and hexadecimal code for the second character are printed in columns 22, 23, and 24, followed by a blank. The third through 16th characters are printed in a similar manner. The hexadecimal code for the 16th character is printed in columns 78, 79, and 80.

NOTE: Values will vary based on printhead width.

Subsequent printing observes the current setting for skip-over perforation, form length, and top-of-form position parameters.

IMPORTANT **You must have a minimum of 4.1 inches of media installed and have *Media > Image > Label Width* set to 4.1 inches. If not, the hex dump data will be truncated and lost.**

If a fault occurs while printing a hex dump, the printer reverts to the normal fault state. When the fault is cleared, the printer resumes printing the hex dump (either a partial line with a form feed or nothing at all). Top-of-Form remains unaffected.

```
.The Impact Prin  09 54 68 65 20 49 6D 70 61 63 74 20 50 72 69 6E
ter Emulation pr  74 65 72 20 45 6D 75 6C 61 74 69 6F 6E 20 70 72
ints in one-up..  69 6E 74 73 20 69 6E 20 6F 6E 65 2D 75 70 2C 0A
.two-up, and fou  09 74 77 6F 2D 75 70 2C 20 61 6E 64 20 66 6F 75
r up page window  72 20 75 70 20 70 61 67 65 20 77 69 6E 64 6F 77
s....             73 2E 0C 0D 0A
```

Figure 13 Sample Hex Dump

To begin a hex dump, first place the printer OFFLINE and enable the Hex Dump Mode option from the control panel:

- Enable the *Tools > Diagnostics > Hex Dump Mode* menu.
- For IPDS jobs, enable *Application > IPDS Setup > Hexdump Mode* menu.

Next, place the printer back ONLINE and send data to the printer from the host computer. Any data received from the host is “dumped” to the printout.

To cancel a hex dump, first place the printer OFFLINE and disable the menu(s) affected. The paper may then be advanced to the next Top-of-Form.

Controlling Print Quality

Three factors have the greatest effect on print quality:

- The amount of heat applied by the printhead (print intensity)
- The speed at which media is moving under the printhead (print speed)
- The amount of printhead pressure.

For example, low-cost direct thermal media often has very high reaction temperatures, which means that it takes a great deal of heat to make a clear image. Resin ribbons and film media may require higher print intensity for a quality image.

The printer provides different ways to increase the heat:

- Running the printer slower by changing the print speed via the host or the *Media* > *Speed* menu.
- Setting the print intensity to a higher value with the Print Intensity function, accessed via the host or through the *Media* > *Image* menu. This causes more heat to be transferred into the media, thereby generating a darker image.
- The print intensity can be adjusted even higher with the Intensity Shift function, accessed through the *Media* > *Image* menu allowing the actual setting to reach a maximum of 20.

Proper printhead pressure adjustment will affect print quality. To adjust pressure, rotate the printhead pressure adjustment dial (see *Figure 14*). For more information, refer to *Printhead Pressure Adjustment* on page 41

Also, the printhead should be cleaned frequently to ensure that foreign material does not accumulate on the printhead and interfere with heat transfer. If smears, voids, or white lines appear in the printed form, the printhead should be cleaned with a printhead cleaning pen (see *Figure 14*).

The cleaning should be done as a matter of routine whenever you install a new ribbon (thermal transfer mode) or when you install new media (direct thermal mode).

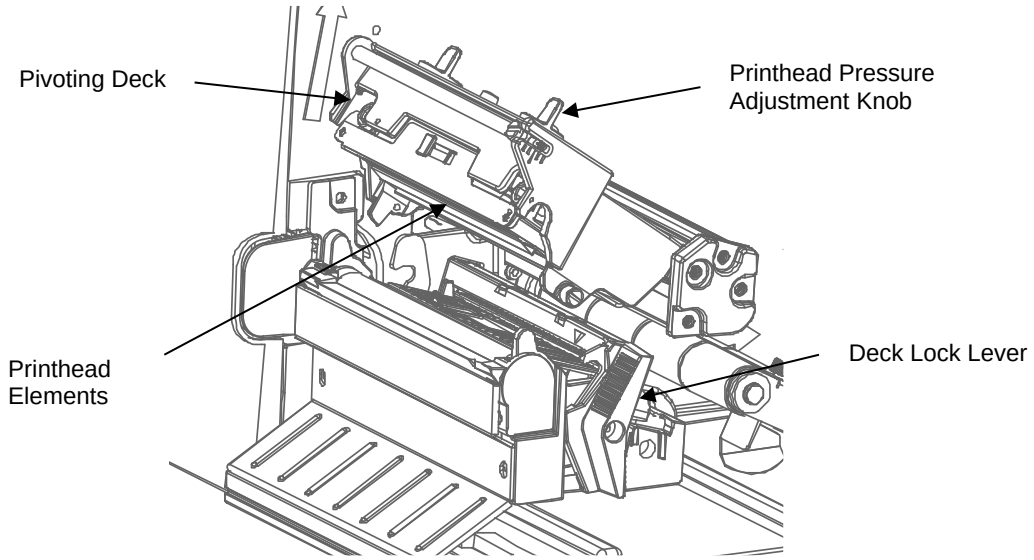

Figure 14 Cleaning the Printhead Determining Printhead Wear

The most common signs of a worn printhead are fixed vertical streaks that are always the same size and in the same place on the printout. To determine if vertical streaks are caused by a worn printhead, follow these methods:

1. Clean the printhead thoroughly with the printhead cleaning pen. Test again for vertical streaks.
2. Remove the printhead (see *Replacing the Printhead* page 272) and examine it for contamination or damage such as scratches, dents, or other marks on the light brown area containing the heating elements. Clean and install it, then test again for vertical streaks.
3. Load an alternate roll of media. Test again for vertical streaks.
4. Load an alternate roll of ribbon. Test again for vertical streaks.

If after performing all these tests you still see fixed vertical streaks, you must replace the printhead.

Replacing the Printhead

1. Set the printer power switch to O (Off).

WARNING **Always unplug the printer power cord from the printer or power outlet before doing any installation procedure. Failure to remove power could result in injury to you and damage the equipment. When applicable, you will be instructed to apply power.**

2. Unplug the printer power cord from the printer or the AC power source.
3. Remove the ribbon and media (e.g., paper, label, or tag stock material).

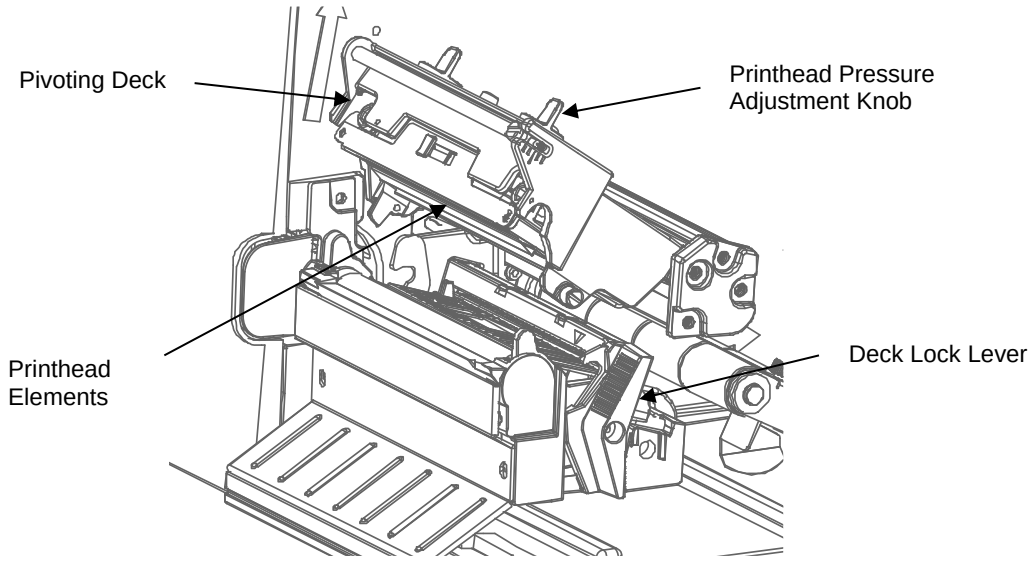

Figure 15 Opening the Pivoting Deck

CAUTION **Oils from your hands can damage the light brown area (heating elements) of the printhead. Do not touch the light brown area when you handle the printhead assembly.**

4. Open the pivoting deck by pushing the deck lock lever until the deck swings upward.

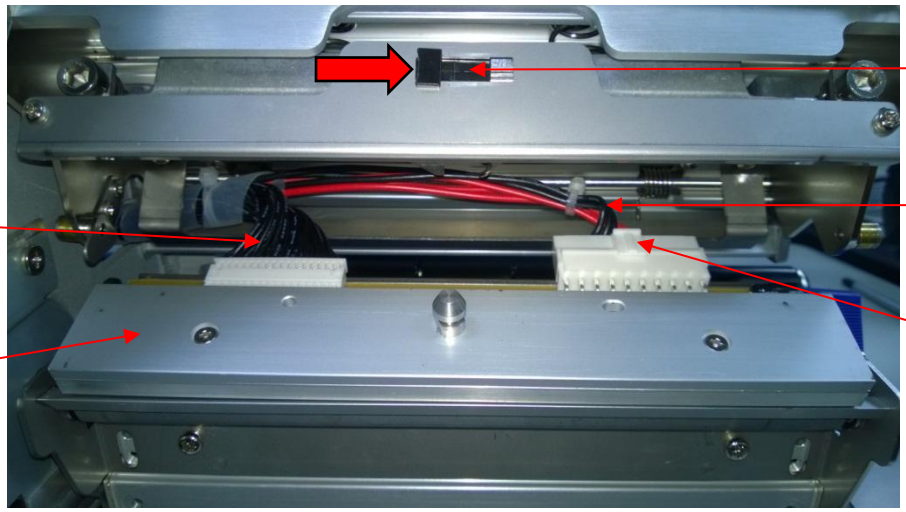

Figure 16 Replacing the Printhead Assembly

CAUTION **To prevent electrostatic damage to electronic components, ground yourself by touching an unpainted part of the printer frame before handling and installing the printhead.**

5. Touch an unpainted part of the printer frame before touching the printhead.
6. Push the printhead assembly release tab to right side to release the printhead assembly.
7. Push the release tab down on the power supply cable assembly and remove the cable from the printhead assembly.
8. Use the pull-tab to remove the printhead controller cable assembly from the printhead assembly.
9. Position the new printhead assembly below the pivoting deck and connect the printhead controller and power supply cable assemblies.
10. Slide the printhead assembly upward into the pivoting deck until the retainer clips snap it in place. Make sure that the cable assemblies do not into the media or ribbon path.

Restore the Printer to Operation

1. Inspect the light brown area of the printhead for smudges or fingerprints. If necessary, gently clean the light brown area with a soft, lint-free cloth (or a cotton swab) moistened with isopropyl alcohol, or use a Cleaning Pen (P/N 203502-001).
2. Install the ribbon and media (e.g., paper, label, or tag stock material).
3. Close the pivoting deck and rotate the deck lock lever fully counterclockwise. (*Figure 15*.)
4. Close the media cover.
5. Plug the AC power cord into the printer and the power source.
6. Verify the Printhead statistics from the ONLINE menu screen (the Printhead Gauge should show 100%).
7. Test printer operation and check print quality by selecting the *Tools* > *Print Tests* section and printing one of the test patterns. (Refer to *Tools* on page 236).

Diagnostics for Fatal Error:

If the printer stalls with an LCD message that starts with “Fatal Error:”, reboot the printer and continue. If this situation persists, invoke the diagnostic **Auto Dump** that will capture the failure dump in a flash file that can be later uploaded from PrintNet Enterprise Suite or SD memory card and sent to Printronix Customer Support Center (see *Printronix Auto ID Customer* Support Center *page* 349) for further analysis.

This diagnostic option must be enabled for the printer to capture the information. To perform this diagnostic do the following the procedure:

1. Enable the *Tools* > *Diagnostics* > *Auto Dump option*.
2. When the failure happens, reboot the printer and wait for it to power up again.
3. Under *System* > *Flash File View*, check to see if files ‘autodmp1’ or ‘autodmp2’ are present.
4. If present, use PrintNet Enterprise Suite to upload these files to your host computer. Alternatively, use the function *System* > *Flash File Edit* > *Copy to SD* to copy the file onto an SD memory card.
5. Contact Printronix Customer Support Center and send them the files and the printer’s configuration printout. Refer to the *PrintNet Enterprise Suite User’s Manual* for instructions to accomplish these tasks.

Solving other Printer Problems

Table 12. Printer Problems and Solutions

Symptom	Solution/Explanation
Communications Failures.	1. Check the interface cable. 2. Check the configuration to ensure the correct interface is enabled. 3. Verify the printer is receiving data by watching for "Receiving Data" messages in the ONLINE screen of the control panel.
CONTROL PANEL	
LCD shows ONLINE and the printer appears to be working, but nothing is printing.	1. Verify that the Active IGP Emulation shown on the control panel matches the emulation data sent to the printer. 2. Verify that the SFCC selection(s) in the APPLICATION section of the menu match the SFCC utilized within the emulation data that is sent to the printer. 3. Verify that the labels are the correct type (direct or thermal transfer). 4. If using direct thermal media, check that the media is loaded with the direct thermal side facing up. 5. Check that the transfer ribbon is correctly routed. Route transfer ribbon with ink side down as it passes under the printhead. 6. Check that the printhead assembly is properly closed by making sure the printhead latch is fully engaged. 7. Verify that the ribbon and media are compatible; incompatibility can cause extremely light printing. Match the ribbon to the type of media being used. 8. Check the used sections of ribbon for a printed image. Often times when ribbon and media are incompatible, the image can be seen on the ribbon but it will not transfer to the media. 9. Check that the Print Intensity is correct. Set the Print Intensity in the *Media* > *Image* section or via the host software. 10. Check that the Label Width parameter value does not exceed the width of the media installed. Set the Label Width in *Media* > *Image* > *Label Width*. 11. Run the Checkerboard test print pattern from the *Tools* > *Print Tests* menu. **NOTE:** Any imbalance of the print on the page. The printhead pressure may need adjustment. 12. Remove the printhead completely and re-install it ensuring the cables are correctly seated.

Table 12. Printer Problems and Solutions

Symptom	Solution/Explanation
LCD shows ONLINE and the printer appears to be working, but nothing prints and “Invalid Data” displays in the message area.	This message informs the user that the printer has received data, but no valid commands were found. This typically occurs when an incorrect Active IGP Emulation or SFCC was selected. This message will continue to display until new data is received or when the printer is put OFFLINE. 1. If the emulation and SFCC are correct, additional diagnostic information can be obtained by selecting the desired option under the “xxx Diagnostics” menu, found in the *Application* > *Control* section. 2. After selecting the desired option, run the job again to obtain the additional diagnostic information.
ONLINE status indicator is flashing.	1. Check the LCD for a specific fault message. Press the PAUSE key, and if a fault message displays, refer to the *LCD Message Troubleshooting* table on page 284. 2. Check for an Out-of-Media condition or missing labels in the middle of a roll. Load the correct media. 3. Check that the ribbon and label stock are correctly routed. Load ribbon and label stock correctly.
POWER FAILURES	
Printer fails to turn on, and the display is not backlit.	1. Check that the printer AC power cord is correctly attached to the printer and to the AC power outlet. 2. Have a qualified electrician test the AC wall outlet for the correct power range. Locate the printer in an area that has the correct power range. 3. Check the AC power cord. Replace a damaged AC power cord or one that you suspect may be bad. 4. Call your authorized service representative.
PRINT QUALITY	
• Label(s) did not get printed within a multi label print job. • A portion of the printed image was clipped off and the beginning of the next label was printed on the same physical label.	1. If the serial interface is being used, verify that the correct serial data protocol is selected to match the host interface protocol. 2. If *Media* > *Image* > *Clip Page* = Enable, the printer may have falsely detected a gap, hole, or black mark and then clipped (discarded) the remaining printable data for the label. To fix this: a. Perform Auto Calibrate. See *Running Auto Calibrate* page 48. b. Decrease *Sensors* > *Control* > *Gap/Mark Threshold* value by 2 or 3 increments. See *Gap/Mark Thresh* on page 88. c. Set *Media* > *Image* > *Clip Page* to Disable and *Media* > *Image* > *Label Length* to correct physical length value. See *Intro: Clip Page* on page 66.

Table 12. Printer Problems and Solutions

Symptom	Solution/Explanation
Media moves, but no image prints in ONLINE mode.	1. Make sure the J402 power supply cable has a good connection to the right side of the printhead. 2. Place the printer OFFLINE and print the Checkerboard diagnostic test pattern in *Tools* > *Print Tests* section. If the pattern prints, there is a communication problem between the host computer and the printer.
Media moves, but no image prints in Direct Thermal mode.	1. Media is not the type for direct thermal printing. Install direct thermal media. 2. Direct thermal media is installed wrong side up. Reinstall the media with the correct side facing the printhead.
Media and ribbon move, but no image prints in Thermal Transfer mode.	1. Print the Checkerboard diagnostic test pattern and check that the image appears on the used portion of ribbon. If the image is on the ribbon, the ribbon may be installed with the transfer side against the printhead, instead of against the media. 2. The ribbon may be designed for another model printer. 3. The ribbon may not be compatible with the media.
When narrow media is installed, the media moves but no image prints.	Verify the *Media* > *Image* > *Label Width* value agrees with the width of the installed media. Too large a value will start the image too far to the right and off the media.
Printing is faded or of poor quality.	1. Clean the printhead. 2. Check that both latches on the pivoting deck are closed and latched. Close the printhead by pressing down on both sides of the pivoting deck and rotating the deck lock lever fully counterclockwise. 3. Verify that the head pressure adjustment dial is properly set. Try increasing the pressure. 4. Verify that the Print Speed and Print Intensity values are correct. Adjust Print Speed and Print Intensity in the *Media* > *Speed* and *Media* > *Image* sections, respectively, or via host software.
Print is light on the left or right side of the label.	Check if the pressure is set for the width of the media being used. Even the pressure near the edge of the media.

Table 12. Printer Problems and Solutions

Symptom	Solution/Explanation
Prints strange characters instead of the correct label format.	1. If the printer serial interface is being used, check that the printer serial baud rate setting matches the baud rate of the host computer. Reset the printer via software, or turn the printer off and then on. 2. Check if the printer serial host interface is set for 8 data bits but the transmitting device is set for 7 data bits (or vice-versa). Check the current setting by viewing it on the LCD, and use the *Host IO* > *Serial* section to adjust the settings, if necessary. 3. If the printer parallel interface is being used, make sure the parallel interface terminating resistors are correct for the host computer drivers.
• Start of image is printed an erroneous distance from the top-of-form. • The printer starts to print one label and then another, all within the same physical label.	1. Make sure the *Media* > *Image* > *Label Length* value matches the actual physical length of the label installed and the run on Auto Calibrate (see *Running Auto Calibrate* page 48). These symptoms could be caused by: • Severely curled labels near the end of a media roll • Media sensor triggering off of a dark, preprinted image on the label • Multiple gaps within the physical label. 2. Set *Media Image* > *Clip Page* to Disable. 3. Run a Media Profile (see *Running Media Profile* page 49). 4. If the Media Profile printout shows that preprinted images has an amplitude approaching the Gap/Mark Threshold level, position the lower media sensor to avoid the image or increase the Threshold Range percent value in the *Sensors* > *Calibrate* section. Run Auto Calibrate again and Media Profile to verify there is an improvement.
• Loss of one or more serialized labels within a print job. • Start of image is printed in the middle of the gap. • The top part of the image is lost when printing with Head First orientation selected.	1. Go to the *Sensors* > *Calibrate* section. 2. Set Gap Windowing to Enable. 3. Set Gap Length to equal the physical gap length of the media installed. The range is 0.05 to 1.00 inches. The likely cause of these symptoms is that *Media Image* >*Clip Page* = Enable and a cross-perforation, radical fold or flaw in the liner has caused the media sensor to detect this as the leading edge (TOF) of the new label or end of label (EOF), or both.

Table 12. Printer Problems and Solutions

Symptom	Solution/Explanation
Smears or voids in printed image.	1. Clean the printhead. 2. Make sure the printhead temperature (Print Intensity) is not too high. Change the Print Intensity value in the *Media > Image* section. 3. Verify that the printhead pressure is setup correctly to match the media width installed. (See *Printhead Pressure Adjustment* on page 41). 4. Make sure the printhead pressure dial is set properly for the media thickness installed. 5. Skin oils can adhere to the surface of label stock, causing fingerprints which inhibit thermal transfer. Wipe label stock with a cloth, or remove a few feet of labels to expose a clean area. Handle labels by the edges. 6. Check that the media has not been mishandled before or during installation in the printer. Soiled media or media with fingerprints will prevent proper ribbon transfer. 7. Check that media has not been installed inside out. Surfaces on both sides may look identical but can produce big differences in print quality. 8. Make sure the correct ribbon and media combination are being used. Use the correct ribbon type. 9. Check the ribbon for creases or folds across its surface. Smooth out the ribbon to remove any creases. 10. Reduce the Print Speed value through the *Media > Speed* section, or via host software. 11. If using ribbon (Transfer Print mode), do not use direct thermal media.

Table 11. Printer Problems and Solutions

Symptom	Solution/Explanation
PRINTER OPERATION	
Advances several labels when FEED key is pressed.	1. Check that labels are loaded correctly. 2. Check that the *Media > Image > Label Length* (or sent by the host computer) agrees with the length of the media installed. Although gaps, holes, notches, or black marks are used to establish the Top-of-Form position, a larger page length will override the gap and skip a page or more if *Media > Image > Clip Page* is set to Disable. Set Label Length to match the media being used. 3. Check that the printer is optimized to detect the type of media installed. Perform Auto Calibrate for gapped and black mark media. (See *Running Auto Calibrate* page *48*) 4. Adjust the media sensor horizontally to detect gaps, holes, notches, or narrow width black marks. (See *Positioning the Media Sensors* on page 45.) 5. If the problem persists, run the Media Profile printout to see if the label length indicators are being sensed. 6. Run Manual Calibrate. (See *Running Manual Calibrate* page 52.)

Table 11. Printer Problems and Solutions

Symptom	Solution/Explanation
Label wraps around the platen roller.	1. Open the pivoting deck by rotating the blue deck lock lever clockwise and then open the front door and loosen the two thumbscrews for better platen access. 2. Remove the wrapped label by slowly pulling and unwrapping it from the platen. **NOTE:** Even though power is removed from the platen motor, some drag will be felt as the platen rotates. **CAUTION** **Never use a sharp object against the platen as cuts and gouges in the platen may cause voids in the printed image and require platen replacement.** 3. When the entire label is removed from the platen, then use a Genuine Printronix Auto ID isopropyl alcohol wipe, to remove all the adhesive from the platen to help prevent any future label wraps. Tighten the printer front door thumbscrews. 4. A label wrap occurs when a die cut label is incorrectly torn at the tear bar by the user and adhesive is exposed under the leading edge of the next label. When the printer pulls this next label back to TOF, the adhesive contacts the platen and when the label advances forward during printing or a Form Feed, it wraps around the platen. 5. Label wraps can be avoided by having the user practice careful tear off techniques and ensuring that the label across perforations are ideally positioned at the tear bar edge by using the correct *Media > Image > Paper Feed Shift* value.
Pivoting deck is difficult to close and lock when heavy tag stock media is installed.	1. Set the printhead pressure adjustment dial to the MIN position. 2. Close the pivoting deck and lock the deck lock lever. 3. Position the printhead pressure adjustment dial to the desired head pressure setting.
Print is too small or too large.	Ensure the proper printhead is installed (203 or 300 dpi).

Table 11. Printer Problems and Solutions

Symptom	Solution/Explanation
• Print quality is good, but the printer skips every other label. • An occasional blank label occurs within a print job, but no labels are lost.	1. Make sure that the label is not formatted too close to the top edge of the form. Leave white space equal to eight dot rows at the top of the label. 300 dpi = .0264 inches. 203 dpi = .04 inches. 2. Check that *Media* > *Image* > *Clip Page* = Enable. Clip Page = Enable causes any printable data to be clipped off and lost once the next TOF position (transmissive gap, notch, hole, or reflective mark) is detected. Clip Page = Disable allows the printer to ignore a gap or mark. The printer looks for the gap or mark after the specified Label Length is first reached.
RIBBON	
Printer advances media, but the ribbon does not advance.	1. Make sure the ribbon is installed correctly. 2. A poor ribbon/media combination can cause insufficient friction between the media and ribbon. Verify that the correct ribbon and media are being used. 3. The printhead pressure may not be set high enough. Set the pressure higher. 4. There may be adhesive on the printhead. Clean the printhead. 5. Verify that *Media* > *Handling* > *Print Mode* menu is set for Transfer and not Direct Thermal.
Printer cuts (melts) through the transfer ribbon.	1. Verify that Print Intensity is set to the proper level in the *Media* > *Image* section. 2. Verify that *Media* > *Handling* > *Print Mode* menu is set for Transfer and not Direct Thermal.
Printing stops and the ONLINE status indicator flashes.	1. Check that the media sensor is clean and undamaged. 2. Check that the gap between the bottom of a label and the top of the next label is at least 0.100 inch. Use only labels and tag stock approved for this printer. 3. Inspect for a jammed label. Remove the jammed label. 4. Check that the transfer ribbon and label stock are routed correctly.

Printer Alarms

The printer has built-in alarms that monitor printer status and media stock conditions. Alarm messages display indicating the present status of the printer and media stock levels. The alarms also indicate if the printer electronics detect an error condition.

Fault Messages

If a fault condition occurs in the printer, the status indicator on the control panel flashes on and off and the message display indicates the specific fault. Fault messages are summarized in *Table 14*.

Displayed faults fall into one of two categories:

- Operator correctable
- Field service required

Operator-Correctable Fault Messages

For the operator-correctable faults, follow the suggested corrective action under the solution section of the table. After correcting the displayed fault, press the PAUSE key to clear the error message and status indicator and resume printing. Some faults require the user to go ONLINE to clear. If the fault message reappears, power off the printer and wait 15 seconds before powering on the printer again. If the error condition persists, contact your authorized service representative.

Fault Messages Requiring Field Service Attention

If a fault is not correctable by the operator, the fault message is followed by an asterisk (*). This usually indicates that an authorized service representative is needed. You should try two steps to clear the fault before calling your authorized service representative:

1. Set the printer power switch to O (off), wait 15 seconds, then turn the printer on again. Run your print job again. If the message does not appear, it was a false indication and no further attention is required.
2. If the message reappears, press the PAUSE key. If the message goes away, it was a false indication and no further attention is required. If the message reappears, call your authorized service representative.

Fatal Messages Requiring Firmware Upgrade or Diagnostics

Some faults are generated by the software when a fatal error occurs that is not recoverable. These faults are prefixed with “Fatal Error:” and are the result of a software algorithm failure. When these faults occur, the following steps are recommended:

1. Cycle Power. Run the print job again. If the message appears, load the latest firmware.
2. Cycle power. Run the print job again. If the message appears, record the display message and follow the instructions for *Diagnostics for Fatal Error:* page 274.
3. Contact your authorized customer service representative.

Table 13. LCD Message Troubleshooting

Displayed Message	Solution/Explanation
1284 OPTION CARD PROGRAM FAILED ---------- PRESS KEY TO CONTINUE	Status message indicating that the IEEE1284 option card FPGA failed to program. 1. Pressing any key on the panel will cause the printer to continue boot-up with the previous FPGA configuration. No action is required.
1284 OPTION CARD PROGRAM COMPLETE ---------- RESUMING BOOT_UP	Status message indicating that the IEEE1284 option card FPGA was successfully programmed. No action is required.
48V POWER FAIL	+48 VDC: an internal power failure. 1. Power off the printer for 15 seconds, then power back on. 2. If the problem persists, contact your authorized customer service representative.
BAD VFU CHANNEL	The application tried to use an undefined VFU channel. 1. Change the application to use defined channels.
BAR CODE IMPROPER Data Format	Data validation error: the bar code is not properly encoded. For example, a check sum is incorrect, a required number of characters are not found, or the required terminator characters are not included. This problem is almost always caused by incorrect form or host application design. 1. Fix the application so it sends correct bar code format.

Table 13. LCD Message Troubleshooting

Displayed Message	Solution/Explanation
BAR CODE QUIET Zone too small	Data validation error: the blank zone(s) left or right of the bar code is not big enough to meet the minimum requirement. Typically, this occurs in forms where bar codes are placed too close to other elements, the bar code is too close to an edge of the media, or the media's position is shifting. The minimum quiet zone on each end of the bar code should be ten times the minimum element width or 1/4 inch, whichever is greater. In addition, between bar codes, the validator requires a minimum distance of 20 times the minimum element width or 1/2 inch, whichever is greater. 1. Fix application. 2. Disable Quiet Zone in the VALIDATOR menu.
BUFFER OVERFLOW	Host sent data after the printer buffer was full (serial interface). 1. Verify that the printer matches the host serial interface configuration settings for Data Protocol, Baud Rate, Data Bits, Stop Bits, Parity, Data Terminal Ready, and Request to Send. 2. Set printer serial interface parameters to match those of the host.
BUFFER OVERRUN	Receive overrun (serial interface). 1. Verify that the printer matches the host serial interface configuration settings for Data Protocol, Baud Rate, Data Bits, Stop Bits, Parity, Data Terminal Ready, and Request to Send. 2. Set printer serial interface parameters to match those of the host.
CALIBRATION FAIL	Calibration values derived from Manual Calibrate were not acceptable. 1. Run Manual Calibrate again.
CANNOT CALIBRATE Disable Peel-Off	Calibrate was attempted with Peel-Off Media Handling selected. **NOTE:** You can perform Auto Calibrate in Peel-Off mode if Cal in Peel Mode = Enable. Be prepared to catch labels during Auto Calibrate. 1. Select another option in the *Media* > *Handling* > *Media Handling* menu. 2. Enable *Sensors* > *Calibrate* > *Cal in Peel Mode*.

Table 13. LCD Message Troubleshooting

Displayed Message	Solution/Explanation
CHECKSUM ERROR FLUSHING QUEUES	The printer received the complete program but the checksum did not match. The data may have been corrupted during download. 1. Power off the printer for 15 seconds, then power back on. 2. If the problem persists, contact your authorized customer service representative.
Checksum Failure	The validator detected that the barcode fails checksum or is missing the checksum digit. Verify that the checksum digit exists in the barcode and that it is the correct value.
CONTRAST TOO LOW Check media	Data validation error: the contrast between bars and spaces is not sufficient. This can be caused by too little heat in the thermal transfer or by use of colored media or ribbons. 1. Increase *Media > Image > Print Intensity* or reduce *Media > Speed > Print Speed* in the menu or via host software. 2. Change media (another option). 3. Set Symbol Contrast = 0% (to disable it) in the VALIDATOR menu.
CUTTER FAULT Jam or Cut Fail	• Cutter assembly is not in the closed position. • Cutter option was not able to complete a full cut cycle due to a jam. • Cutter PCBA detected current overload and opened circuit breaker on cutter PCBA. 1. Place the cutter assembly in the closed (up) position. 2. Clear obstruction from the cutter assembly. 3. Insure media thickness is within specification. 4. Wait a few minutes for the cutter circuit breaker to automatically reset. 5. Press PAUSE to clear the fault message and resume
Diagnostic Entry: Power-up Key Request Debugger CD Command Debugger HALT Command	Diagnostic mode was entered from a special key sequence or the debugger. No action required.

Table 13. LCD Message Troubleshooting

Displayed Message	Solution/Explanation
DIRECT THERMAL Remove Ribbon	This is the normal reminder message when you change the *Media* > *Handling* > *Print Mode* setting from Transfer to Direct. 1. Remove ribbon from the ribbon supply and ribbon take-up spindles in the printer. 2. If ribbon is required for printing, change the Print Mode back to Transfer.
ERROR: DC PROGRAM NOT VALID	The printer cannot find the data controller program or the validation checksum is corrupt. 1. Power off the printer for 15 seconds, then power back on. 2. Download the emulation software again. 3. If the problem persists, contact your authorized customer service representative.
ERROR: IPDS needs 300 DPI Head	The printer has detected a 203 DPI printhead installed with IPDS software downloaded. IPDS software only supports the 300 DPI printhead. 1. Power off the printer and replace the 203 DPI printhead with a 300 DPI printhead.
ERROR: PROGRAM NOT COMPATIBLE	The printer is not compatible with the downloaded program. 1. Power off the printer for 15 seconds, then power back on. 2. If the problem persists, contact your authorized customer service representative.
ERROR: PROGRAM NOT VALID	The printer does not see a program in flash memory. 1. Power off the printer for 15 seconds, then power back on. 2. If the problem persists, contact your authorized customer service representative.

Table 13. LCD Message Troubleshooting

Displayed Message	Solution/Explanation

SECURITY KEY NOT DETECTED #	The security key is not present or has failed.
	1. Power off the printer for 15 seconds, then power back on.
	2. If the problem persists, contact your authorized customer service representative.
	NOTE:
	# represents source of the error where:
	1 = Failure during 3 button download
	2 = Failure during 2 button download
	3 = Failure during power up

ERROR OCCURRED FLUSHING QUEUES	An interim message displays while the printer discards host data it cannot use because a fault condition exists. While this message displays, the asterisk (*) rotates. Wait. When the asterisk (*) stops rotating, a different fault message will appear; troubleshoot the final message. Contact your authorized customer service representative
FATAL ERROR xxxx	A fatal software error has occurred. 1. Cycle Power. Run the print job again. If the message appears, load the latest firmware. 2. Run the print job again. If the message appears, record the display message and follow the instructions for *Diagnostics for Fatal Error:* page 274. 3. Contact your authorized customer service representative.
FILE EXISTS Enable Overwrite	The printer operator tried to save a file using the name of an existing stored file. 1. Enter the *System* > *Flash File Edit* menu and enable the Overwrite Files feature to overwrite the existing file.
FILE SYS FULL Delete Files	Insufficient flash memory available to store file. Given there is 512MB of Flash Memory, this error is still possible but unlikely. 1. Go to the *System* > *Flash File Edit* section of the menu. 2. Check the amount of flash memory that can be optimized from the “Flash Reclaimable” menu. 3. If this value is small, then use “Delete Files” to delete unwanted files. 4. If this value is large, then run “Optimize & Reboot”.

Table 13. LCD Message Troubleshooting

Displayed Message	Solution/Explanation
FILE SYS FULL Optimize&Reboot	File system not detected or flash was corrupted. 1. Run the *System > Flash File Edit > Optimize & Reboot* feature.
FILE SYS INVALID Optimize&Reboot	The file system was given an invalid request. 1. Run the *System > Flash File Edit > Optimize & Reboot* feature.
FILE SYS WRITE Check Flash	Problem writing to flash memory. 1. Power off the printer for 15 seconds, then power back on. If the problem persists, contact your authorized customer service representative.
FILE UPLOADING Please Wait	File is uploading to PNE. 1. Wait for upload completion before accessing printer front panel.
FPGA FILE NOT FOUND	The program file was not downloaded successfully. 1. Download the program file again. 2. If the message reappears, contact your authorized customer service representative.
FRAMING ERROR	Serial framing error over a serial interface. 1. Match the serial interface settings of the printer to those of the host computer.
GAP NOT DETECTED	• The printer is set for Gap or Mark sensing, but a gap, notch, or black mark is not being detected. • The lower media sensor is not positioned correctly. • Gap/Mark Threshold is set too high or Paper Out Threshold is set too low. 1. Check that the setting of the Gap/Mark Sensor in the SESNOR > Control section matches the installed media. 2. Check the position of the lower and upper media sensors. (See *Positioning the Media Sensors* on page 45.) 3. Clean the sensor assembly and paper path. 4. Run Auto Calibrate to improve the sensor's ability to detect the media in use. 5. Run the *Sensors > Diagnostic > Media Profile*. 6. Run Manual Calibrate. (See *Running Manual Calibrate* page 52.) 7. Manually change the Gap/ Mark Threshold and/or Paper Out Threshold values.

Table 13. LCD Message Troubleshooting

Displayed Message	Solution/Explanation
GPIO OPTION CARD PROGRAM COMPLETE ---------- RESUMING BOOT_UP	Status message indicating that the GPIO option card FPGA was successfully programmed. No action is required.
GPIO OPTION CARD PROGRAM FAILED ---------- PRESS KEY TO CONTINUE	Status message indicating that the GPIO option card FPGA failed to program. 1. Pressing any key on the panel will cause the printer to continue boot-up with the previous FPGA configuration.
GRF CHK ERROR PRESS PAUSE	In the TN emulation, the printer received a non-printable character. 1. Press the PAUSE key and return to the ONLINE state.
Half Speed Mode	The printhead or power supply is approaching a hot state. Half Speed Mode helps the cooling process and should permit completion of print jobs. Half Speed Mode helps prevent a PRINT HEAD HOT or PWR SUPPLY HOT fault, which will stop the printer. 1. Allow printer to continue printing. Full speed will resume automatically when a lower printhead or power supply temperature is achieved. 2. Let the printer cool down. Full speed will be restored when printing is resumed. 3. Lower *Media > Image > Print Intensity* and *Media > Speed > Print Speed* to reduce frequency of Half Speed Mode.
HEAD POWER FAIL	Printhead lost power. 1. Replace the printhead. 2. Power off the printer for 15 seconds, then power back on again. 3. If the problem persists, contact your authorized customer service representative.
IGP/PGL ERROR	Appears when the "Fault" option is selected from Error Report in the front panel and there is an application programming error with the IGP emulation PGL. 1. Correct the application programming error as described in the *PGL Programmer's Reference Manual*. 2. The other option is to modify *Application > PGL Setup > Error Report* menu.

Table 13. LCD Message Troubleshooting

Displayed Message	Solution/Explanation
INCOMPATIBLE WITH CUTTER	Peel-Off Media Handling selection was attempted with the cutter option still installed. These modes require that the Peel option be installed to use the Label Taken Sensor. 1. Select a different Media Handling Mode. 2. Power off the printer and remove the cutter option, install the Peel option, power on the printer and select Peel-Off Mode.
LABEL MISSING Check Paper Path	The Label Taken Sensor did not detect the label present over the tear bar with Peel-Off Media Handling mode enabled. • The label was removed before the printer stopped printing or before the LCD “Remove Label” message displayed. • The label slipped behind the platen roller. • The label wrapped around the platen roller. • Peel-Off Media Handling mode was mistakenly selected. 1. Press the PAUSE key to continue printing and then wait for the LCD “Remove Label” message before removing the label. 2. Open the pivoting deck, reinstall the label, close the deck, press the PAUSE key, and continue printing. 3. Open the pivoting deck and remove wrapped labels from the platen. Clean all adhesive from the platen. Reinstall labels, close the deck, press the PAUSE key, and continue printing. 4. Select the correct Media Handling mode in the *Media* > *Handling* section.

Table 13. LCD Message Troubleshooting

Displayed Message	Solution/Explanation
OPTION NOT INSTALLED	If the printer is powered on with the cutter enabled in *Media > Handling > Media Handling*, but the cutter itself is open (in the down position, or the cutter upper enclosure is removed) the printer cannot detect the cutter. When using the cutter, the printer must be powered on with the cutter in the up position and the cutter upper enclosure installed. 1. Check that the cutter option is installed, connected in the up position, and the upper enclosure installed before powering on the printer. 2. Install the cutter option or change to the correct option in the *Media > Handling > Media Handling* menu. 3. If the error persists, contact your authorized customer service representative. OR If the printer is powered on in Peel-Off in *Media > Handling > Media Handling*, but the Peel option cannot be detected by the printer. When using Peel-Off handling, the printer must be powered on with the Peel option installed. 1. Check that the Peel option is installed and connected before powering on the printer. 2. Install the Peel option or change to the correct option in the *Media > Handling > Media Handling* menu. If the error persists, contact your authorized customer service representative.
OVERALL GRADE FAIL	Overall data validation failure: decodeability, percent decode, defects, modulation, EC Min, Rmin, and/or symbol contrast. 1. Press Pause to clear the message. 2. Adjust the parameter that is causing the failure. Run a *Validator > Diagnostics > Scan Report* to see which parameter failed. 3. Lower the *Validator > Grading > Overall Grade* to a point where the worst parameter grade will be above this threshold.

Table 13. LCD Message Troubleshooting

Displayed Message	Solution/Explanation
PAPER OUT Load Paper	The printer does not sense media: • Media was not installed or has run out. • A break in media has occurred. • Media was not routed or installed correctly. • The media sensor is not positioned correctly. • Media is installed correctly, but the sensor is not detecting it. • *Sensors > Control > Gap/Mark Thresh* value may be set too high and/or *Sensors > Control > Paper Out Thresh* may be set too low. • The printer detected a false PAPER OUT when changing to Gap or Mark sensing or vice-versa. 1. Install media. If a break occurred, reinstall the media. Press the PAUSE key to clear the fault message. 2. Verify the lower media sensor is properly positioned under the media. Run Auto Calibrate to improve the ability of the sensor to detect the installed media. 3. Check if the Gap/Mark Threshold is too high or the Paper Out Threshold is too low. Lower the Gap/Mark Threshold or raise the Paper Out Threshold value. 4. If using media with no gaps or black marks, perform Auto Calibrate to establish a valid Paper Out Threshold. 5. If the printer detected a false PAPER OUT when changing to Gap or Mark sensing or vice-versa, press the PAUSE key and run Auto Calibrate.
PARITY ERROR	Parity error (serial interface). 1. Check your serial host interface parameter settings. If necessary, change them so they match the settings of the attached host.
POOR SCANNING Check Head&Heat	Data validation failure: percent decode. The validator detected gross inconsistencies within the height of the bar code. These types of failures are likely attributed to large blemishes within the bar code, caused by ribbon wrinkle or debris on media. 1. Check for a wrinkled ribbon or debris on media. Roll wrinkled area onto take-up spindle. 2. Adjust the printhead pressure. 3. Modify *Media > Image > Print Intensity* or *Media > Speed > Print Speed*.

Table 13. LCD Message Troubleshooting

Displayed Message	Solution/Explanation
POOR SCANNING Check media	Data validation failure: percent decode. The validator detected gross inconsistencies within the height of the bar code. These types of failures are likely attributed to large blemishes within the bar code, caused by ribbon wrinkle or debris on media. 1. Check for a wrinkled ribbon or debris on media. Roll wrinkled area onto take-up spindle. 2. Adjust the printhead pressure. 3. Modify *Media* > *Image* > *Print Intensity* or *Media* > *Speed* > *Print Speed*.
POOR SCANNING Inspect head	Data validation failure: hardware defect. The validator detected unexpected dark spots in spaces or light spots in bars. This usually indicates a poor ribbon/media combination, a dirty printhead, or a burned pixel. 1. Check paper and ribbon to make sure they are clean, unwrinkled, and installed properly. 2. Clean printhead. 3. If message persists, replace the printhead.
POWER SAVER MODE	This is a status message. The printer is in low-energy idle state, the higher voltages are off, and only +5Vdc logic circuits are active. No action required.
PRINT HEAD COLD	Printer is in a cold environment or the printhead data cable has become dislodged from the back of the printhead or the controller. 1. Reseat the cables on printhead. 2. Change the printhead. 3. Place printer in a warmer location. 4. If problem persists, contact your authorized service representative.
PRINT HEAD HOT	The printhead has become overheated. 1. Allow the printhead to cool down for 5 minutes, then press PAUSE. Resume printing. 2. If possible, reduce print intensity. 3. If problem persists, contact your authorized service representative.
PRINT HEAD UP Close Print Head	Printhead is not closed and completely latched. 1. Close and latch the printhead pivoting deck.

Table 13. LCD Message Troubleshooting

Displayed Message	Solution/Explanation
PRINTER HOT	The printer has detected higher than usual temperatures on the controller PCBA. 1. Power off the printer for 15 seconds, then power the printer back on. 2. Move the printer to a cooler location. 3. If the problem persists after moving the printer to a cooler location, contact your authorized customer service representative.
PRINTER UNDER REMOTE CONTROL	Indicates that PNE has control of the printer. 1. Press any key on the printer.
PROGRAMMING 1284 OPTION CARD ---------- DO NOT POWER OFF	Status Message indicating that the IEEE1284 option card FPGA is being programmed. This process will take less than 60 seconds to complete and a message will be displayed when completed.
PROGRAMMING GPIO OPTION CARD ---------- DO NOT POWER OFF	Status Message indicating that the GPIO option card FPGA is being programmed. This process will take less than 30 seconds to complete and a message will be displayed when completed.
PWR SUPPLY HOT	Power supply is hot. 1. Determine that the fan is operating and that all air vents are unobstructed. 2. Move the printer to a cooler area. 3. If the problem persists, contact your authorized customer service representative.
Remove Label	• A label was detected at the front of the printer by the Label Taken Sensor. This is the normal reminder message when Peel-Off Media Handling has been selected. • A label was removed, but the "Remove Label" message remained. • The incorrect Media Handling mode was selected. 1. Remove the label from the front of the printer to allow the next label to print. 2. Verify that a front door assembly is installed on the printer and that it is properly closed. Ensure that no debris is obstructing the door mirror or the Label Taken Sensor. 3. Change *Media > Handling > Media Handling* to the correct selection.

Table 13. LCD Message Troubleshooting

Displayed Message	Solution/Explanation
Replace printhead for optimal print quality	The printhead has reached the end of the warranty life.
Ribbon Low	• The supply spool is getting low. • If there is a large amount of ribbon still on the supply spool, then the Ribbon Low message is being displayed falsely. 1. Replace ribbon. 2. Disable *Media > Ribbon > Ribbon Low*.
RIBBON OUT Load Ribbon	The ribbon supply spool is empty or the ribbon has broken. 1. Replace ribbon. 2. Reinstall ribbon.

SECURITY VIOLATION #	The software being used is not correct for the printer.
	1. Load the correct software.
	2. If the problem persists, contact your authorized customer service representative.
	NOTE:
	# represents source of the error where:
	1 = Failure during 3 button download
	2 = Failure during 2 button download
	3 = Failure during power up

Speed Exceeds Validator Limit	The Print Speed or Slew Speed value is above 6 IPS as the power-up default with the validator option installed, or the user attempted to increase Print Speed or Slew Speed above 6 IPS. 1. Change *the Media > Speed > Print Speed* or *Slew Speed* to 6 IPS or less when using the Validator option, and save the new value as the power-up default.
Unscannable: xx Missing Codes	Data validation error: missing barcode. 1. Check the paper and ribbon for cleanliness, wrinkles, etc., or an obstructed validator beam. If there is no validator beam at all, or if the LED is not flashing as barcodes pass through the validator beam, recycle validator power. If the problem persists, contact your service representative. **NOTE:** xx represents the number of missing barcodes (on the form) that caused the warning/fault to be declared.

Table 13. LCD Message Troubleshooting

Displayed Message	Solution/Explanation
Validator not communicating	The *Validator* > *Control* > *Validator Active* = Enable, but when the printer was first powered up it could not communicate with the validator. 1. Check that the validator signal cable is securely connected to the validator unit.

A Specifications

Print Method

Table 14. Printing Specifications

	T6204e	T6304e	T6604e	T6206e	T6306e
Print Resolution (dpi)	203	300	600	203	300
Min. Dot Size (sq. in)	.005 0.127mm	.0033 0.083mm	.0016 0.042mm	.005 0.127mm	.0033 0.083mm
Max. Print Speed (ips)	14	12	6	12	10
Max. Slew Speed (ips)	14	12	6	12	10
Max. Print Width	4.1 104.1mm	4.1 104.1mm	4.1 104.1mm	6.5 165.1mm	6.5 165.1mm
Print Length	0.25 ~ 99” 6.3 ~ 2515mm		0.25 ~ 50” 6.3 ~ 1270mm	0.25 ~ 99” 6.3 ~ 2515mm	

Media Handling

T6x04e Four-Inch	Media Width (max)	Print Speed (max)	Rewind Spindle Capacity	Limitations
Tear-off	4.5in	14ips 12ips 6ips	-	-
Batch Rewind	4.13in	10ips 10ips 6ips	1in Spindle: Rewinds ½ of 8in roll 3in Adapter: Rewinds ⅓ 8in roll	Not compatible with external RFID
Peel Rewind	4.5in	6ips nom	2.7in Spindle: Rewinds full 8in roll liner	Not compatible with external RFID
Cutter	4.5in	6ips nom	-	Not compatible with ODV

T6x06e Six-Inch	Media Width (max)	Print Speed (max)	Rewind Spindle Capacity	Limitations
Tear-off	6.8in	12ips 10ips	-	-
Batch Rewind	6.8in	10ips	3in Spindle (only): Rewinds ⅓ of 8in Roll	Not compatible with RFID
Peel Rewind	6.8in	6ips nom	2.7in Spindle: Rewinds full 8in roll liner	Not compatible with RFID
Cutter	6.8in	6ips nom	-	Not compatible with ODV

Media

Table 15. Media - General Information

Type	Roll-fed, die-cut continuous or fanfold labels, tags or tickets; most direct thermal or thermal transfer materials.
Supply Roll	8 inch (203 mm) maximum diameter on 1.5-inch (37.5 mm) to 3-inch (76 mm) diameter cores.
Optional Internal Rewinder	Accepts up to a 5-inch diameter roll of label backing.
Label Material	Thermal transfer plain-coated papers, vinyl, Mylar, metallized paper, non-woven fabric, fine woven fabric, thermal-visible light scannable paper, infrared scannable paper, thermal ticket/tag stock, thermally-sensitive plastic stock.
Media Sensing	Horizontally moveable sensor assembly. When set to Mark, it senses a black mark on the underside of tag or label stock. When set to Disable, it senses no label indicators or ignores all existing label length indicators on the installed media.
Optional Label Peel-Off	Peels and presents label to the operator, one at a time. Automatic Label Peel-Off is supported only when the internal rewinder is installed. (The internal rewinder is a factory- or field-installed option.)
Label Taken Sensor (part of the Peel/Rewinder Option)	Detects when a printed label is at the printer exit throat. Used only for Peel-Off Media Handling mode.

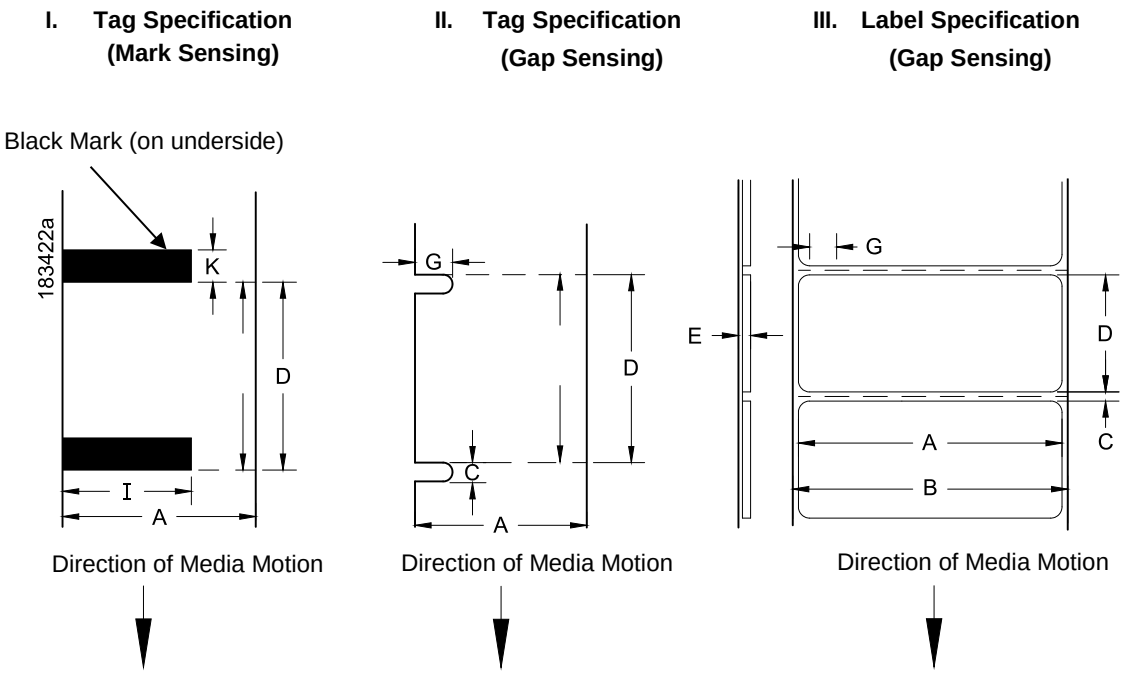

Figure 17 Media Dimensions

Table 16. Media Specifications

		T6X04e	T6X06e
A	Label Width Range	0.75 ~ 4.5 in. 19.1 ~ 114.3mm	2.0 ~ 6.8 in. 50.8 ~ 172.7 mm
B	Backing Width Range	0.75 ~ 4.5 in. 19.1 ~ 114.3 mm	2.0 ~ 6.8 in. 50.8 ~ 172.7 mm
C	Min. Gap/Hole/Notch Height	0.10 in. 2.54 mm	
K	Min. Refl. Mark Height	0.10 in. 2.54 mm	
I	Min Refl. Mark Width	0.5 in. 12.7 mm	
E	Media Thickness Range (excludes on-metal RFID)	.0025 ~.010 in. .0635 ~.254 mm	
	Note: For w/ RFID model, the media thickness up to 0.087″ (2.2 mm) for on-metal RFID tags. (V3 only)		
G	Width of Inter-label gap/hole	0.25 ~ 0.50 in. .0635 ~ 12.7 mm	

Table 16. Media Specifications

		T6X04e	T6X06e
D	Media Length Range		
	• Continuous/Batch Mode[1]	0.25 in. (6.35mm) – 99 in. (2515mm)	1 in. minimum (25.4 mm) – 99 in. (2515 mm)
	• Tear-Off Strip Mode[1]	0.25 in. (6.35mm) – 99 in. (2515mm)	1 in. minimum (25.4 mm) – 99 in. (2515 mm)
	• Peel-Off Mode	1 in. minimum (25.4 mm) – 99 in. (2515 mm) [2]	1 in. minimum (25.4 mm) – 99 in. (2515 mm) [2]
	• Cut Mode	1 in. minimum (25.4 mm) – 99 in. (2515 mm)	1 in. minimum (25.4 mm) – 99 in. (2515 mm)
	These figures are approximate and depend upon the active emulation and application. (1) Media length must be greater than 1.96” (49.8mm) for tear function. (2) 1.5 inch with Validator support.		

Ribbon

Table 17. Ribbon Specifications

	T6X04e	T6X06e
Ribbon Width Range	0.75-4.5 in. 19 -114.3 mm	2.0-6.8 in. 50.8-172.7 mm
Max. Ribbon Length	450m	450m
Max Ribbon Roll Diameter	3.60 in.	3.60 in.
Ribbon Wind Direction	Outside	Outside

Indicators and Switches

Table 18. Indicators and Switches

Indicator Lights:	ONLINE
Switches:	POWER
Keys:	PAUSE, FEED, LEFT SOFT KEY, RIGHT SOFT KEY, UP / DOWN / LEFT / RIGHT ARROW KEYS, ↵ (ENTER)
Message Display:	**320 x 240 Color QVGA display**

Memory

Table 19. Memory Specifications

Flash Memory (standard)	256MB soldered onto Controller PCBA
DRAM (standard)	512MB soldered onto Controller PCBA

Media Cutter Option

Cutters are designed to cut tags and label liner. Avoid cutting through the adhesive backed portion of any media.

Cutting through perforate liner is not recommended. In addition, although the cutter may operate with synthetic, foil, and woven materials, application testing is encouraged to ensure reliable operation and to assess cutter life.

Table 20. 4 and 6 inch Models

Typical Life	> 1,000,000 cuts
Warranty**	500,000 cuts or 12 months (whichever comes first)
Environment	Same specifications as printer
Cutting Method	4in Guillotine 6in Rotating single-edged blade
Media Thickness Range	0.0025 to 0.010 in. (0.064 to 0.254 mm)
Media Width Range	Same range as printer
Media Length Range	1.00 to 99 in. (25.4 to 2515 mm)

** Warranty is based on cutting label liner and paper based tag stock only. All other materials (including synthetic, foil, and woven materials) may reduce cutter life to an indeterminate amount, even when they are within the rated media thickness specification. Qualification and life-testing is recommended for these cutter applications.

Host Interfaces

Table 21. Host Interface Standard and Options

1. Serial RS-232 at 600, 1200, 2400, 4800, 9600, 19200, 38400, 57600, or 115200 baud.
2. USB 2.0
3. USB host
4. Ethernet 10/100
5. Wireless 802.11 a/b/g/n (option)
6. Parallel (Centronics compatible) or IEEE 1284 bi-directional (option)
   The printer is no longer Energy Star 3.0 certified when the parallel port option is installed.

Power

Table 22. Power Source and Grounding

Power Source:	115 or 230 VAC 50/60Hz switching power supply.
Grounding:	Unit must be connected to a properly grounded receptacle.

Table 23. Power Consumption

	4 inch printers			6 inch printers	
	203 dpi 14 ips	**300 dpi 12 ips**	**600 dpi 6 ips**	**203 dpi 12 ips**	**300 dpi 10 ips**
Energy Power Saver Mode	4 Watts	4 Watts	4 Watts	4 Watts	4 Watts
Standby	12 Watts	12 Watts	12 Watts	12 Watts	13 Watts
25% Print Density	207 Watts	168 Watts	148 Watts	263 Watts	275 Watts
T6e in Thermal Transfer Print Mode, +15 Intensity, 120VAC 60Hz input, 22degC @ 40% RH					

Environmental

Table 24. Environmental Information

Operating Temperature:	23° F to 104° F (-5° C to 40° C)
Storage Temperature:	-40° F to 150° F (-40° C to 60° C)
Operating Humidity: Storage Humidity:	20% to 85%, non-condensing 5% to 85% non-condensing
Ventilation:	Free air movement

Table 24. Environmental Information

Dust:	Non-conducting, non-corrosive

Physical

Table 25. Physical Dimensions

	T6X04e	T6X06e
Outside Dimensions (in.)	12.3H x 10.97W x 20.3D	12.4H x 14.1W x 20.3D
Weight (lbs/kg)	31.9lbs. (14.5kg)	38.2lbs. (17.4kg)
Batch rewind: Add 1.75in D ODV: Add 7.5in D and 6in H Media Cutter: Add 1.4in D		

Acoustic Specifications

Table 26. T6 Acoustic Noise Levels per ISO 9296

	T6X04e	T6X06e
Printing @ 6 IPS	64 dBA	64 dBA
Standby:	Same as Ambient	Same as Ambient

B *Printer Options*

Media Handling Accessories and Options are offered with the printer to enhance its capabilities and to provide a large degree of application flexibility. A description of the option complement is given below. Field-installable options include installation instructions.

Media Handling Accessories

Media Cutter

The printer may be ordered with a cutter mechanism installed (for cutting tags and label liner), or the option can be installed by an authorized service representative at a later date. Once installed, the printer can be configured to automatically cut media after each or a specified number of labels is printed.

Peel Dispenser

Peels off labels one at a time before printing the next label and rewinds the liner into a discardable roll. Peel-off is available as a factory option or field installable kit that includes an internal label rewinder.

Internal label batch rewinder

Rewinds printed labels into a removable roll. Batch rewind is available as a factory option or field installable kit that includes an internal label rewinder.

Media Cutter Tray

This option is used exclusively with the media cutter option to collect cut labels or tag stock. This option can be field installed by the operator.

Hardware Options

Online Data Validator

This option provides the capability for verifying printed barcode quality during the printing process.

The printer may be ordered with the Online Barcode Validator installed, or the option can be field installed by an authorized service representative.

RFID

This option provides the capability of programming RFID tags during the printing process. The printer may be ordered with the RFID reader installed.

Interface Options

Wireless NIC (802.11 a/b/g/n wireless)

The Wireless NIC provides 802.11 a/b/g/n connectivity. The card provides wireless connectivity without expensive cabling and reconfigurations required from a wired network. PNE (standard with the wireless NIC), is a printer management tool.

General Purpose Input/Output (GPIO)

GPIO is both hardware and software. The hardware is the actual IO board to be mounted in the printer, and the software is the GPIO Manager which is part of PNE. The GPIO hardware is a printed circuit board containing optically isolated inputs and outputs as well as relays. The GPIO software is both a printer resident GPIO event parser and a PC-based GPIO manager that allows the user to define how the general purpose IO hardware should behave for the given application.

Parallel (Centronics or IEEE-1284)

An optional parallel interface that enables the printer to operate in Centronics or IEEE-1284 mode. The choice is made via the *Host IO* > *Control* > *Parallel Choice* menu.

Software Options

IPDS over Ethernet

This option supports the IPDS language to allow a LAN connection and is only available when *System* > *Control* > *Program Select* is set to IPDS/PGL..MGL. The printer may be ordered with this option enabled by an SPX key or by an authorized service representative. The printer must have a 300 DPI printhead installed.

Telnet

The TN 5250 option enables your printer to communicate with an IBM host through a network interface using the 5250 datastream. This feature allows you to use an application generated for the coax/twinax emulation to be printed through the network interface. The printer may be ordered with this option enabled by an SPX key or by an authorized service representative. The menu *System* > *Control* > *Program Select* must be set to TN5250.

Postscript/PDF

The Postscript/PDF option enables your printer to support Postscript and PDF applications directly from the host computer making your ERP and WMS integration simple. The printer may be ordered with this option enabled by an SPX key or by an authorized service representative. The menu *System* > *Control* > *Program Select* must be set to PS/PDF.

Premium Asian Fonts

A selection of three different purchasable Asian fonts can be provided (one font per SD card). These Asian fonts include Hanzi GB, Kanji SJIS, and Hangul, are available for use when the SD card is installed.

Andalé Fonts

A selection of four different purchasable Andale fonts can be provided (one font per SD card). The Andale fonts will become active when the SD card is installed.

Quick Change Memory Cartridge

The QCMC provides the ability to duplicate an entire printer's firmware, saved configurations, and custom files quickly through the printer's control panel with a user friendly interface.

Supplies

The best printing solution is achieved when the printer, ribbon, and media are matched to the application requirements. The use of Genuine Printronix Thermal Media and Ribbons will ensure optimum image quality, consistent bar code performance, and extended life of the printhead.

For any other questions concerning Genuine Printronix Thermal Supplies, please visit our company's website or email to the following entities:

Americas:	Service@PrintronixAutoID.com
Europe, Middle East, Africa:	EMEA_support@PrintronixAutoID.com
Asia:	APAC_support@PrintronixAutoID.com
China:	CHINA_support@PrintronixAutoID.com

Manuals

The most recent edition of our manuals are available from our company's website

- *Maintenance Manual*
- *LP+ Programmer's Reference Manual*
- *PGL Programmer's Reference Manual*
- *VGL Programmer's Reference Manual*
- *TGL Programmer's Reference Manual*
- *IGL Programmer's Reference Manual*
- *STGL Programmer's Reference Manual*
- *DGL Programmer's Reference Manual*
- *IEGL Programmer's Reference Manual*
- *MGL Programmer's Reference Manual*
- *ZGL Programmer's Reference Manual*
- *PXML Printronix XML Reference Manual*
- *ODV Online Data Validator User's Manual*
- *RFID Labeling Reference Manual*
- *GPIO Module User's Manual*
- *PrintNet Ethernet User's Manual*
- *PrintNet Enterprise Suite User's Manual*

C Media Cutter Installation

4 Inch Printer Media Cutter Installation

Preparing the Printer

1. Set the printer power switch to O (Off).
2. Unplug the printer power cord from the printer or the AC power source.
3. Set the two screws and front cover aside.

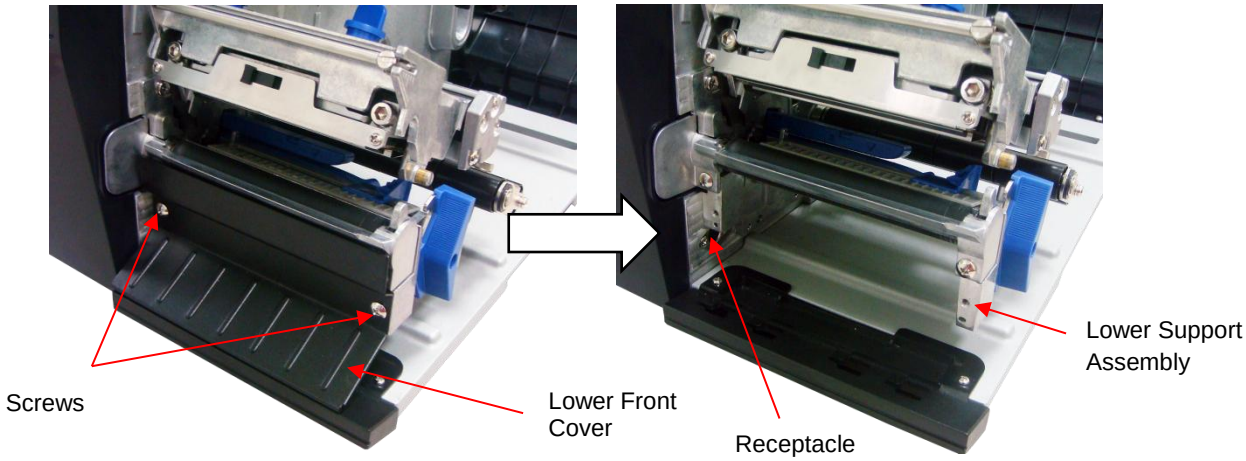

Installing the 4 Inch Media Cutter

WARNING **The cutter blades are sharp. Keep your fingers away from the cutter blades.**

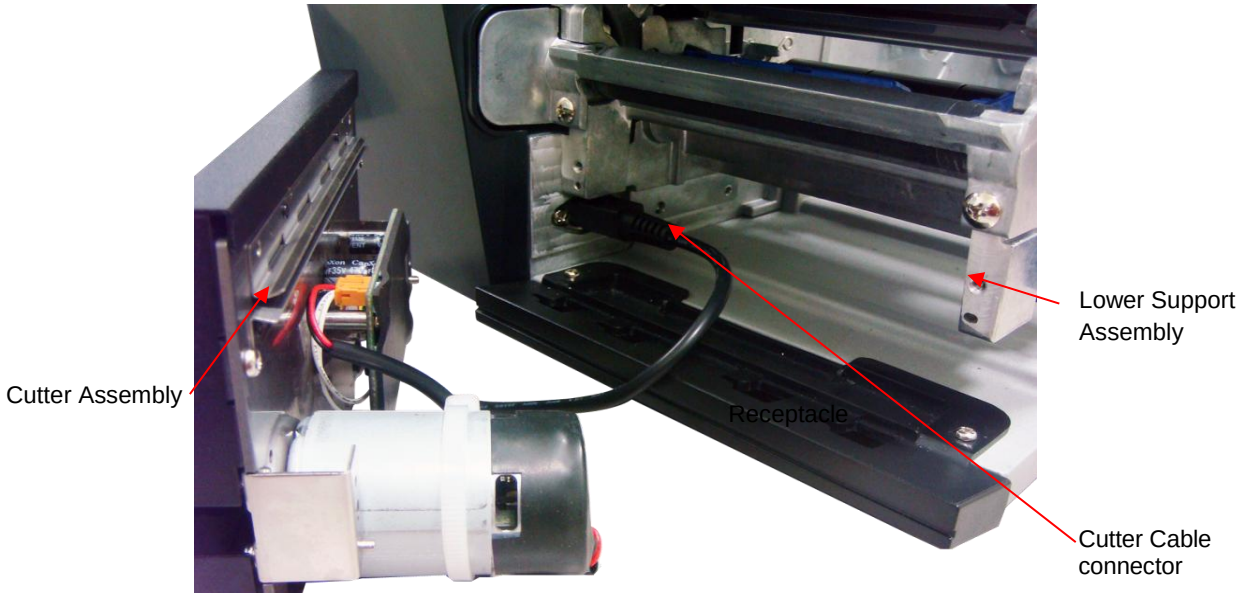

1. Plug the cutter assembly mini DIN cable connector into the printer receptacle (the flat section of the plug must be at the top). Please note: RFID version will have a second connection for the RFID antenna.
2. Place the cutter assembly in position.

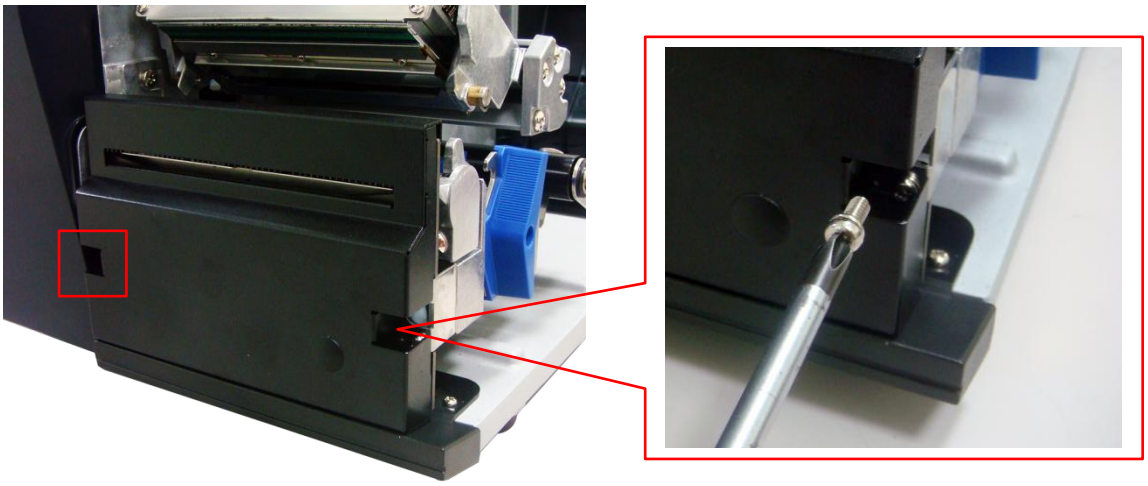

3. Use the two screws provided in the cutter kit to install the cutter assembly on the lower support assembly.

Installing the 4 Inch Cutter Tray

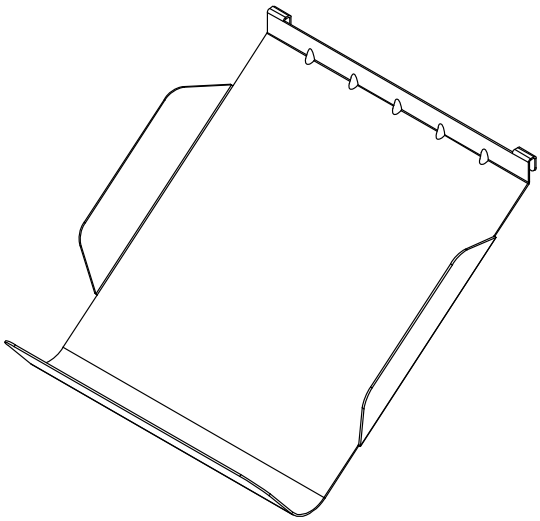

Restoring the Printer to Operation

1. Set the printer power switch to | (ON).
2. Press the PAUSE key to place the printer OFFLINE (Home Screen).
3. Find the Settings ICON and press ENTER.
4. Press the up and down arrow keys together until “ENTER SWITCH UNLOCKED” displays.
5. Find the Media ICON and press ENTER.
6. Go to the “Handling” submenu and press ENTER.
7. Find the “Media Handling” menu and press ENTER to go into Edit Mode.
8. Select the “Cut” option and hit ENTER.
9. Press the PAUSE key to put the printer back ONLINE.
10. Make sure any media sticking out of the platen goes in the cutter entrance slot.
11. Test the printer cutting operation and print quality by selecting the *Tools > Print Tests > Run Test* menu and printing one of the test patterns. (Refer to *Diagnostics and Troubleshooting* page 269.)
12. To save the configuration parameters, refer to *Saving a Configuration* page 58.

Removing the 4 Inch Media Cutter

1. Set the printer power to O (OFF).
2. Remove the two screws securing the cutter assembly to the lower support assembly.
3. Unplug the Cutter mini DIN cable connector from the printer receptacle.
4. Remove the media cutter from the printer.
5. Install the front door assembly on the printer lower support assembly Media Cutter Tray Installation.

6 Inch Printer Media Cutter Installation

Preparing the Printer

1. Set the printer power switch to O (Off).
2. Remove the two screws that secure the lower front cover to the printer lower support assembly. Set the two screws and front cover aside.
3. Set the two screws and front cover aside.

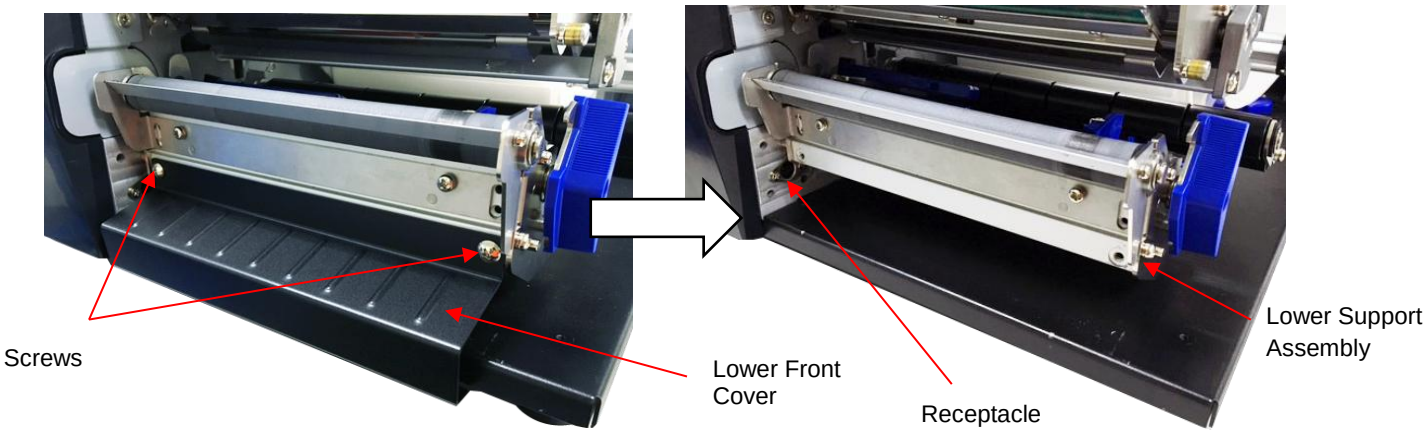

Installing the 6 Inch Media Cutter

WARNING **The cutter blades are sharp. Keep your fingers away from the cutter blades.**

1. Open the cutter bracket as shown below.

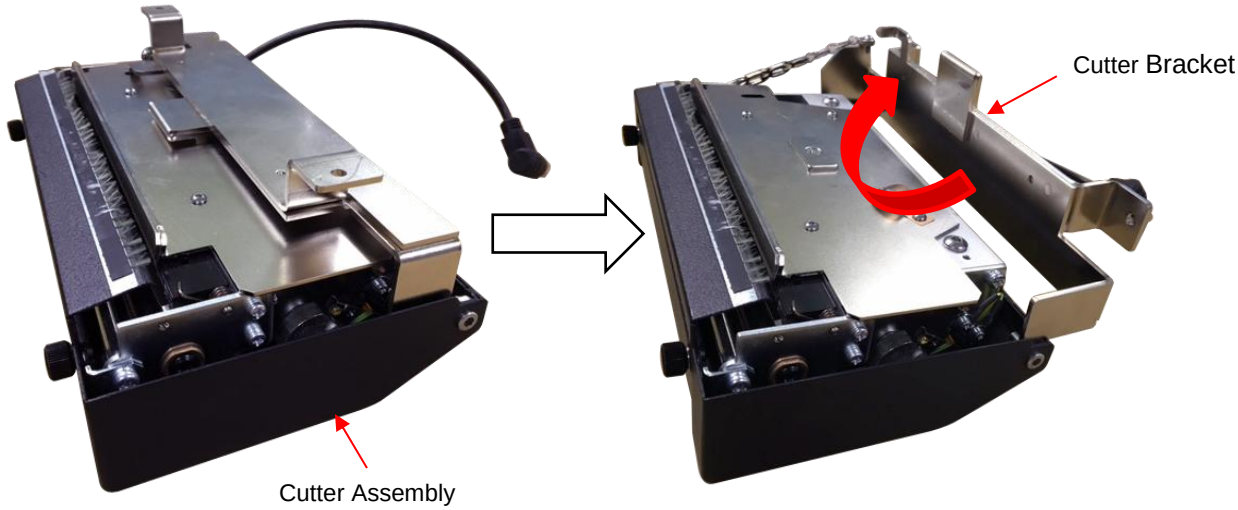

2. Plug the cutter assembly mini DIN cable connector into the printer receptacle (the flat section of the plug must be at the top). Please note: The RFID option will include a second connection for the RFID antenna.

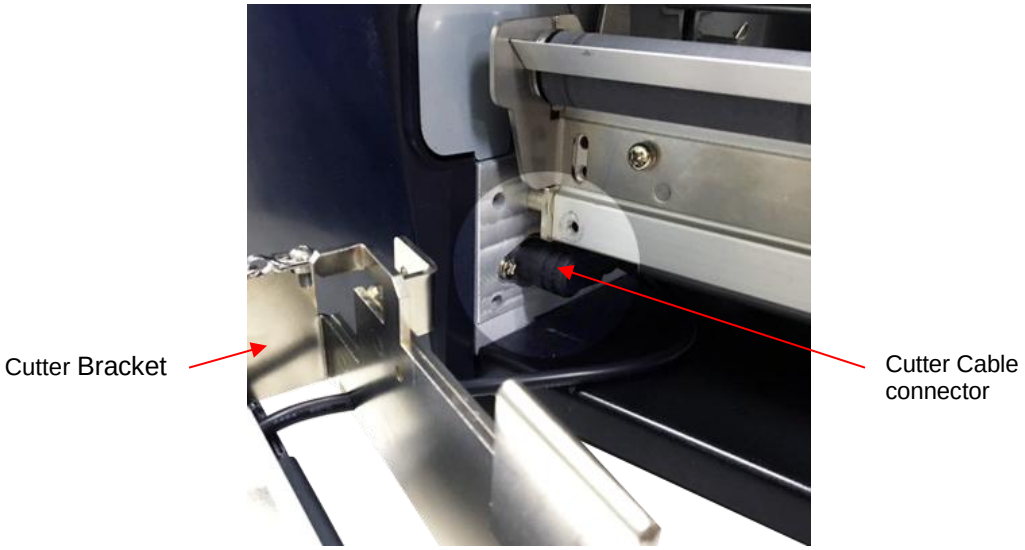

3. Place the cutter assembly in position. Use the two screws provided in the cutter kit to install the cutter assembly on the lower support assembly.

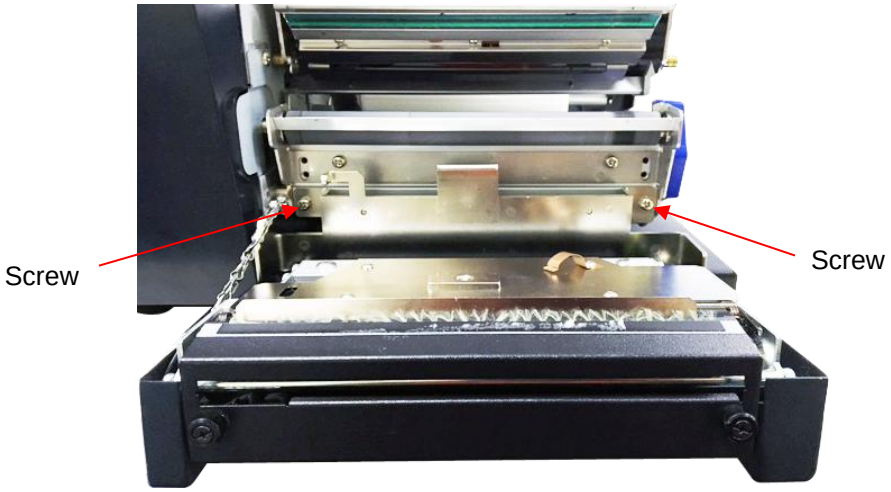

4. Close the cutter assembly. **NOTE**: The cutter must be in the closed (up) operating position before the printer is powered on or an “OPTION NOT INSTALLED” message will display when “Cut” Media Handling mode is selected.

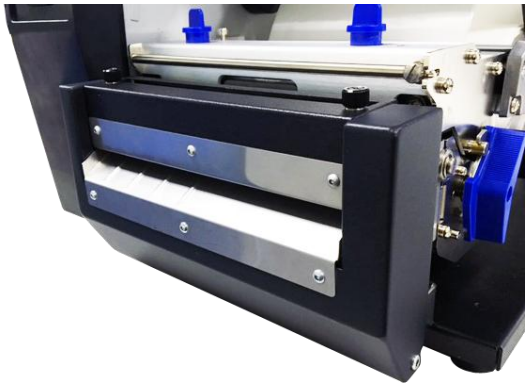

Installing the 6 Inch Cutter Tray (or Bin)

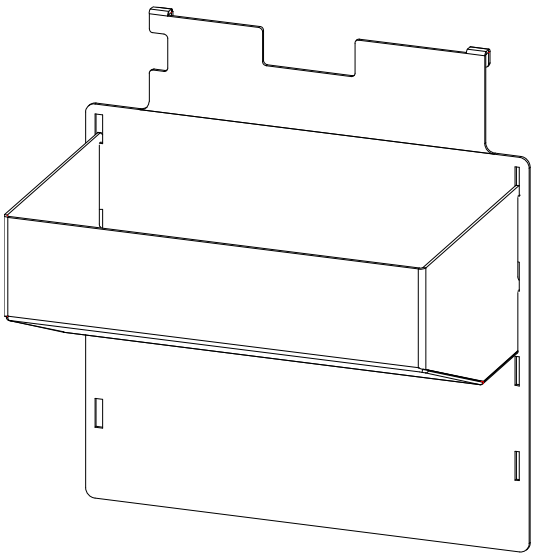

Restoring the Printer to Operation

NOTE: The printer cannot detect the presence of the cutter unless the cutter is in the up (closed) position and the cutter top cover is installed when the printer is powered on.

1. Set the printer power switch to | (ON).
2. Press the PAUSE key to place the printer OFFLINE (Home Screen).
3. Find the Settings ICON and press ENTER.
4. Press the up and down arrow keys together until “ENTER SWITCH UNLOCKED” displays.
5. Find the Media ICON and press ENTER.
6. Go to the “Handling” submenu and press ENTER.
7. Find the “Media Handling” menu and press ENTER to go into Edit Mode.
8. Select the “Cut” option and hit ENTER.
9. Press the PAUSE key to put the printer back ONLINE.
10. Make sure any media sticking out of the platen goes in the cutter entrance slot.
11. Test the printer cutting operation and print quality by selecting the *Tools > Print Tests > Run Test* menu and printing one of the test patterns. (Refer to *Diagnostics and Troubleshooting* page 269.)

12. To save the configuration parameters, refer to *Saving a Configuration* page 58.

Removing the 6 Inch Media Cutter

1. Set the printer power to O (OFF).
2. Remove the two screws securing the cutter assembly to the lower support assembly.
3. Unplug the Cutter mini DIN cable connector from the printer receptacle.
4. Remove the media cutter from the printer.
5. Use the two screws that originally held the lower front cover in place to secure the cover to the lower support assembly.

D Loading WLAN Certificates

Overview

This section describes how to load the certificate(s) for both the WLAN Extensible Authentication Protocol (EAP) and SOTI Connect https://www.soti.net/products/soti-connect/ using the **PSA File Utility**. The **PSA File Utility** will take certificate files (generated by the System Administrator) and combine them with the PTX-SETUP commands such that a single output file can be sent to the printer and effectively load the certificates.

IMPORTANT **For the certificates to work correctly, the Real Time Clock (RTC) must be set properly. This can be done using the menus in System > Date.**

WiFi Certificates

There are two options that can be selected for EAP mode that determines whether one or three files is needed. For EAP-TLS, the printer requires three files:

- Certificate Authority (CA) File
- Privacy Enhanced Mail (PEM) Certificate File
- Key File

For EAP-PEAP, only the Certificate Authority File is required. These files should originate from your System Administrator.

NOTE: WLAN Certificates can only be loaded if the WLAN Option is installed in the printer.

SOTI Certificates

There are 4 different certificate files that can be downloaded to the printer to support SOTI connection:

- MQTT Certification File
- File Store File
- Printer Certification File
- Private Key File

One or more of these files can be provided to create a single file that loads them into the printer.

802.1x Certificates

There are 3 different certificate files that can be downloaded to the printer to support the 802.1x connection:

- Certificate Authority (CA) File
- Printer Certification File
- Private Key File

One or more of these files can be provided to create a single file that loads them into the printer.

WiFi Certificates

Windows Procedure

Download the **PSA File Utility** from our company's website. Run the file and then execute the **WiFi Certificate Load** section as follows, choosing either EAP-PEAP or EAP-TLS.

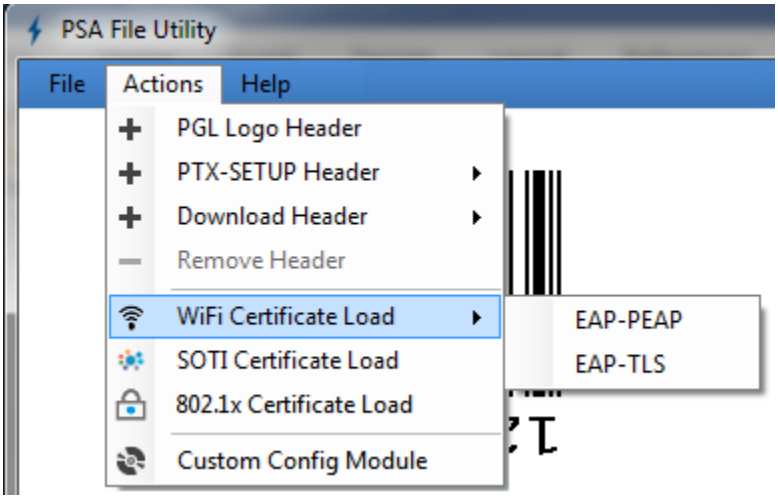

This will bring up a Dialog with either one or three files needed as input:

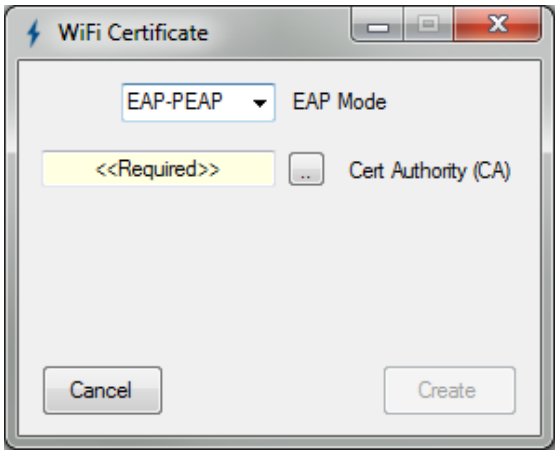

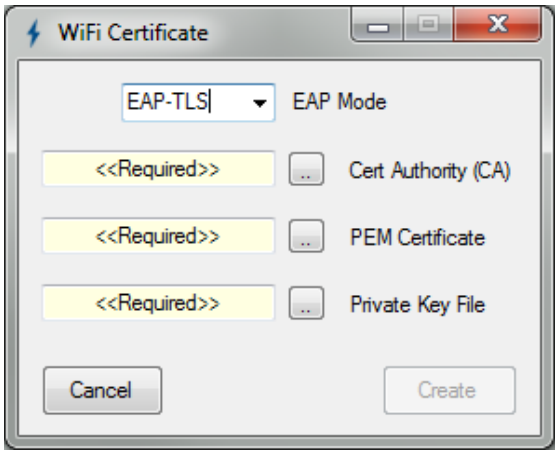

You can either double-click in the file boxes 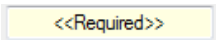 or click on the button to enter the file names for each type of security file.

Once every required file has been entered, the **Create** button can be pushed and the user will be prompted to choose an output file.

Once the output file is created, this output file can then be sent to the printer like any other host application job while the printer is online. No need to put the printer in download mode.

Linux Procedure

1. Download the **WLAN Certificate Utility** from our company's website.

2. Unzip the file and you will find a Linux version (**bdcert.lnx**), Windows version (**bdcert.bat**), and **README.TXT** file.
3. The **bdcert.lnx** must be run from a Linux command line.
4. Usage of the **bdcert.lnx** is as follows:

   When all three certificate files are required:

   bdcert.lnx (ca file) (pem file) (key file) **>** (ptx file)

   When only the certificate authority file is required:

   bdcert.lnx (ca file) **>** (ptx file)
5. Run **bdcert.lnx** with the certificate authority filename, the certificate filename, and the private key filename redirecting the output to an output file or Run **bdcert.lnx** with the certificate authority filename redirecting the output to an output file.
6. Once the output file has been generated it can be sent to the printer through any host interface while the Printer is Online.

Webpage Procedure

NOTE: Certificates can be loaded using the Ethernet or WLAN interface.

1. Make sure the printer is powered up, in ONLINE mode, and that the Ethernet cable is connected or the printer is connected through the WLAN.
2. Get the IP address from the front panel ONLINE screen (or under Network in Settings).
3. Enter the printer's IP address in your browser (e.g., http://10.224.5.21).
4. When prompted for a user name and password, enter "root" for user name and click OK.
5. Click "Network" in the Configuration box.

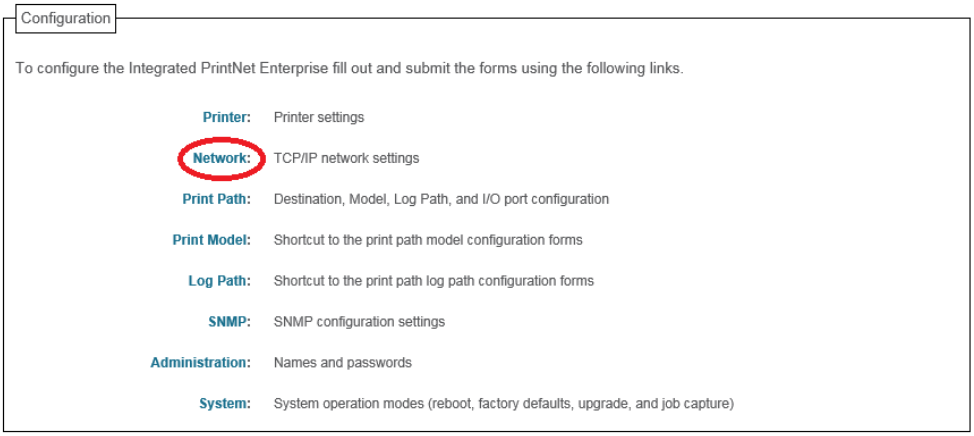

6. In the Certificates and Security Key box browse for the certificate files.

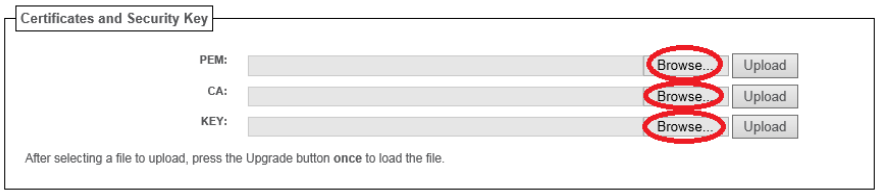

7. Enter the Certificate file in the PEM slot.
8. Enter the Certificate Authority file in the CA slot.

9. Enter the Private Key file in the Key Slot.
10. Click on the Upload button for each of the files

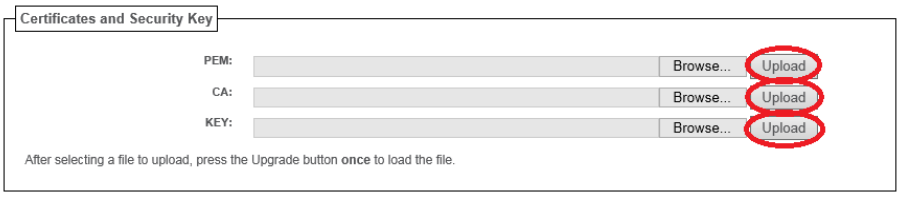

11. After each file is uploaded a Notification message is displayed.

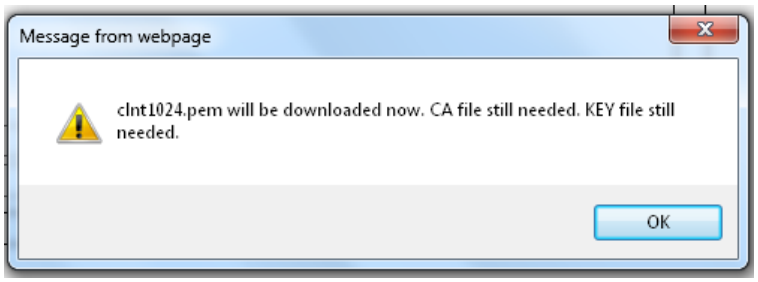

12. Click on OK to continue to the next file.
13. After all the files have been uploaded a notification message is displayed.

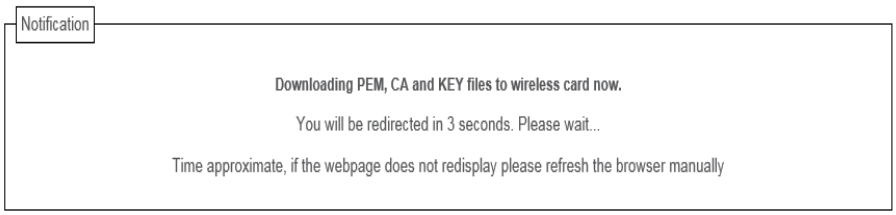

After the Web Page redisplays the Certificates are loaded and ready to use.

SOTI Certificates: Create the Download File

Download the **PSA File Utility** from our company's website. Install and execute the **SOTI Certificate Load** section as follows.

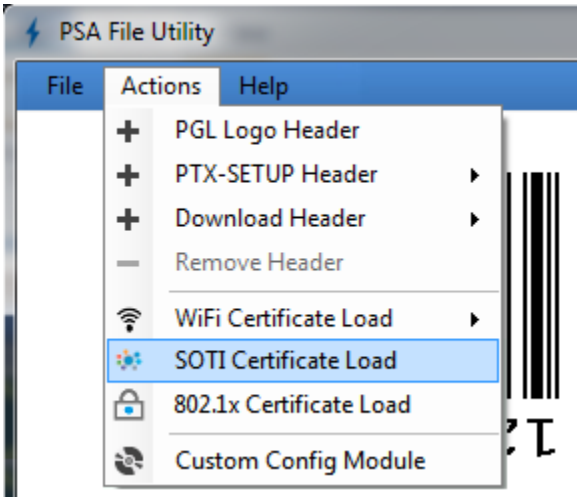

This will bring up a Dialog with four optional files that can be chosen as input:

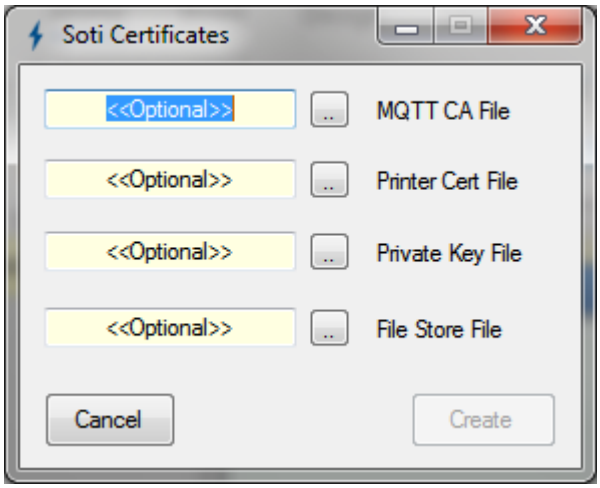

You can either double-click in the file boxes 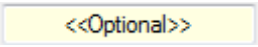 or click on the button to enter the file names for each type of security file.

Once at least one file has been entered, the **Create** button can be pushed and the user will be prompted to choose an output file. Ideally, all four files would be entered before doing the **Create** action.

Once the output file has been generated, it can be sent to the printer as any other application or host job while the printer is online.

802.1x Certificates: Create the Download File

Run the **PSA File Utility** and then execute the **802.1x Certificate Load** section as follows.

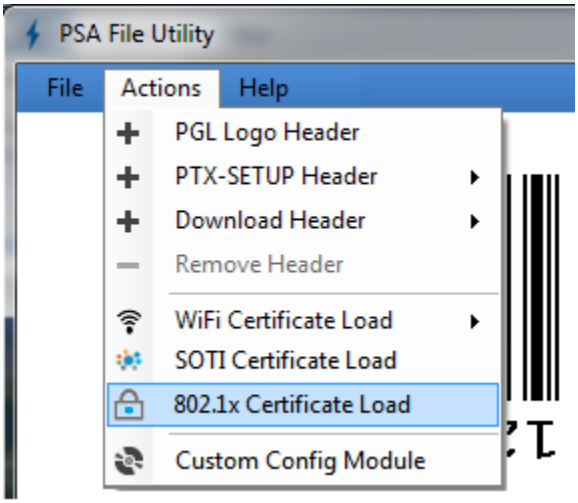

This will bring up a Dialog with three optional files that can be chosen as input:

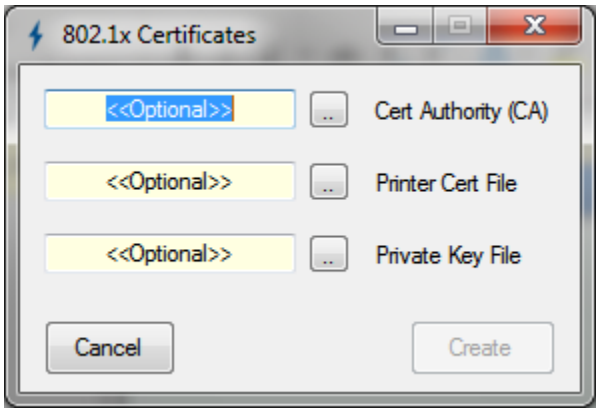

You can either double-click in the file boxes 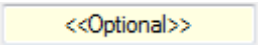

or click on the button to enter the file names for each type of security file.

Once at least one file has been entered, the **Create** button can be pushed and the user will be prompted to choose an output file. Ideally, all four files would be entered before doing the **Create** action.

E PTX_SETUP Commands

Overview

The PTX_SETUP commands are a superset of commands which allow the printer to perform several tasks by parsing commands either stored in flash or sent to the printer by the host. Commands range from re-routing debug statements to downloading complete printer configurations.

This appendix describes the PTX_SETUP commands specific to thermal printers, as well as the commands which are not platform specific.

Command Format

Some concepts to keep in mind are as follows:

15. PTX_SETUP commands are not emulation specific. In a system with IGP emulations, the IGP level emulation will process the PTX_SETUP commands. In a system without an IGP, the PTX_SETUP commands will be processed by the base emulation (e.g., LP+).
16. Since there is no disk on a flash-based printer, DISK_IO commands are now called FILE_IO. However, for backwards compatibility DISK_IO and FILE_IO are synonymous.
17. The PTX_SETUP command set is case sensitive; all PTX_SETUP commands are in upper case characters only.
18. The white space separating commands may be any number of spaces and tabs. This allows a PTX_SETUP file to be formatted for easier readability.
19. The PTX_SETUP and PTX_END command should be followed by a new line character.
20. Any unknown command will terminate the PTX_SETUP processing. The offending command will be the first line of printed text.
21. Although the original implementation of PTX_SETUP allowed for only a single parameter, separated from the sub-command by a single semicolon (;) character, the new PTX_SETUP command set allows for multiple parameters separated by commas, semicolons, spaces or tabs.

Each emulation has modes in which the PTX_SETUP commands could get missed. For example, when a PGL label is being defined using the ~CREATE … END sequence, PTX-SETUP commands will not be processed during label format definition.

Therefore, it is highly recommended that all PTX_SETUP commands be placed between print jobs, rather than attempting to embed them within jobs.

PTX_SETUP commands have the following format:

(SFCC)PTX_SETUP

*Command***–***Action***;***Parameter*

PTX_END

For example, if the SFCC assigned to PTX_SETUP is the default value of the exclamation mark (!, hex 21), and you wanted to load configuration number 4, you would use the following command:

!PTX_SETUP

CONFIG–LOAD;4

PTX_END

This Appendix Section will be divided into different PTX_SETUP groups based on the *Command*. Each section will show different *Actions* and *Parameters* with a brief description of each. Some *Commands* may not be available for every product as they are often related to a particular option or capability. This will be noted in the Section.

NOTE: When a file system error occurs, a message will be displayed on the front panel indicating the error, and the action needed to take to correct the error.

CONFIG Commands

!PTX_SETUP

CONFIG–*Action*;*Parameter*

PTX_END

Table 27. PTX_SETUP CONFIG Commands

Action	Parameter	Description
CLEAR_NAMES		This command resets all of the configuration names to their default values.
DELETE	*Cfg*	Deletes Configuration number *Cfg* 1-8.
DOWNLOAD	*Cfg*	This command saves the configuration data that follows as configuration *Cfg. Cfg* must be 1-8 or END.
GET_NAMES	*Port* or *FILE;NAME*	This command uploads the names of the configurations to the port specified by Port. Port must either be “1284”, “SERIAL”, “USB”, or “ETHERNET”. Alternatively, “FILE” followed by a filename NAME can be used to store the info into a file.
INFO	*Port*	This command uploads general information about the printer to the port specified by Port. Port must either be “1284”, “SERIAL”, “USB”, or “ETHERNET”. The format of the return information is discussed later in this section.
LOAD	*Cfg*	*Cfg* can be 0-8 (0=Factory). This loads configuration *Cfg*. If configuration *Cfg* was not previously saved, the operator panel will display an error message and the current configuration will not be changed.
MPI_SELECT	*MPI*	This command selects the active Management Protocol Interface (MPI). Currently there are two selections “UCP” and “PXML”. The default is PXML.

Action	Parameter	Description
NETCFG	*0 or 1*	Loads the NIC configuration: 0 = OEM Configuration, 1 = MFG Configuration
OVERLAY	*Cfg*	This command overlays the configuration data that follows on existing configuration *Cfg*. *Cfg* must be 1-8 (or END). If *Cfg* does not exist then command is treated the same as DOWNLOAD.
PANEL	*LOCK* or *UNLOCK*	Parameter "LOCK" locks the operator configuration menu. Parameter "UNLOCK" unlocks the menu and allows the operator access to the menus. By default, the menu is unlocked.
PNE_PORT	*Port*	This command selects the port that the PNE will use to communicate to the printer. The valid ports are "DISABLE", "ETHERNET", or "USB". **NOTE:** If ETHERNET is selected but not enabled, the selection will revert to DISABLE.
PNE_PORT_NUM	*Port Number*	This command sets the Ethernet Port the PNE uses to communicate if the PNE Port was set to Ethernet. **NOTE:** This causes the printer to automatically reboot.
POWERUP	*Cfg*	Sets the power-up configuration to *Cfg* and loads Configuration *Cfg*. *Cfg* can be any value from 0-8, where 0=Factory.
PRINT	*Cfg*	Print Configuration *Cfg*. *Cfg* can be a number 1-8, or one of four pre-defined configurations. The four non-numeric configurations are requested using the first character for the CURRENT, FACTORY, POWERUP, or ALL configuration(s).
PXML_PORT_NUM	*Port Number*	This command sets the Ethernet Port the PXML and UCP will use to communicate if the PXML Port is set to Ethernet. **NOTE:** This causes the printer to automatically reboot.
RESET		Reboots the printer.
SAVE	*Cfg*	*Cfg* must be 1-8. This command will save the current configuration as configuration *Cfg*. If *Cfg* is not in the range of 1-8, the command is ignored.
SETMENU	*Value;Tag*	*Tag* is the name of the menu as defined in the menu file. *Value* is the value to which the menu is to be set. This function should be used with great caution as setting an invalid *Value* could make the printer non-functional.

Action	Parameter	Description
GETMENU	*Port* *Tag1* ... *TagN*	This command uploads a set of menu values to the location *Port*. Port must either be "1284", "SERIAL", "USB", or "ETHERNET". Following a line terminator (e.g., CR+LF), a series of Tags can be listed (each separated by a line terminator) with *CONFIG-GETMENU;END* marking the end. See the example later in this Section.
SET_NAME	*Cfg*	This command downloads a name for the configuration specified by *Cfg*. *Cfg* must be 1-8.
UPLOAD	*Port;Cfg* or *FILE;Name;Cfg*	This command uploads the configuration stored in location *Cfg* to the port specified by Port. Port must either be "1284", "SERIAL", "USB", or "ETHERNET". *Cfg* may be 1-8 or ALL. Alternatively, "FILE" followed by a filename NAME can be used to store the configuration into a file.

Configuration Upload / Download

The UPLOAD and DOWNLOAD command can be used for uploading and downloading complete printer configurations. If a customer needs to configure 50 printers identically, the customer needs only configure one printer and UPLOAD the configurations. The configurations uploaded may then be sent to other printers as jobs eliminating the necessity for the operator to configure each printer manually.

The UPLOAD command will always place a header and footer into the uploaded data. This header will be the DOWNLOAD command followed by the configuration number. The footer will be the DOWNLOAD END command. The operator should be aware that the UPLOAD and DOWNLOAD commands use a secondary copy of the menu structure which does not affect the printer's active configuration. This allows the UPLOAD and DOWNLOAD commands to operate without affecting the printer's current configuration.

If the operator intends to use one of the configurations after downloading, the operator should reboot the printer to ensure proper operation. This can be accomplished by adding the RESET command as the last command in your setup file. This is necessary because the printer caches the active configuration. Rebooting the printer ensures that the desired configuration is correctly read from FLASH.

NOTE: While an upload or download is in progress, the Front Panel will be unavailable.

INFO Return Status

The INFO command returns a collective set of the information about the printer state in the following format:

```
!PTX_SETUP
CONFIG-INFO
MODEL;<Model Name>
PROGRAM VERSION;<Program File Version>
PROGRAM FILE; <Program File Number>
SERIAL NUMBER;<Serial Number of Printer>
DPI;<203, 300, or 600>
RFID;<1=Present, 0=Not Installed>
ODV;<1=Present, 0=Not Installed>
GPIO;<1=Present, 0=Not Installed>
```

```
PTX_END
```

GETMENU Command and Return Data

The GETMENU command is formed to allow the user to name a set of menus to be returned back to the host system per the following format example, sending the results back through the host network:

```
!PTX_SETUP
CONFIG-GETMENU;ETHERNET
igpswitch
serbaud
CONFIG-GETMENU;END
PTX_END
```

The results coming back through the network host would look something like this:

```
!PTX_SETUP
CONFIG-GETMENU
igpswitch;2
serbaud;3
CONFIG-GETMENU;END
PTX_END
```

FILE_IO Commands

!PTX_SETUP

FILE_IO–*Action*;*Parameter*

PTX_END

Table 28. PTX_SETUP FILE_IO Commands

Action	Parameter	Description
CAPTURE	*Filename*	When *Filename* is provided, this begins capturing all incoming data into given *Filename*. This file will be targeted for the DRIVE (see below) supplied. When all data to be captured has been received, this same command should be sent without the *Filename* parameter to terminate the capture process and commit the data to a specified drive.

Action	Parameter	Description
CERTTYPE	*Filename;Type*	When a Network Certificate file is downloaded using the FILE_IO CAPTURE. The certificate type will be set. The types available are: **MQTT** MC - CA Certificate PC - Printer Certificate PK - Private Key FS - File Store **802.1x** SP - Printer Certificate SK - Private Key SC - CA Certificate
DEL	*Filename*	The DEL action will mark *Filename* as deleted.
DRIVE	*Letter*	The drive letter chooses between the Flash File System, SD Card, or USB drive (if available). No drive letter or the drive letter A selects the Flash File System. The drive letter B selects the SD card, letter D selects the USB drive if available.
DUMPFILE	*File;Prop; Size*	When *File* is provided, space is reserved based on the *Size* parameter. The parameter PROPS is the four-byte value that specifies the file properties. When all data to be captured has been received, this same command should be sent without the parameters to terminate the capture process and commit the data to the original *File*.
OPTIMIZE		Causes the printer to optimize the Flash File System. The printer automatically reboots during this process.
PROPS	*File;Prop*	The PROPS action will set the file properties of a given file. The file properties are a four letter, case sensitive file descriptor. The properties field can be used to ensure that a file is used for its intended purpose. Once properties have been associated with a file, they cannot be changed.
RUNFILE	*File;Prop*	The RUNFILE action will open the file named *File* for printing. After the PTX_END command is processed, the contents of *File* will get printed before any more data is read from the host. If the *Prop* field is present, RUNFILE will verify that *Prop* matches the saved file properties. Any mismatch will cause the command to be ignored.
UPLOAD	*File;Port*	Reads the file named *File* out of the flash file system and sends it to a host computer via the Port I/O port. Port is either “1284”, “SERIAL”, “USB”, or “ETHERNET”.

When a file is opened for writing with the FILE_IO–CAPTURE;*Filename* command, the system will allocate RAM for file control blocks as needed. If the file already exists on the Flash File System and the *System > Flash File Edit > Overwrite Files* menu is set to disable, a warning will be displayed on the front panel. After

clearing the warning, the file data will be printed. To overwrite the existing file, set the Overwrite Files option to enable.

Due to the nature of writing files, the data is first stored into RAM. As a result, the printer must have sufficient available RAM. If the printer is not able to allocate enough RAM, a warning will be displayed on the front panel.

None of the captured file data will be committed to flash until the entire file is loaded and the terminating command “FILE_IO–CAPTURE” is received. Receipt of the command will cause all file data to be written to the drive targeted with the “FILE_IO-DRIVE” command. Any errors with this process will result in a front panel warning message.

Example to store file “Test.bmp” to Flash:

```
!PTX_SETUP
FILE_IO-DRIVE;A
FILE_IO-CAPTURE;Test.bmp
PTX_END
<data>
<data>
<data>
!PTX_SETUP
FILE_IO-CAPTURE
PTX_END
```

NOTE: Lack of available flash memory might be due to files that have been deleted but the flash space has not been reclaimed. Such flash can be reclaimed by using the *System > Flash File Edit > Optimize & Reboot* function.

NOTE: After selecting the Optimize & Reboot function, do not shut off the printer's power until after the printer returns to the power-on state. Loss of power during the optimize process may corrupt the printer's program. If this occurs, first attempt to repeat the downloading process. If that fails, contact an authorized service representative.

ENGINE Commands

!PTX_SETUP

ENGINE–*Action*;*Parameter*

PTX_END

Table 29. PTX_SETUP ENGINE Commands

Action	Parameter	Description
ALM_WIDE	*wide width*	Set the Auto Label Mapping *wide width* (units of 1/1000”; e.g., a *wide width* value of 1000 = 1”), which represents the width of the image in the file sent from the host which is to be auto label mapped into several labels, each of which will have a width of *narrow width*. #labels = *wide width/narrow width* (rounded down)

Action	Parameter	Description
ALM_NARROW	*narrow width*	Set the Auto Label Mapping *narrow width*, which represents the width of one auto mapped label (in units of 1/1000"; e.g., a *narrow width* value of 1000 = 1"). This width should be set prior to the *wide width*. In addition, it can never exceed the physical width of the printer. If it does, the *narrow width* will be automatically reduced to the *Media* > *Image* > *Label Width* value set in the configuration menu.
ALM_ENABLE	*N* *W* *	Set Auto Label Mapping to Narrow, Wide, or Off. Enter "N" for Narrow, "W" for Wide, or any other letter to disable ALM. By default, only the Narrow option is implemented.
EJECT		Performs a Form Feed.
IMAGE_SHFT_H	*Value*	Shifts the image *Value* horizontally in 1/1000" units. If *Value* is out of range with the panel menu *Media* > *Image* > *Horizontal Shift* , the command will be ignored.
IMAGE_SHFT_V	*Value*	Shifts the image *Value* vertically in 1/1000" units. If *Value* is out of range with the panel menu *Media* > *Image* > *Vertical Shift* , the command will be ignored.
LENGTH	*Value*	Sets the *Media* > *Image* > *Label Length* using 1/1000" units.
MEDIA_HANDLING	*Value*	Sets the type of media handling: 0 - Continuous 1 - Tear-Off Strip 2 - Tear-Off (Not Available on T800/T4000) 7 - Peel-Off 8 - Cut
MIRROR	*Value*	Value of 0 turns mirroring off, non-zero turns mirroring on.
MODE	*X* *D*	Parameter "X" sets the print mode to Thermal Transfer, parameter "D" sets to Direct Thermal.
ODV	*1*	Enables the ODV unit so that ODV begins verifying printed barcodes.
OVERSTRIKE	*0*	Requests the printer to back up one form (as defined by the *Form Length*) and then print out an overstrike pattern. This command should only be used if the *Validator* > *Control* > *Validator Action* is set to *Retry Form.*
WIDTH	*Value*	Sets the *Media* > *Image* > *Label Width* using 1/1000" units.

RFID Commands

!PTX_SETUP

RFID–*Action*;*Parameter*

PTX_END

NOTE on Action EPC_LENGTH:

Extreme caution should be used when utilizing this command. In normal circumstances, calibrating tags requires only using the “Run Calibration” menu. When tags are calibrated, the maximum sizes of the various RFID banks (including the EPC bank) are automatically set based on the silicon type detected. The values determined by the calibration should not be changed. Emulation commands can read or write any EPC length that is less than or equal to the maximum EPC length without changing this value.

There is only one circumstance where a user might want to set this value: if during calibration a warning message is displayed on the control panel that the silicon type was not recognized, the maximum EPC length can be manually set with this command if known. If the silicon type in the tags being used does not support a length as long as the maximum length set by this command, all subsequent read and write tag operations will fail.

Table 30. PTX_SETUP RFID Commands

Action	Parameter	Description
EPC_LENGTH	*Bit Length*	Sets the maximum length of the EPC bank in bits.
OVERSTRIKE_REPORT	*ON* or *OFF*	Enables/disables reporting of RFID overstrikes to the host. The default is OFF (disabled).
STATISTICS_REPORT	*ON* or *OFF*	Enables/disables reporting of RFID statistics to the host. The default is OFF (disabled).
STATISTICS_CLEAR		Clears the RFID statistics.
GET_STATISTICS		Returns the RFID statistics values as shown below
RFID_CAL		Executes the RFID calibration procedure. This will take a few minutes. After the calibration completes, information is returned in the same format as with RFID_LASTCAL.
RFID_LASTCAL		Return information about the last RFID calibration in the form shown in the section below.
GET_CALINFO		Return expanded information about the last RFID calibration in the form shown in the section below. This command returns all of the same information as returned by RFID_LASTCAL in addition to some extra pieces of information about the calibration results, including the currently chosen operation order.

Action	Parameter	Description
SET_OPORDER	*RFID_DURING_PRINT, RFID_BEFORE_PRINT, or RFID_AFTER_PRINT*	Sets the Operation Order in the RFID Calibration Params menu to Encode Before Print, Encode During Print, or Encode After Print. No all operation orders are legal for all tag types. If an operation order is not legal for the currently calibrated tag type, the setting will be ignored. Success in changing the setting can be confirmed with the GET_CALINFO command.
SET_LABELRETRY	*Number of Retries*	Sets the number of retries in the “Label Retry” menu. This number represents the number of successive tags that will be overstruck due to failed RFID operations before a fault is declared on the control panel
SET_ERRHANDLE	*RFID_ERR_NONE, RFID_ERR_STOP, or RFID_OVERSTRIKE*	Changes the value of the “Error Handling” RFID menu to None, Stop, or Overstrike mode.
GET_RFIDCONTROL		Returns information about items in the RFID control menu including the number of retries and the RFID error handling mode. It returns information in the form shown in the section below.

The GET_STATISTICS information that is returned to the host is with this format:

```
!PTX_SETUP
RFID-GET_STATISTICS
TID;<TID>
RFID TAGS PASSED;<Number of Tags with all RFID Passed>
WRITE TAGS FAIL;<Number of Tags Failed Due To Write Operation>
READ TAGS FAIL;<Number of Tags Failed Due To Read Operation>
LOCK TAGS FAIL;< Number of Tags Failed Due To Lock Operation>
PTX_END
```

The RFID_LASTCAL information that is returned to the host is with this format:

```
!PTX_SETUP
RFID_LASTCAL-INFO
TID;<TID>
FORM LENGTH;<xx.yy inches>
POSITION;<xx.yy inches>
WRITE POWER;<Power Setting>
READ POWER;<Power Setting>
PTX_END
```

The GET_CALINFO information that is returned to the host is with this format:

```
!PTX_SETUP
RFID-GET_CALINFO
TID;<TID>
POSITION;<xx.yy inches>
BASE POS;<xx.yy inches>
READ POWER;<Power Setting>
WRITE POWER;<Power Setting>
ANTENNA;<0 for external antenna and 1 for internal antenna>
TID;<TID that identifies silicon in calibrated tags>
USR SIZE;<Size of USR Bank on calibrated tags>
EPC SIZE;<Size of EPC Bank on calibrated tags>
OPERATION ORDER;<Operation Order>
PTX_END
```

The GET_STATISTICS information that is returned to the host is with this format:

```
!PTX_SETUP
RFID-GET_RFIDCONTROL
ERROR HANDLING;<RFID Error Handling Mode>
LABEL RETRY;<Number of Label Retries>
PTX_END
```

ODV-2D Commands

!PTX_SETUP

ODV–*Action*;*Parameter*

PTX_END

Table 31 PTX_SETUP Commands for ODV-2D

Action	Parameter	Description
GRAPHICS	*ON or 1* *OFF or 0*	When enabled, search graphics within the job for barcodes. Otherwise, ignore the graphics and only process the barcode command from the emulations.
ORIENT	*ALL* *PICKET* *LADDER*	Choose the orientations of the barcodes to process.
SKIP	*0 = OFF* *1-9999 = #* *> 9999 = ON*	Skip a certain number of labels from ODV2D processing. If zero, no labels will be skipped (ignored). If 1-9999, this number of labels will be skipped. Numbers > 9999 will result in indefinite skipping of labels.
CODE39	*ON or 1* *OFF or 0*	When enabled, Code 39 barcodes will be processed. Otherwise, they will be ignored on the label.

Action	Parameter	Description
CODE128	*ON or 1* *OFF or 0*	When enabled, Code 128 barcodes will be processed. Otherwise, they will be ignored on the label.
INT2/5	*ON or 1* *OFF or 0*	When enabled, Interleaved 2/5 barcodes will be processed. Otherwise, they will be ignored on the label.
CODE93	*ON or 1* *OFF or 0*	When enabled, Code 93 barcodes will be processed. Otherwise, they will be ignored on the label.
CODABAR	*ON or 1* *OFF or 0*	When enabled, Codabar barcodes will be processed. Otherwise, they will be ignored on the label.
UPC/EAN	*ON or 1* *OFF or 0*	When enabled, UPC and EAN barcodes will be processed. Otherwise, they will be ignored on the label.
PDF417	*ON or 1* *OFF or 0*	When enabled, PDF417 barcodes will be processed. Otherwise, they will be ignored on the label.
MICRO417 (FUTURE)	*ON or 1* *OFF or 0*	When enabled, Micro PDF417 barcodes will be processed. Otherwise, they will be ignored on the label.
DATAMATRIX	*ON or 1* *OFF or 0*	When enabled, Data Matrix barcodes will be processed. Otherwise, they will be ignored on the label.
QR	*ON or 1* *OFF or 0*	When enabled, QR barcodes will be processed. Otherwise, they will be ignored on the label.
AZTEC (FUTURE)	*ON or 1* *OFF or 0*	When enabled, Aztec barcodes will be processed. Otherwise, they will be ignored on the label.
ZONE	*SYMB;* *X1;Y1* *X2;Y2* *ROT;MIN* *ROW;COL*	Allows a barcode that is pre-printed on the label to be included for the ODV-2D to validate. The parameters are as follows: *SYMB* = Symbology (same strings as used in the Action list above) *X1;Y1* = Upper left-hand corner in 1/1000 inches. *X2;Y2* = Lower right-hand corner in 1/1000 inches. *ROT* = “NOR”, “CCW”, “CW”, or “INV” *MIN* = Minimum bar size in 1/1000” inches *ROW* = Data Matrix rows *COL* = Data Matrix columns

Misc Commands

LP MODE Commands

!PTX_SETUP

LPMODE;*Parameter*

PTX_END

Action	Parameter	Description
n/a	Protocol	*Protocol* must be 0-4. This command resets the software protocol, and is selected as follows: 0 - P-Series 1 - P-Series XQ 2 - Serial Matrix 3 - Proprinter III XL 4 - Epson FX-1050

NIC_SETUP Commands

!PTX_SETUP

NIC_SETUP

<NIC setup command>

<NIC setup command>

<NIC setup command>

END_NIC_SETUP

PTX_END

NIC setup is for advanced users only and requires using commands as described in the Ethernet User's Manual. Here is an example below:

```
!PTX_SETUP
NIC_SETUP
store net tcp opts -zeroiparp
store ifc from default
store ifc 2 wlan ssid ap1231_vl1_open
store pping opts enable
store pping packet 2
store pping period 2
END_NIC_SETUP
PTX_END
```

GPIO Commands

!PTX_SETUP

GPIO–*Action*;*Parameter*

PTX_END

Action	Parameter	Description
EVENT	*Value*	Triggers a GPIO event by the *Value* given. Valid event numbers range from 0-65535.

PRINTJOB Commands

!PTX_SETUP

PRINTJOB–*Action*;*Parameter*

PTX_END

Action	Parameter	Description
START	*jobID*	Start of job marker. Results in a “start of job” message sent back to host through the PPM port when a job starts printing.
END	*jobID*	End of job marker. Results in a “end of job” message sent back to host through the PPM port when the job finishes printing.

F Quick Change Memory Card (QCMC)

Overview

The QCMC provides the ability to duplicate an entire printer's firmware, saved configurations, and custom files quickly through the printer's control panel with a user friendly interface. No external host or files are needed to transfer this information to the QCMC. A "snapshot image" is saved of the printer's firmware, configuration settings, and custom files. The saved image can be copied to any number of printers using the same QCMC so that the printers will be identically configured (assumes same printer hardware and options are present).

The QCMC has its own resident network MAC address that will be used in place of the printer's LAN/WLAN MAC address when the card is left installed in a printer. This allows a mission critical printer to be exchanged quickly with a spare printer that will be identically configured, including the network MAC address.

The following are examples of how the QCMC may make printer management more convenient:

- A site has 10 printers to install that should all be configured identically. Rather than inputting the information through the control panel individually to each printer, insert the QCMC into the first printer, capture the changes, and then easily share the image with the other nine printers.
- A site is adding additional printers and wants them configured the same as the printers already installed, but is unsure what changes were originally made. By using the QCMC to capture the exact image of the older printers, no custom settings will be missed.
- A printer is set up on a network that is configured to only allow recognized MAC addresses to access the network. If the printer with the QCMC installed needs repair and must be removed from the network, the MAC that resides on the QCMC can be easily transferred to the replacement printer, along with all the configuration information and any other files stored as the "snapshot image" on the QCMC, making the replacement printer an exact duplicate for the downed printer. By using the MAC address that resides on the QCMC, the replacement printer can be installed without notifying the network administrator, thereby simplifying the exchange.

Installing the QCMC

CAUTION **You must power off the printer before you install or remove the QCMC, or you may damage the QCMC and the printer. If you remove the QCMC after powering on the printer with the QCMC installed, the fault message "SD REMOVED Reboot Printer" will display. You cannot clear this message by reinserting the QCMC. You must cycle power.**

1. Set the printer power switch to O (Off).
2. Insert the QCMC SD card into the QCMC slot on the back of the printer.

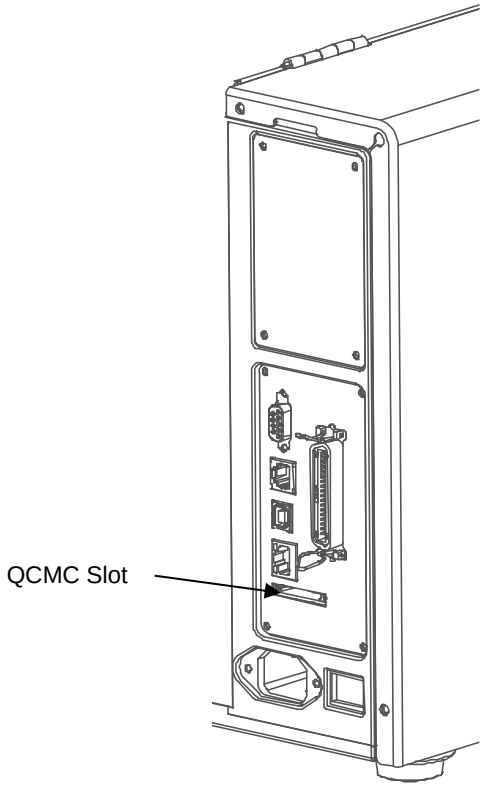

Figure 18 QCMC Slot on Back of Printer

Saving the Printer's Configuration to the QCMC

NOTE: The MAC address residing on the QCMC will be used in place of the MAC assigned to the printer's own network card whenever the QCMC is installed. If you do not want to identify the printer with this MAC address, make sure the QCMC is removed from the printer before attaching the printer to the network.

When the printer software detects the presence of a QCMC at power-up, a check of the QCMC will be performed to determine if there is already a saved flash image available. If no printer flash image exists on the QCMC, the software will then check to see if there are any saved configurations in the printer. If the QCMC is blank (no flash image) and saved configurations are detected in the printer, then the user will be prompted with a message on the front panel to save the printer's configuration to the QCMC as shown below.

NOTE: This screen will appear every time at power-up until the printer's flash is saved to the QCMC.

If the RIGHT ARROW key is pressed, the printer will reboot into normal operation and not save any information to the QCMC. On subsequent power-ups the Save message, shown above, will display again.

When the ENTER key is pressed, the printer will not go ONLINE, but instead will copy the printer's entire flash image to the QCMC, creating a snapshot of the printer's memory.

Below is a list of items that will be saved to the QCMC:

- Printer Program File (software)
- Custom configurations (1–8)
- Feature files or CST's that have been downloaded on the printer.
- All variable settings from the printer's NVRAM
- Network settings including IP Address
- Other user files, such as fonts, bitmaps, or graphics files downloaded to the printer.

While the printer is saving its QCMC settings to the SD card, the following message will display. This could take a few minutes to complete.

WARNING **During this process, do not turn off the power. The time it takes to complete the process depends on the amount of information in flash and may take longer when large user files are included.**

Upon successful completion of saving a flash image to the QCMC, the printer will display a message indicating the operation is complete as shown in the following figure. The printer will then reboot into normal operation.

In the unlikely case there is not enough space on the SD to save the entire flash image, you will be prompted with a message “NOT ENOUGH SPACE ON SD / Delete SD File”. This is a fatal error and requires user intervention:

- Cycle power on the printer.
- When prompted to save the QCMC select the RIGHT ARROW key to skip. The printer will then boot normally and go ONLINE.
- Go OFFLINE and find the *System > SD File Edit > Delete SD Files* menu.
- Delete unnecessary SD files then try the QCMC Save operation again.

Copying the QCMC “Snapshot” Image to a Second Printer

Always power off the printer before removing or inserting the QCMC. Place the QCMC into the second printer’s memory slot. Upon power up, the printer software detects the presence of a QCMC and a check of the QCMC will be performed to determine if there is already a saved flash image from this QCMC on the printer. If no, the following screen will display:

NOTE: This message will appear every time at power-up until the QCMC settings are copied to the printer.

If the RIGHT ARROW key is pressed, the printer will reboot into normal operation and not copy any information to the printer. On subsequent power-ups the Copy message above will display again if the QCMC remains installed in the printer.

IMPORTANT: **If the QCMC remains installed in the printer, the MAC address onboard will be used in place of the resident MAC address to the printer’s LAN/WAN interface card.**

When the ENTER key is pressed, the printer will not go ONLINE immediately, but will copy the contents of the QCMC to the flash memory, creating a clone of the original printer. Before the copy process is allowed to continue, the printer hardware will be checked. If the printer hardware is incompatible with the QCMC contents, the screen shown below will be displayed, and the printer will not copy any settings.

This means that the QCMC is not compatible with the printer's software or hardware. A software upgrade is required, or a different configured QCMC will be needed.

A QCMC validation check will also be performed to ensure the data stored on the SD is not corrupted. If the test fails the following fault message will display.

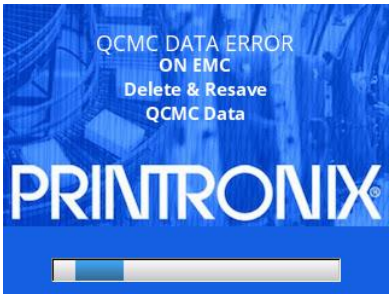

This means that the data on the QCMC was not saved properly, and must be deleted then resaved. Follow the instructions for deleting files, and then repeat the copying process.

If all the checks pass, then the printer will copy the files from the QCMC to the target printer. While this copy is in progress, the following message will be displayed.

Upon successful completion, the printer will display the following message on the front panel and reboot into normal operation.

IMPORTANT: **When the copy is completed and the printer reboots, the user should run auto-calibration to make sure the configuration changes are used in the calibration process.**

Updating the QCMC Image

This option should only be used when a QCMC image has previously been stored from the target printer. If some configuration settings have been altered from that point, the menu *System > SD File Edit > QCMC Update* can be used to update the configuration settings in the image stored on the QCMC.

Below is a list of items that will be updated on the QCMC by the **QCMC Update** operation:

- Custom configurations (1–8)
- All variable settings from the printer's NVRAM
- Network settings including IP Address

Below is a list of items that will NOT be updated on the QCMC by the **QCMC Update** operation:

- Printer Program File (software)
- Feature files or CST's that have been downloaded on the printer.
- Other user files, such as fonts, bitmaps, or graphics files downloaded to the printer.

While the printer is updating the QCMC configuration, the following message will display.

WARNING **During this process, do not turn off the power.**

Upon successful completion of saving a flash image to the QCMC, the printer will display a message indicating the operation is complete. The printer will then reboot into normal operation.

Erasing the QCMC Image

This option should only be used when a QCMC has already been stored and when the user desires to start fresh with a new image.

To utilize this option, navigate to the menu *System > SD File Edit > QCMC Erase* and press the ENTER key. When this option is activated, all QCMC files and configurations will be deleted from the SD card.

While the printer is erasing the QCMC configuration, the following message will display. This could take several minutes.

WARNING **During this process, do not turn off the power.**

Upon successful completion of saving a flash image to the QCMC, the printer will display a message indicating the operation is complete. The printer will then reboot into normal operation.

G Custom Configuration Module (CCM)

Overview

You can make a standard SD card or USB drive into a **Custom Configuration Module** (CCM) that can be used to configure an unlimited number of printers one at a time. The programmed CCM can contain any combination of printer firmware (program file), a feature file, a CST, downloadable fonts and forms, NIC configurations, customer files, and PTX_SETUP config files.

The CCM is made using the PSA File Utility to create a set of configuration files (CCMLOAD.xxx, CCMHOST.000) that are copied onto an SD card or USB drive. Once the **CCM Package** of files is copied, the SD card or USB drive can be used to identically configure an unlimited number of printers (one by one). The list of files that can be loaded onto a CCM are shown in the table below:

Content	Max Files	Headers	File Origin
Program File *	1	Y	Printronix Firmware (e.g., P300768.exe)
Feature File	1	Y	Printronix Feature File (e.g., P300774.exe)
CST File	1	Y	PNE Suite CST Manager
GPIO File	1	Y	PNE Suite GPIO Manager
Fonts	25	Y	TrueTypes or Intellifonts
File System	25	Y	Custom Files, Logos, Forms
Network Config	1	N	Telnet Commands to setup Network
Emulation Setup	25	N	Emulation Commands for Initialization
Printer Config	1	N	PTX-SETUP config file via PNE Suite

* A program file is always required for a valid CCM. See CCM Content Description for complete details.

Creating a CCM Package

Creating a **CCM Package** is easy using the **PSA File Utility** which is available on our company's website.

Run the **PSA File Utility** and then execute the Custom Config Module section as follows:

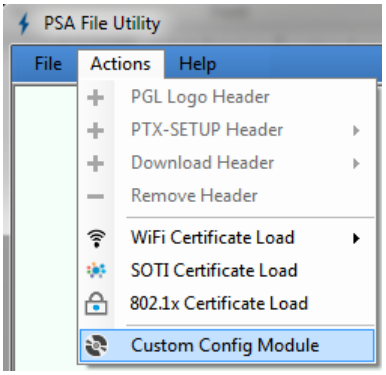

This will bring up a **Create CCM** dialog window. From there, highlight items in the list with the *left* mouse button and use the *right* mouse button to choose an option:

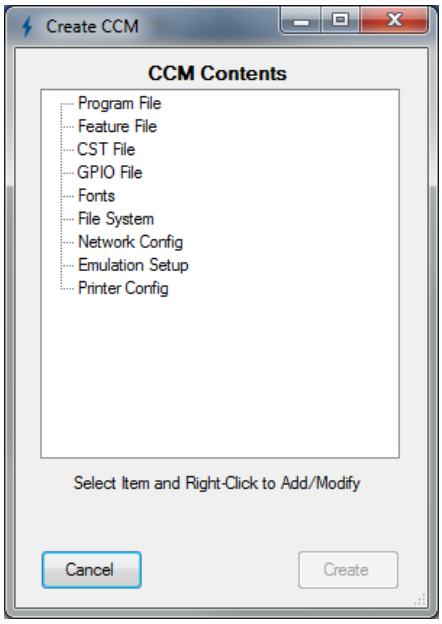

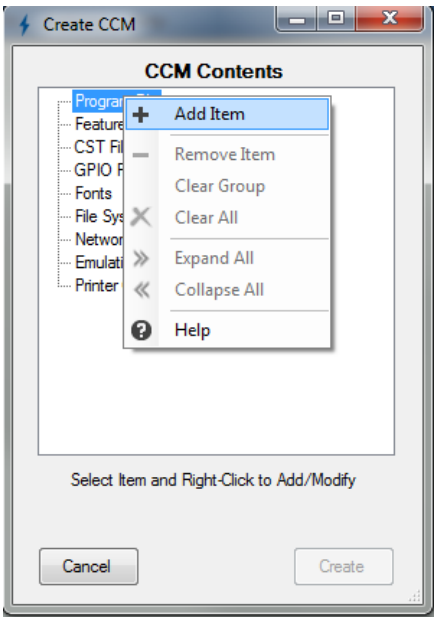

Some customizations will only allow one selection, while others will allow multiple selections. In the case that an (.exe) is selected for the Program or Feature File, the user will be prompted to have the files executed (unzipped) prior to adding them to the customization file.

For Fonts and Templates, the customization file requires a download header. If the selected file does not contain a download header and it is required, the user will be prompted to add one. For other cases like the CST and GPIO files, those headers are create ONLY by the PNE Suite and any attempt to include files that do not contain proper headers will be rejected. See CCM Content Description below for complete details.

Once the CCM content tree is complete, the **Create** button asks the user to choose a directory to store the configuration package. This directory can be the target SD card or USB drive or another directory. The configuration files created (CCMHOST.000 and CCMLOAD.000-CCMLOAD.xxx) must all be copied onto the target SD card or USB drive before use.

IMPORTANT *When creating the new CCM Package, any existing CCM files (CCMHOST.000 and CCMLOAD.000-CCMLOAD.xxx) in that directory will be deleted.*

Configuring Printers

CAUTION **You must power off the printer before you install or remove the SD card or USB drive. Do not remove the SD card or USB drive until prompted by the printer when the CCM update has been completed.**

1. Set the printer power switch to O (Off).
2. Insert the SD card or USB drive with the CCM file package into the printer.
3. Hold down the **UP** arrow key.
4. Turn the printer power on and release the **UP** arrow key when you hear a beep or see the LEDs flash.
5. After the printer powers-up, the following message will be displayed on the front panel:

NOTE: If the printer reports the CCM is empty, then it could not find the CCMLOAD.xxx files on the SD card or USB drive. Turn off the printer and check the contents of the SD card or USB drive. Also make sure the SD card or USB drive are properly inserted.

6. When the **ENTER** key is pressed, the printer will start the configuration process.

IMPORTANT *Do NOT power off the printer until the process is complete. This may require an additional 1-2 reboots depending on the content.*

7. When the process completes the printer will display one of the following messages on the front panel:

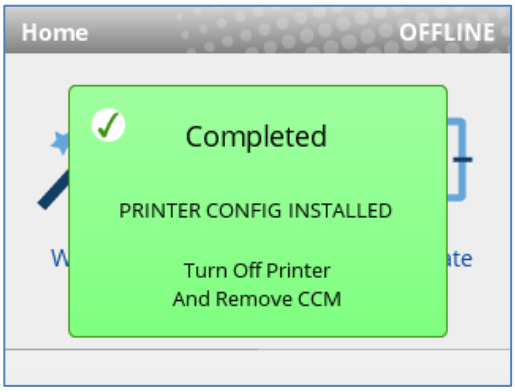

NOTE: The printer may reboot during the configuration process, this is normal. Do NOT interrupt the printer until it displays one of the messages above.

8. Turn off the printer and remove the CCM. This process can be repeated on any number of printers.

Printer Firmware Compatibility

A CCM can be created for use on Printronix Auto ID T6000e printer. If you are using older printer code (see list below), you can create a CCM using only an SD card. Newer printer code supports either an SD card or USB CCM.

<u>Firmware revisions below this level only support SD card – newer revisions support both</u>

FILE,PRGM,PTX,T6e,COMBO	V1.13E	P301008

CCM Content Description

Program File and Feature File

Program Files and Feature Files are created by Printronix and have part numbers starting with **P3** (e.g., **P3**00998). These files are provided as a zipped (.exe) file that can be executed on a Windows Command shell or linux shell (unzip XXXXX.exe). This will extract either a program file (.prg) or a feature file (.fls, .dwn) which contains the headers necessary to store the information into the printer when in download mode.

The **PSA File Utility** will accept either the extracted file or the (.exe) directly as input. If the (.exe) is provided, the CCM feature will perform the extraction for the user.

The most recent printer firmware releases can be found on our company's website.

CST and GPIO Files

CST and GPIO files are created within the PrintNet Enterprise Suite available at no cost from our company's website.. The PNE Suite has two utilities called the CST Manager and GPIO Manager, respectively that can save the files with all the necessary headers. The CST Manager saves files as (.bnd) and the GPIO Manager as (.gpf).

Fonts and File System

As the table shows, some files require headers. The headers are a 256-byte prefix with information on how/where to store the data within the printer file system. For Font and Template selections the 256-byte header (if not already present) can be added separately with the **PSA File Utility** or at the time when the raw files are included within the CCM. Users will be prompted to create the headers automatically if the files supplied do not have headers. Up to 25 (each) files can be added.

PGL Forms and Logos

Storing PGL forms or logos using this method can be tricky because the data stored in the File System for a PGL logo or form is not the same content as when these items were originally sent to the printer using the ;DISK parameter. Forms and Logos loaded using this method must have 256-byte headers that apply *.frm (forms) or *.lgo (logos). Furthermore, the content cannot include the ;DISK parameter. The recommended method of loading PGL forms and logos are using the Emulation Setup section.

Network Config File

The Network Config is a series of PrintNet internal command shell (npsh) commands explained in the PrintNet Ethernet User's Manual available from our company's website. The internal commands must be wrapped within a PTX-SETUP construct as shown below:

```
!PTX_SETUP
NIC_SETUP
store net tcp opts -zeroiparp
store ifc from default
store ifc 2 wlan ssid ap1231_vl1_open
store pping opts enable
store pping packet 2
store pping period 2
END_NIC_SETUP
PTX_END
```

This file is created manually by the user and typically stored with an extension (.ncg) to easily identify its purpose. It is the responsibility of the user to verify the content is correct.

WARNING: Be sure the NIC Config File does not contain a “reset” command. This would prematurely force a reboot and the CCM functionality may not work properly.

Emulation Setup

Emulation Setup files do not require headers. They are optional and interpreted by the emulations when the CCM Package is installed. The order of these files added determines the order by which the emulations will receive and interpret them. This type of file might be useful in order to run a job that stores emulation forms and logos into the flash file system, so they are available at power-up.

For example, a PCX or TIFF logo could be converted to a PGL logo to be stored in Flash using the **Actions > PGL Logo Header** function in the PSA File Utility. That resulting file could then be added to this section to download the logo to Flash memory. Similarly, a PGL form with the **CREATE** command and **;DISK** parameter could be added to store that PGL form into Flash memory.

This emulation commands should not include anything that prints data because this is specifically for setup purposes. Furthermore, because the printer configuration has not yet been configured, the emulation commands **MUST** be consistent with the Factory default configuration (e.g., PGL as the Active IGP Emulation).

PTX-SETUP Printer Config

The **Printer Config** is an optional part of the CCM Package to be used to store configuration and setup the power-up configuration setting. The configuration is in the form of a PTX-SETUP file that is best generated by PNE Suite to accurately represent the entire configuration, using internal menu identifiers.

If the configuration setup is consistent with the Factory, then this content can be omitted. The steps to create a Printer Config are the following:

1. Load a target printer with the Program File firmware to be used with the CCM.
2. Start PNE Suite.
3. Use the Configuration Editor to upload the configuration from the printer.
4. Modify the Configuration as needed with the Configuration Editor.
5. Save the Configuration as a PTX-SETUP file (.ptx).

H Customer Support

Printronix Auto ID Customer Support Center

IMPORTANT **Please have the following information available prior to calling the Printronix Customer Support Center:**

- Model number
- Serial number (located on the back of the printer)
- Installed options (i.e., interface and host type if applicable to the problem)
- Configuration printout: *Printing a Configuration* page 61
- Is the problem with a new install or an existing printer?
- Description of the problem (be specific)
- Good and bad pictures that clearly show the problem (faxing or emailing of these pictures may be required)

Americas	(844) 307-7120 Service@PrintronixAutoID.com
Europe, Middle East, and Africa	+31 24 3030340 EMEA_support@PrintronixAutoID.com
Asia Pacific	+886 3 990 6155 APAC_support@PrintronixAutoID.com
China	+86 755 2398 0479 CHINA_support@PrintronixAutoID.com

Corporate Offices

TSC / Printronix Auto ID
3040 Saturn Street, Suite
200, Brea, CA 92821
U.S.A.

Phone: (844) 307-7120
Fax: (657) 258-0817

TSC / Printronix Auto ID, EMEA Head Office
Georg-Wimmer-Ring 8b
D-85604 Zorneding, Germany

Phone: +49 (0) 8106 37979-000
Email: EMEA_Sales@PrintronixAutoID.com

TSC / Printronix Auto ID, Asia Pacific Head Office
Taiwan
9F, No. 95, Minquan Rd.
Xindian Dist., New Taipei City
231 Taiwan (R.O.C)

Phone: +886 3 990 6155
Fax: +886 3 990 6215

TSC / Printronix Auto ID, China Head Office
Shenzhen
New World Center 2510 room
No. 6009, Yitian road
Futian District, Shenzhen
518000
China

Phone: +86 755 2398 0479
Fax: +86 755 2398 0773

Visit the TSC | Printronix Auto ID website at

Asia / Pacific:	https://apac.tscprinters.com/en
Europe:	https://emea.tscprinters.com/en
North America:	https://usca.tscprinters.com/en
Latin America:	https://latam.tscprinters.com/en
India:	https://in.tscprinters.com/en
China:	https://www.chinatsc.cn/SC/

I Glossary

Baud (rate)	Baud Rate is the number of information bits that can be transmitted between the printer and the computer in one second. For example, one baud equals one bit per second in a series of binary signals. Both the printer and the computer must be configured to the same baud rate.
BIT	Binary digIT. A digit in the binary number system, represented by a 0 or a 1. A bit is the smallest unit of storage in a digital computer.
Boot-up	The start-up procedure which causes a computer operating system to be loaded into main memory.
Buffer	An area of storage into which data is read or written temporarily during data transfers.
Configuration	Refers to the operating properties that define how the printer responds to signals and commands received from the host computer at the printer interface. These properties are called configuration parameters and are set to match the operating characteristics of the host computer system.
Continuous Media	Media comprised of one continuous length without a gap, notch, hole, or black mark to establish a predetermined label or tag length. With this media type, the Host Form Length or user-selected Label Length sets the desired length of each label.
Handling Mode	A media handling mode that advances media in the forward direction only.
Controller	An independent functional logic unit in a data processing system that controls data paths between one or more units of peripheral equipment.
Data Bits	Binary information sent to the printer; a character set grouping containing letters, digits, and punctuation marks to be printed.

Default	A value, parameter, attribute, or option that is assigned by a program or system when another has not been specified by the user.
Diagnostic	Pertaining to the detection and isolation of a printer malfunction or mistake.
Direct Thermal Media	Media coated with special chemicals that act as an accelerator, acceptor dye, and binder. In Direct Thermal mode, the heat from the selected rectangular elements in the thermal printhead makes direct contact with the media (no ribbon is used) and causes a chemical reaction that creates the image on the media.
Direct Thermal Printing	A printing method in which no ribbon is used to transfer data from the printhead to the media to create an image. The thermal printhead selectively heats small rectangular elements which make direct contact with the coated media.
DRAM	Dynamic Random Access Memory. Can be read from or written to at any time. DRAM is volatile: whatever is in DRAM is lost when power is turned off.
Fanfold Media	Media supplied in a fanfold stack instead of a roll format.
Flash Memory	Printer configurations, programs, downloaded files, and fonts are stored in Flash Memory. Data in Flash are not lost when power is turned off (Resident fonts are fonts permanently stored in Flash and availalbe at any time, via software commands.)
Font	A collection of printing characteristics for printing alphanumeric characters, all of which combine to produce a distinctive style of print.
Host Computer	The computer that stores, processes, and sends data to be printed, which communicates directly with the printer. The term “host” is used to indicate the controlling computer, since modern printers are themselves microprocessor-controlled computer systems.
Interface	The hardware component used to link two devices by common physical interconnection, signal, and functional characteristics.
IPS	The speed at which the media is printed based on a rate of Inches-Per-Second.

Label Liner (backing)	The material labels are attached to during their manufacturing process. Attachment is usually accomplished with an adhesive. After printing, labels can be easily removed from the liner and the liner discarded or recycled.
Label Taken Sensor	A sensor located at the front of the printer to detect the presence of a label extended out the front of the printer. The sensor is used only during Peel-Off Media Handling to sense a label and then detect its removal prior to printing the next label.
Media	Material onto which data is printed by the printer. The types of media supported by the printer are die-cut labels or tag stock, supplied in roll or fanfold format. Media is further described by the type of sensing used to detect the Top-of-Form position based on the label length indicators used. Transmissive (Gap) media uses a liner gap, notch, or hole between labels, and Reflective (Mark) media uses a horizontal black mark located on the underside of the tag stock or label liner. Continuous media (with no label length indicators) uses no sensing method, and the operator determines which label length is desired.
Media Sensor	The sensor used to detect the presence of media in the paper path as well as the gap, notch, or hole position of Transmissive media or the horizontal black mark on Reflective media.
Memory	See RAM, Nonvolatile Memory, DRAM, and Flash Memory.
Nonvolatile Memory	Nonvolatile memory stores variables that must be preserved when the printer is turned off, such as configuration parameters and printer usage statistics.
NVRAM	Acronym of Nonvolatile Random-Access Memory. See Nonvolatile Memory.
Parity (check)	Parity checking is the addition of a non-data bit to data, resulting in the number of “1 bits” being either always even or always odd. Parity is used to detect transmission errors. Parity represents value in the check digit of the received or transmitted data.
PCBA	Printed Circuit Board Assembly. A PCB with components (ICs, resistors, capacitors, etc.) installed.

PGL	Intelligent Graphics Printing software for the Printronix Graphics Language, designated for Printronix printers. PGL provides online forms, barcodes, and many alphanumeric text-generation capabilities and is compatible with earlier versions of Printronix PGL protocol and programming.
Pitch (RFID)	In the RFID industry, pitch is defined as the distance from one point on an inlay to the same point on the next inlay.
Port	A data channel used for receiving data from or transmitting data to one or more external devices.
Protocol	The rules and conventions that govern communication between a printer and a host computer. A protocol includes codes for printing text and graphics and codes instructing the printer to perform special operations.
RAM	Random-Access Memory. Also called “main memory” or “working memory.” It is the active memory of the printer into which programs are loaded. RAM is saved to volatile memory because data in RAM is lost when power is turned off or interrupted.
Reflective Sensing	Use of the lower media sensor only to transmit and receive infrared light off the underside of media to detect gaps, notches, holes, or horizontal black marks used for determining the Top-of-Form position on labels or for indicating a Paper Out condition.
Resolution	A measure expressing the number of component units in a given range used to create an image; in printing, expressed as the number of dots per inch (dpi) horizontally and vertically.
RFID Encoder	The RFID (Radio Frequency Identification) encoder programs smart labels (tags with embedded inlays).
Roll Media	Media supplied in a roll format, usually wound on a 1-inch or 3-inch cardboard core. The T6000e media hanger assembly accepts both core sizes.
Gap/Mark Sensor = Mark:	The Sensed Distance value is the physical distance from the leading edge of one black mark to the leading edge of the next.
SD Card	A small removable device used to store data. The SD Card is used for fonts purchased from Printronix and the QCMC (Quick Change Memory Card) option.

Slew	Vertical paper movement.
Standard-Pitch RFID Labels	Labels with RFID inlays that typically have a pitch from 2.0 to 6.0 inches. These labels support encoding of the tag and provide ample space to print text, graphics, barcodes, or logos.
Stop Bits	The signal which indicates the end of a character or element.
Thermal Transfer Media	Media specifically designed to work with a ribbon for image transfer. In Thermal Transfer mode, compatibility between the ribbon and the media is critical in producing a high quality, long lasting image.
Thermal Transfer Printing	A printing method in which the printhead presses a specially coated ribbon against the media. The printhead elements react with the ribbon and bond the image to the media.
Transmissive Sensing	Use of the upper media sensor to transmit infrared light through the top of media which is then received by the lower media sensor to detect gaps, holes, or notches for determining the Top-of-Form position on labels or for indicating a Paper Out condition.

J Communication Notices and Warranties

This information was developed for products and services offered in the U.S.A.
Printronix may not offer the products, services, or features discussed in this document in other countries. Consult your Printronix representative for information on the products and services currently available in your area. Any reference to an Printronix product, program, or service is not intended to state or imply that only that Printronix product, program, or service may be used. Any functionally equivalent product, program, or service that does not infringe any Printronix intellectual property rights may be used instead. However, it is the user's responsibility to evaluate and verify the operation of any non- Printronix product, program, or service.
Printronix may have patents or pending patent applications covering subject matter described in this document. The furnishing of this document does not give you any license to these patents. You can send license inquires, in writing, to:

Printronix Auto ID Technology, Inc.
3040 Saturn Street, Suite 200
Brea, CA 92821 U.S.A.

The following paragraph does not apply to the United Kingdom or any other country where such provisions are inconsistent with local law:
PRINTRONIX PROVIDES THIS PUBLICATION "AS IS" WITHOUT WARRANTY OF ANY KIND, EITHER EXPRESS OR IMPLIED, INCLUDING, BUT NOT LIMITED TO, THE IMPLIED WARRANTIES OF NON-INFRINGEMENT, MERCHANTABILITY OR FITNESS FOR A PARTICULAR PURPOSE. Some states do not allow disclaimer of express or implied warranties in certain transactions, therefore, this statement may not apply to you.
This information could include technical inaccuracies or typographical errors. Changes are periodically made to the information herein; these changes will be incorporated in new editions of the publication. Printronix may make improvements and/or changes in the product(s) described in this publication at any time without notice.
Any references in this information to non-Printronix Web sites are provided for convenience only and do not in any manner serve as an endorsement of those Web sites. The materials at those Web sites are not part of the materials for this Printronix product and use of those Web sites is at your own risk.
Any performance data contained herein was determined in a controlled environment. Therefore, the results obtained in other operating environments may vary significantly. Some measurements may have been made on development-level systems and there is no guarantee that these measurements will be the same on generally available systems. Furthermore, some measurement may have been estimated through extrapolation. Actual results may vary. Users of this document should verify the applicable data for their specific environment.
Information concerning non-Printronix products was obtained from the suppliers of those products, their published announcements or other publicly available sources. Printronix has not tested those products and cannot confirm the accuracy of performance, compatibility or any other claims related to non-Printronix products. Questions on the capabilities of non-Printronix products should be addressed to the suppliers of those products.

Printronix Auto ID Technology, Inc warrants to the purchaser that under normal use and service, this printer (excluding the thermal printhead) purchased hereunder shall be free from defects in material and

workmanship for a period of one year from the date of shipment from Printronix. In the United States and Canada, the printer warranty provides a 1-year return-to-factory warranty which commences on the date of shipment from Printronix. Costs of shipping to be borne by the purchaser.

Consumable items such as media and ribbons are not covered under this warranty. This warranty does not cover equipment or parts that have been misused, altered, or used for purposes other than those for which they were manufactured. This warranty also does not cover loss, shipping damage, damage resulting from accident or damages resulting from unauthorized service.

Note!

Before using this information and the product it supports, read the information and *Communication Statements* below.

If you are viewing this information softcopy, the photographs and color illustrations may not appear.
For online versions of this book, we authorize you to:
Copy, modify, and print the documentation contained on the media, for use within your enterprise, provided you reproduce the copyright notice, all warning statements, and other required statements on each copy or partial copy.
Transfer the original unaltered copy of the documentation when you transfer the related Printronix product (which may be either machines you own, or programs, if the program's license terms permit a transfer). You must, at the same time, destroy all other copies of the documentation.
You are responsible for payment of any taxes, including personal property taxes, resulting from this authorization.
Your failure to comply with the terms above terminates this authorization. Upon termination, you must destroy your machine readable documentation.

Communication Statements

Federal Communications Commission (FCC) Statement

This equipment has been tested and found to comply with the limits for a Class A digital device, pursuant to Part 15 of the FCC Rules. These limits are designed to provide reasonable protection against harmful interference when the equipment is operated in a commercial environment. This equipment generates, uses, and can radiate radio frequency energy and, if not installed and used in accordance with the instructions, may cause harmful interference to radio communications. Operation of this equipment in a residential area is likely to cause harmful interference in which case the user will be required to correct the interference at his own expense.

Properly shielded and grounded cables and connectors must be used in order to meet FCC emission limits. Printronix is not responsible for any radio or television interference caused by using other than recommended cables and connectors or by unauthorized changes or modifications to this equipment. Unauthorized changes or modifications could void the user's authority to operate the equipment.
This device complies with Part 15 of the FCC Rules. Operation is subject to the following two conditions: (1) this device may not cause harmful interference, and (2) this device must accept any interference received, including interference that may cause undesired operation.

This product may contain an intentional radiator as shown below.

RFID Radio Module:

- Operating Frequency: 866-868MHz or 902 to 928 MHz
- Typical RF Power: 25 to 100 mW
- Maximum RF Power: 1 Watt under abnormal conditions

WiFi 802.11a/b/g/n Radio Module:

- Operating Frequency: 2.412 – 2.484 GHz, 4.9 to 5.845Ghz
- Typical RF Power: 2dBm

European Union Conformity

This product is in compliance with the EU directives for safety, EMC, ROHS, REACH, and WEEE. A Declaration of Conformity is available from our company's website.

Printronix cannot accept responsibility for any failure to satisfy the protection requirements resulting from a non-recommended modification of the product, including the fitting of non-Printronix option cards.
This product has been tested and found to comply with the limits for Class A Information Technology Equipment according to European standard EN 55032. The limits for Class A equipment were derived for commercial and industrial environments to provide reasonable protection against interference with licensed communication devices.

WARNING

This is a Class A product. In a domestic environment this product may cause radio interference in which case the user may be required to take adequate measures.

Properly shielded and grounded cables and connectors must be used in order to reduce the potential for causing interference to radio and TV communications and to other electrical or electronic equipment. Printronix cannot accept responsibility for any interference caused by using other than recommended cables and connectors.

Industry Canada Compliance Statement

This Class A digital apparatus complies with Canadian ICES-003.

Cet appareil numérique de la classe A conform á la norme NMB-003 du Canada.

Statement of CISPR 32 Compliance

Attention: This is a Class A Product. In a domestic environment this product may cause radio interference in which case the user may be required to take adequate measures.

German Conformity Statement

Handbuchtexte: FCC class A entspricht: EMVG Klasse A

Text Für alle in Deutschland vertriebenen EN 55032 Klasse A Geräte:

Zulassungsbescheinigung laut dem Deutschen Gesetz über die elektromagnetische Verträglichkeit von Geräten (EMVG) (bzw. der EMC EG Richtlinie 2014/30/EU):

Dieses Gerät ist berechtigt in Übereinstimmung mit dem Deutschen EMVG das EG-Konformitätszeichen - CE - zu führen. Verantwortlich für die Konformitätserklärung nach Paragraph 5 des EMVG ist die:

Printronix Auto ID Technology
Georg-Wimmer-Ring 8b D-85604
Zorneding, Germany

Informationen in Hinsicht EMVG Paragraph 4 Abs. (1) 4:

Das Gerät erfüllt die Schutzanforderungen nach EN 55024 und EN 55032 Klasse A.

EN 55032 Klasse A Geräte müssen mit folgendem Warnhinweis versehen werden: “Warnung: dies ist eine Einrichtung der Klasse A. Diese Einrichtung kann im Wohnbereich Funkstörungen verursachen; in diesem Fall kann vom Betreiber verlangt werden, angemessene Maßnahmen durchzuführen und dafür aufzukommen.”

EN 55024 Hinweis:

Wird dieses Gerät in einer industriellen Umgebung betrieben (wie in EN 55024 festgelegt), dann kann es dabei eventuell gestört werden. In solch einem Fall ist der Abstand bzw. die Abschirmung zu der industriellen Störquelle zu öergrvßern.

Anmerkung:

Um die Einhaltung des EMVG sicherzustellen sind die Geräte, wie in den Printronix Handbüchern angegeben, zu installieren und zu betreiben.

Korea

Class A

(Broadcasting Communication Equipment for Office Use)

As an electromagnetic wave equipment for office use (Class A), this equipment is intended to use in other than home area. Sellers or users need to take note of this.

A 급 기기
(업무용 방송통신기자재)
이 기기는 업무용 (A 급) 전자파적합기기로서 판매자 또는 사용자는 이 점을 주의하시기 바라며 , 가정외의 지역에서 사용하는 것을 목적으로 합니다 .

CAUTION:

This product is equipped with a 3-wire power cord and plug for the user’s safety. Use this power cord in conjunction with a properly grounded electrical outlet to avoid electrical shock

China

Declaration:

This is a Class A product. In a domestic environment this product may cause radio interference in which case the user may need to perform practical actions.

此为A级产品。在生活环境中，该产品可能会造成无线电干扰。在这种情况下，可能需要用户对其干扰采取切实可行的措施。

海拔高度和非热带性

气候声明

仅适用于海拔 2000M 以下地区安全使用

Software License Agreement

Your printer contains, among other software, Printronix operating software including, but not limited to the Embedded Configurable Operating System (the “eCos Software”) as embedded software. The terms of this Agreement apply only to the eCos Software, and all other embedded software supplied with the printer. You accept the terms of this Agreement by your initial use of your printer.

1. **Object Code License**

Printronix grants you a nonexclusive license to use the Printronix Software, the eCos Software and all other embedded software (collectively, the “Embedded Software” or the “Software”) only in conjunction with the printer. As the rightful possessor of the printer, you may make a reasonable number of copies of the Software as necessary for backup, configuration, and restoration of the printer. You must reproduce the copyright notice and any other legend of ownership on each copy of the Software you make.

You may transfer possession of the Software and its media to another party only with the transfer of the printer on which the Software is used. If you do so, you must give the other party a copy of these terms and provide all user documentation to that party. When you do so, you must destroy any copies of Software not resident in the printer.

Your license for the Software terminates when you no longer rightfully possess the printer. No other rights under this license are granted.

2. **Source Code**

A source code version of eCos Software is available under the terms of a modified version of the GNU General Public License (GPL) located under PCM eCos 3.0 from our company’s website. Printronix Auto ID grants no rights whatsoever in the source code for the Printronix Auto ID Software.

3. **No. Warranty**

THE EMBEDDED SOFTWARE IS PROVIDED UNDER THIS LICENSE ON AN “AS IS” BASIS, WITHOUT WARRANTY OF ANY KIND, EITHER EXPRESSED OR IMPLIED, INCLUDING, WITHOUT LIMITATION, WARRANTIES THAT THE EMBEDDED SOFTWARE IS FREE OF DEFECTS, MERCHANTABLE, FIT FOR A PARTICULAR PURPOSE OR NON-INFRINGING. THE ENTIRE RISK AS TO THE QUALITY AND PERFORMANCE OF THE EMBEDDED SOFTWARE IS WITH YOU. SHOULD ANY OF THE EMBEDDED SOFTWARE PROVE DEFECTIVE IN ANY RESPECT, YOU (NOT RED HAT, PRINTRONIX, ANY OTHER CONTRIBUTOR OR ANY DISTRIBUTOR) ASSUME THE COST OF ANY NECESSARY SERVICING, REPAIR OR CORRECTION. THIS DISCLAIMER OF WARRANTY CONSTITUTES AN ESSENTIAL PART OF THIS LICENSE. NO USE OF ANY OF THE EMBEDDED SOFTWARE IS AUTHORIZED HEREUNDER EXCEPT UNDER THIS DISCLAIMER.

4. **Conflicting Terms**

You agree that this Agreement provides you no more rights with regards to warranty, support, indemnity or liability terms with respect to Printronix Inc, or any contributor to the Embedded Software than that provided by any express warranty that may be made by Printronix, Inc.

5. **Limitation of Liability**

UNDER NO CIRCUMSTANCES AND UNDER NO LEGAL THEORY, WHETHER TORT (INCLUDING NEGLIGENCE), CONTRACT OR OTHERWISE, SHALL RED HAT, PRINTRONIX, ANY OTHER CONTRIBUTOR, OR ANY DISTRIBUTOR OF THE EMBEDDED SOFTWARE, OR ANY PART THEREOF, OR ANY SUPPLIER OF ANY OF SUCH PARTIES, BE LIABLE TO YOU OR ANY OTHER PERSON FOR ANY INDIRECT, SPECIAL, INCIDENTAL, OR CONSEQUENTIAL DAMAGES OF ANY CHARACTER INCLUDING, WITHOUT LIMITATION, DAMAGES FOR LOSS OF GOODWILL, WORK STOPPAGE, COMPUTER FAILURE OR MALFUNCTION. OR ANY AND ALL OTHER COMMERCIAL DAMAGES OR LOSSES, EVEN IF SUCH PARTY SHALL HAVE BEEN INFORMED OF THE POSSIBILITY OF SUCH DAMAGES. THIS LIMITATION OF LIABILITY SHALL NOT APPLY TO LIABILITY FOR DEATH OR PERSONAL INJURY RESULTING FROM SUCH PARTY’S NEGLIGENCE TO THE EXTENT APPLICABLE LAW PROHIBITS SUCH LIMITATION. SOME JURISDICTIONS DO NOT ALLOW

THE EXCLUSION OR LIMITATION OF INCIDENTAL OR CONSEQUENTIAL DAMAGES SO THAT EXCLUSION AND LIMITATION MAY NOT APPLY TO YOU.

6. **U.S. Government Users**

The Embedded Software is a “commercial item,” as that term is defined in 48 C.F.R. 2.101 (Oct 1995), consisting of “commercial computer software” and “commercial computer software documentation,” as such terms are used in 48 C.F.R 12.212 (Sept. 1995). Consistent with 48 C.F.R. 12.212 and 48 C.F.R. 227.7202-1 through 227.7202-4 (June 1995), all U.S. Government End Users acquire Covered Code with only those rights set forth herein.

7. **Miscellaneous**

This Agreement represents the complete agreement concerning subject matter hereof. If any provision of this Agreement is held to be unenforceable. This Agreement shall be governed by California law provisions (except to the extent applicable law, if any, provides otherwise), excluding its conflict-of-law provisions.

8. **eCosSoftware**

eCos is free software; you can redistribute it and/or modify it under the terms of the GNU General Public License as published by the Free Software Foundation, version 2 or a later.

eCos is distributed WITHOUT ANY WARANTY, without even the implied warranty of MERCHANT ABILITY or FITNESS FOR A PARTICULAR PURPOSE. See the GNU General Public License for more details.

You should receive a copy of the GNU General Public License along with eCos. If not, write to:

Free Software Foundation, Inc.
59 Temple Place, Suite 330
Boston, MA 02111-1307 USA.

As special exception, if other files instantiate templates or use macros or inline functions from this file, you could compile this file and link it with other works to produce work based on this file. This file does not by itself cause the resulting work to be covered by the GNU General Public License. However, the source code for this file must be made available in accordance with section (3) of the GNU General Public License.

This exception does not invalidate any other reasons why work based on this file might be covered by the GNU General Public License.

Alternative licenses for eCos may be arranged by contacting Red Hat, Inc. at http://sources.redhat.com/ecos/ecos-license/

eCos

eCos, the Embedded Configurable Operating System
Copyright © 1998, 1999, 2000, 2001, 2002, 2003 Red Hat, Inc.
Copyright © 2002, 2003 John Dallaway
Copyright © 2002, 2003 Nick Garnett
Copyright © 2002, 2003 Jonathan Larmour
Copyright © 2002, 2003 Andrew Lunn
Copyright © 2002, 2003 Gary Thomas
Copyright © 2002, 2003 Bart Veer
Copyright © 1982, 1986, 1991, 1993 The Regents of the University of California. All rights reserved.
© Unix System Laboratories, Inc.

All or some portions of this file are derived from material licensed to the Unversity of California by American Telephone and Telegraph Co. or Unix System Laboratories, Inc. and are reproduced herein with the permission of UNIX System Laboratories, Inc.
Copyright © 1995, 1996, 1997, and 1998 WIDE Project. All rights reserved.
Copyright © 2000 Brian Somers
Copyright © 1998 The NetBSD Foundation, Inc. All rights reserved. Copyright © 1997 Niklas

Hallqvist. All rights reserved.
Copyright © 1998 Stephen Deering
Copyright © 1992, 1993 The Regents of the Unversity of California. All rights reserved.

This code is derived from software contributed to Berkeley by Stephen Deering of Stanford Unversity. Portions of eCos code are distributed under several BSD style licenses. Other portions of eCos code are distributed under the terms of the GNU General Public License with a non-copyleft exception with allows static links to non-copyleft programs.

Open SSL

Copyright © 1998-2004 The Open SSL Project. All rights reserved.
This product includes software developed by the OpenSSL Project for use in the OpenSSL Toolkit (http://www.openssl.org/)

Copyright © 1995-1998 Eric Young. All rights reserved.
OpenSSL is distributed under the terms of the Open SSL and SSLeay licenses, which are both BSD style open source licenses.

OpenSSL License

The OpenSSL toolkit stays under a dual license, i.e. both the conditions of the OpenSSL License and the original SSLeay license apply to the toolkit.

See below for the actual license texts. Actually both licenses are BSD-style Open Source licenses. In case of any license issues related to OpenSSL please contact openssl-core@openssl.org.

Copyright (c) 1998-2011 The OpenSSL Project. All rights reserved.

Redistribution and use in source and binary forms, with or without modification, are permitted provided that the following conditions are met:

1. Redistributions of source code must retain the above copyright notice, this list of conditions and the following disclaimer.
2. Redistributions in binary form must reproduce the above copyright notice, this list of conditions and the following disclaimer in the documentation and/or other materials provided with the distribution.
3. All advertising materials mentioning features or use of this software must display the following acknowledgment: "This product includes software developed by the OpenSSL Project for use in the OpenSSL Toolkit. (http://www.openssl.org/).
4. The names "OpenSSL Toolkit" and "OpenSSL Project" must not be used to endorse or promote products derived from this software without prior written ermission. For written permission, please contact openssl-core@openssl.org.
5. Products derived from this software may not be called "OpenSSL" nor may "OpenSSL" appear in their names without prior written permission of the penSSL Project.
6. Redistributions of any form whatsoever must retain the following acknowledgment: "This product includes software developed by the OpenSSL Project for use in the OpenSSL Toolkit (http://www.openssl.org/)"

THIS SOFTWARE IS PROVIDED BY THE OpenSSL PROJECT ``AS IS'' AND ANY

EXPRESSED OR IMPLIED WARRANTIES, INCLUDING, BUT NOT LIMITED TO, THE IMPLIED WARRANTIES OF MERCHANTABILITY AND FITNESS FOR A PARTICULAR PURPOSE ARE DISCLAIMED. IN NO EVENT SHALL THE OpenSSL PROJECT OR ITS CONTRIBUTORS BE LIABLE FOR ANY DIRECT, INDIRECT, INCIDENTAL, SPECIAL, EXEMPLARY, OR CONSEQUENTIAL DAMAGES (INCLUDING, BUT NOT LIMITED TO, PROCUREMENT OF

SUBSTITUTE GOODS OR SERVICES; LOSS OF USE, DATA, OR PROFITS; OR BUSINESS INTERRUPTION) HOWEVER CAUSED AND ON ANY THEORY OF LIABILITY, WHETHER IN CONTRACT, STRICT LIABILITY, OR TORT (INCLUDING NEGLIGENCE OR OTHERWISE) ARISING IN ANY WAY OUT OF THE USE OF THIS SOFTWARE, EVEN IF ADVISED OF THE POSSIBILITY OF SUCH DAMAGE.

This product includes cryptographic software written by Eric Young (eay@cryptsoft.com). This product includes software written by Tim Hudson (tjh@cryptsoft.com).

Original SSLeay License

Copyright (C) 1995-1998 Eric Young (*eay@cryptsoft.com*)
All rights reserved.

This package is an SSL implementation written by Eric Young (*eay@cryptsoft.com*). The implementation was written so as to conform with Netscapes SSL.

This library is free for commercial and non-commercial use as long as the following conditions are aheared to. The following conditions apply to all code found in this distribution, be it the RC4, RSA, lhash, DES, etc., code; not just the SSL code. The SSL documentation included with this distribution is covered by the same copyright terms except that the holder is Tim Hudson (tjh@cryptsoft.com).

Copyright remains Eric Young's, and as such any Copyright notices in the code are not to be removed.
If this package is used in product, Eric Young should be given attribution as the author of the parts of the library used.
This can be in the form of a textual message at program startup or in documentation (online or textual) provided with the package.

Redistribution and use in source and binary forms, with or without modification, are permitted provided that the following conditions are met:

1. Redistributions of source code must retain the copyright notice, this list of conditions and the following disclaimer.
2. Redistributions in binary form must reproduce the above copyright notice, this list of conditions and the following disclaimer in the documentation and/or other materials provided with the distribution.
3. All advertising materials mentioning features or use of this software must display the following acknowledgement:
   "This product includes cryptographic software written by
   Eric Young (eay@cryptsoft.com)"
   The word 'cryptographic' can be left out if the routines from the
   library being used are not cryptographic related :-).
4. If you include any Windows specific code (or a derivative thereof) from the apps directory (application code) you must include an acknowledgement: "This product includes software written by Tim Hudson (tjh@cryptsoft.com)"

THIS SOFTWARE IS PROVIDED BY ERIC YOUNG ``AS IS'' AND ANY EXPRESS OR IMPLIED WARRANTIES, INCLUDING, BUT NOT LIMITED TO, THE IMPLIED WARRANTIES OF MERCHANTABILITY AND FITNESS FOR A PARTICULAR PURPOSE ARE DISCLAIMED. IN NO EVENT SHALL THE AUTHOR OR CONTRIBUTORS BE LIABLE FOR ANY DIRECT, INDIRECT, INCIDENTAL, SPECIAL, EXEMPLARY, OR CONSEQUENTIAL DAMAGES (INCLUDING, BUT NOT LIMITED TO, PROCUREMENT OF SUBSTITUTE GOODS OR SERVICES; LOSS OF USE, DATA, OR PROFITS; OR BUSINESS INTERRUPTION) HOWEVER CAUSED AND ON ANY THEORY OF LIABILITY, WHETHER IN CONTRACT, STRICT LIABILITY, OR TORT (INCLUDING NEGLIGENCE OR OTHERWISE) ARISING IN ANY WAY OUT OF THE USE OF THIS SOFTWARE, EVEN IF ADVISED OF THE POSSIBILITY OF SUCH DAMAGE.

The licence and distribution terms for any publically available version or derivative of this code cannot be changed. i.e. this code cannot simply be copied and put under another distribution licence [including the GNU Public Licence.]

WPA Supplicant License

Copyright (c) 2003-2013, Jouni Malinen <j@w1.fi> and contributors. All Rights Reserved.

This program is licensed under the BSD license (the one with advertisement clause removed). Redistribution and use in source and binary forms, with or without modification, are permitted provided that the following conditions are met:

1. Redistributions of source code must retain the above copyright notice, this list of conditions and the following disclaimer.
2. Redistributions in binary form must reproduce the above copyright notice, this list of conditions and the following disclaimer in the documentation and/or other materials provided with the distribution.
3. Neither the name(s) of the above-listed copyright holder(s) nor the names of its contributors may be used to endorse or promote products derived from this software without specific prior written permission.

THIS SOFTWARE IS PROVIDED BY THE COPYRIGHT HOLDERS AND CONTRIBUTORS "AS IS" AND ANY EXPRESS OR IMPLIED WARRANTIES, INCLUDING, BUT NOT LIMITED TO, THE IMPLIED WARRANTIES OF MERCHANTABILITY AND FITNESS FOR A PARTICULAR PURPOSE ARE DISCLAIMED. IN NO EVENT SHALL THE COPYRIGHT OWNER OR CONTRIBUTORS BE LIABLE FOR ANY DIRECT, INDIRECT, INCIDENTAL, SPECIAL, EXEMPLARY, OR CONSEQUENTIAL DAMAGES (INCLUDING, BUT NOT LIMITED TO, PROCUREMENT OF SUBSTITUTE GOODS OR SERVICES; LOSS OF USE, DATA, OR PROFITS; OR BUSINESS INTERRUPTION) HOWEVER CAUSED AND ON ANY THEORY OF LIABILITY, WHETHER IN CONTRACT, STRICT LIABILITY, OR TORT (INCLUDING NEGLIGENCE OR OTHERWISE) ARISING IN ANY WAY OUT OF THE USE OF THIS SOFTWARE, EVEN IF ADVISED OF THE POSSIBILITY OF SUCH DAMAGE.

Brian Gladman AES Library

This library, written by Brian Gladman (http://www.gladman.me.uk/), contains code for implementing encryption and decryption for AES (Rijndael) for block and key sizes of 16, 24 and 32 bytes. The firmware contains a version of the library, taken from the following URL:

http://www.opensource.apple.com/source/xnu/xnu-1504.9.37/bsd/crypto/aes/

Copyright (c) 2003, Dr Brian Gladman, Worcester, UK. All rights reserved.

LICENSE TERMS

The free distribution and use of this software in both source and binary form is allowed (with or without changes) provided that:

1. distributions of this source code include the above copyright notice, this list of conditions and the following disclaimer;

2. distributions in binary form include the above copyright notice, this list of conditions and the following disclaimer in the documentation and/or other associated materials;

3. the copyright holder's name is not used to endorse products built using this software without specific written permission.

ALTERNATIVELY, provided that this notice is retained in full, this product may be distributed under the terms of the GNU General Public License (GPL), in which case the provisions of the GPL apply INSTEAD OF those given above.

```
DISCLAIMER

This software is provided 'as is' with no explicit or implied warranties
in respect of its properties, including, but not limited to, correctness
and/or fitness for purpose.
```

Artifex Portions Software Copyright Notices

Portions Copyright © 2001/2009 Artifex Software Inc.This software is based in part on the work of the Independent JPEG Group.Portions Copyright © 1998 Soft Horizons.All Rights Reserved.

Google Font Open Sans

The Google Font “Open Sans” is used in the product for purposes of the front panel display only. Open Sans is a humanist sans serif typeface designed by Steve Matteson, Type Director of Ascender Corp. This version contains the complete 897 character set, which includes the standard ISO Latin 1, Latin CE, Greek and Cyrillic character sets. Open Sans was designed with an upright stress, open forms and a neutral, yet friendly appearance. It was optimized for print, web, and mobile interfaces, and has excellent legibility characteristics in its letterforms.

The source is https://www.google.com/fonts/specimen/Open+Sans and is licensed to Printronix under the terms of the Apache License, Version 2.0 described at http://www.apache.org/licenses/LICENSE-2.0.html.

Copyright [yyyy] [name of copyright owner]

Licensed under the Apache License, Version 2.0 (the "License"); you may not use this file except in compliance with the License. You may obtain a copy of the License at

http://www.apache.org/licenses/LICENSE-2.0

Unless required by applicable law or agreed to in writing, software distributed under the License is distributed on an "AS IS" BASIS, WITHOUT WARRANTIES OR CONDITIONS OF ANY KIND, either express or implied. See the License for the specific language governing permissions and limitations under the License.

Cousine Font

The Cousine Font is a monospaced font used in the product for purposes of the front panel display only. The source is found at http://www.fontsquirrel.com/fonts/list/classification/monospaced and is licensed to Printronix under terms of the Apache License, Version 2.0 described at http://www.apache.org/licenses/LICENSE-2.0.html.

Copyright [yyyy] [name of copyright owner]

Licensed under the Apache License, Version 2.0 (the "License"); you may not use this file except in compliance with the License. You may obtain a copy of the License at

http://www.apache.org/licenses/LICENSE-2.0

Unless required by applicable law or agreed to in writing, software distributed under the License is distributed on an "AS IS" BASIS, WITHOUT WARRANTIES OR CONDITIONS OF ANY KIND, either

express or implied. See the License for the specific language governing permissions and limitations under the License.

ZINT Software

ZINT was originally developed by Robin Stuart and licensed under the terms of the GPL (Gnu Public License). In 2013 Robin Stuart and all developers that contributed to the code agreed to change the license to a less restrictive one (see ZINT mailing list of May 2013 for related mails) under the following conditions:

- The names of original copyright holder Robin Stuart and contributors are not removed, neither from sources nor from the manual
- The documentation is done in British English (as Robin said: "Oh, and please don't replace the word "colour" with "color" in the documentation - that really annoys me!")

Change to BSD-license is done for backend and therefore for ZINT shared library only, for the frontends and Qt4-backend the GPL is still valid. Since BSD-license is GPL-compatible this gives the possibility to include ZINT library in own products or link against it from own software.

Limited Software Product Warranty

Printronix Auto ID Technology, Inc. warrants that for ninety (90) days after delivery, the Software will perform in accordance with specifications published by Printronix Auto ID Technology, Inc. Printronix Auto ID Technology, Inc. does not warrant that the Software is free from all bugs, errors and omissions.

Remedy

Your exclusive remedy and the sole liability of Printronix Auto ID Technology, Inc. in connection with the Software is replacement of defective software with a copy of the same version and revision level.

Disclaimer of Warranties and Limitation of Remedies

1. THE PARTIES AGREE THAT ALL OTHER WARRANTIES, EXPRESS OR IMPLIED, INCLUDING WARRANTIES OF FITNESS FOR A PARTICULAR PURPOSE AND MERCHANTABILITY ARE EXCLUDED. Printronix Auto ID Technology, Inc. does not warrant that the functions contained in the Software will meet your requirements or that the operation of the Software will be uninterrupted or error free. Printronix Auto ID Technology, Inc. reserves the right to make changes and/or improvements in the Software without notice at any time.
2. IN NO EVENT WILL PRINTRONIX AUTO ID TECHNOLOGY, INC. BE LIABLE FOR LOST PROFITS, LOST DATA, BUSINESS INTERRUPTIONS, OR ANY OTHER DIRECT, INDIRECT, INCIDENTAL OR CONSEQUENTIAL DAMAGES ARISING OUT OF THE USE OF OR INABILITY TO USE THIS PRODUCT, EVEN IF PRINTRONIX AUTO ID TECHNOLOGY, INC. HAS BEEN ADVISED OF THE POSSIBILITY OF SUCH DAMAGES, OR ANY DAMAGES CAUSED BY THE ABUSE OR MANIPULATION OF THE SOFTWARE. SOME STATES DO NOT ALLOW THE EXCLUSION OR LIMITATION OF LIABILITY FOR CONSEQUENTIAL OR INCIDENTAL DAMAGES, SO THE ABOVE LIMITATION MAY NOT APPLY TO YOU.
3. Printronix Auto ID Technology, Inc. will not be liable for any loss or damage caused by delay in furnishing a Software Product or any other performance under this Agreement.
4. Our entire liability and your exclusive remedies for our liability of any kind (including liability for negligence except liability for personal injury caused solely by our negligence) for the Software Product covered by this Agreement and all other performance or nonperformance by us under or related to this Agreement are limited to the remedies specified by this Agreement.
5. California law governs this Agreement.

Termination of License Agreement

This License shall continue until terminated. This license may be terminated by agreement between you and Printronix Auto ID Technology, Inc. or by Printronix Auto ID Technology, Inc. If you fail to comply with the terms of this License and such failure is not corrected within thirty (30) days after notice. When this License is terminated, you shall return to the place you obtained them, the printer and all copies of the Software and documentation.

U.S. Government Restricted Rights

Use, duplication or disclosure by the government is subject to restrictions as set forth in the Rights in Technical Data and Computer Software clause at FAR 242.227-7013, subdivision (b) (3) (ii) or subparagraph (c) (1) (ii), as appropriate. Further use, duplication or disclosure is subject to restrictions applicable to restricted rights software as set forth in FAR 52.227-19 (c) (2).

Acknowledgement of Terms and Conditions

YOU ACKNOWLEDGE THAT YOU HAVE READ THIS AGREEMENT, UNDERSTAND IT, AND AGREE TO BE BOUND BY ITS TERMS AND CONDITIONS. NEITHER PARTY SHALL BE BOUND BY ANY STATEMENT OR REPRESENTATION NOT CONTAINED IN THIS AGREEMENT. NO CHANGE IN THIS AGREEMENT IS EFFECTIVE UNLESS WRITTEN AND SIGNED BY PROPERLY AUTHORIZED REPRESENTATIVES OF EACH PARTY. BY USING THIS PRINTER, YOU AGREE TO ACCEPT THE TERMS AND CONDITIONS OF THIS AGREEMENT.

Product Warranty Information

Complete product warranty information for printers, accessories, options and consumables can be found on our company's website.

P180122-000_N