BIXOLON

User's Manual

XD7-20d Series

Thermal Label Printer

Ver. 1.00

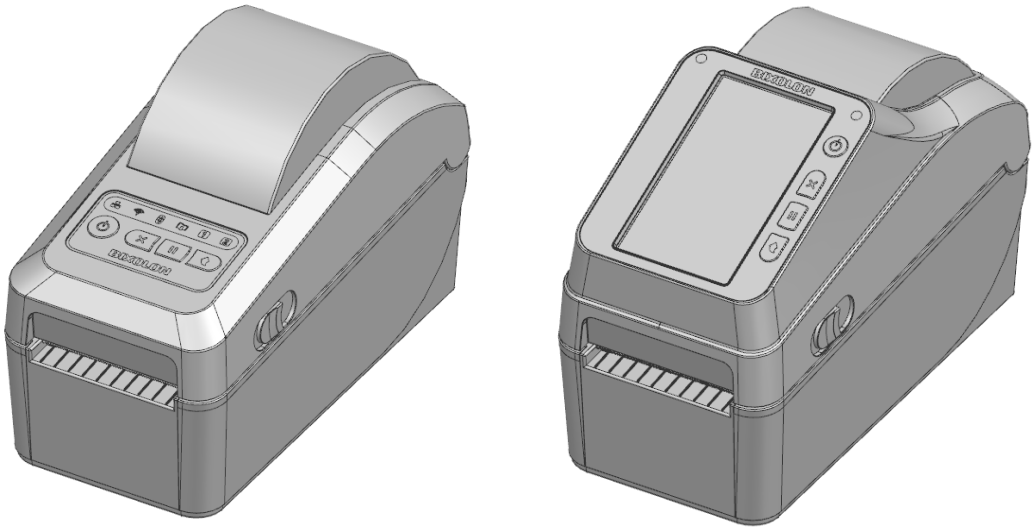

www.bixolon.com

Table of Contents

Copyright 4
WARNING & CAUTION 7
Manual Introduction 9
Printer Introduction 10

1. Content Confirmation 11

2. Product Part Names 12

3. Installation & Usage 13
3-1 Printer Installation Placings 13
3-2 Power Connection 14
3-3 Interface 16
3-3-1 Standard Interface (USB & USB HOST) 16
3-3-2 Optional Interface (Serial) 17
3-3-3 Optional Interface (Ethernet) 18
3-3-4 Optional Wireless Interface (WLAN, Bluetooth, Combo(Bluetooth & WLAN)) 19
3-3-5 Replacing Optional Interface 20
3-4 Media Installation 22
3-5 Control Panel Operating Instructions (Standard Model) 25
3-5-1 Button Operations 25
3-5-2 LED Indicator For Interface Statuses 26
3-5-3 LED Indicator For Various Printer Statuses 27
3-6 Control Panel Operating Instructions (LCD Model) 28
3-6-1 Control Panel 28
3-6-2 Detailed Descriptions 29
3-6-3 Menu Composition 33
3-6-4 Menu Select Method 37
3-6-5 Setting Confirm Method 38
3-6-6 Setting Menu Explanation 40
3-6-7 Interface Menu Explanation 44
3-6-7-1 Serial 44
3-6-7-2 Ethernet 45
3-6-7-3 WLAN 46
3-6-7-4 Bluetooth 49
3-6-8 Sensor Menu Explanation 50
3-6-9 Files Menu Explanation 51
3-6-9-1 Saved File 51
3-6-9-2 Twin Function 52
3-6-9-3 Firmware Update 57
3-6-10 Tools Menu Explanation 58
3-6-11 Info Menu Explanation 60

4. Self-test 61

5. Detailed Features 62
5-1 Stand-alone Configuration Mode 62
5-1-1 Start Stand-alone Configuration Mode and execute each function 62
5-1-2 Function List Of Stand-alone Configuration Mode 63
5-2 Pause/Cancel 64

5-2-1 Pause/Resume Function 64
5-2-2 Print Cancellation 65
5-3 Smart Media Detection 66
5-4 Gap Sensor Auto Calibration Mode 67
5-5 B/M Sensor Auto Calibration Mode 68
5-6 Media Sensor Manual-Calibration 69
5-7 Data Dump Mode 71
5-8 Factory Reset 72
5-9 SWC (Simple Wi-Fi Connect) 73
5-10 Print Standby Mode 74
5-10-1 About Print Standby Mode 74
5-10-2 How to switch the printer from Standby Mode to Print Ready Mode 74
5-11 Media Installation Method of Peeler (Option) Model 75
5-12 Using Fan-Fold or External Media 78
5-12-1 When using Fan-Fold media 78
5-13 Auto Cutter (Option) 80

6. Printer Maintenance 81
6-1 Cleaning Printer Head 81
6-2 Cleaning Sensors, Roller or/and media Path 83
6-3 Replacing Roller 85

7. Specifications 86
7-1 Printer Specifications 86
7-2 Label Types Specifications 87

Copyright

© BIXOLON Co., Ltd. All rights reserved.

This user manual and all property of the product are protected under copyright law.
It is strictly prohibited to copy, store, and transmit the whole or any part of the manual and any property of the product without the prior written approval of BIXOLON Co., Ltd.
The information contained herein is designed only for use with this BIXOLON product.
BIXOLON is not responsible for any direct or indirect damages, arising from or related to use of this information.

• The BIXOLON logo is the registered trademark of BIXOLON Co., Ltd.
• All other brand or product names are trademarks of their respective companies or organizations.

BIXOLON Co., Ltd. maintains ongoing efforts to enhance and upgrade the functions and quality of all our products.
In the following, product specifications and/or user manual content may be changed without prior notice.

Notice - EU

This wireless device is class A that is considered to be used in an industrial environment.

Caution

Some semiconductor devices are easily damaged by static electricity. You should turn the printer “OFF”, before you connect or remove the cables on the rear side, in order to guard the printer against the static electricity. If the printer is damaged by the static electricity, you should turn the printer “OFF”.

If the battery is not replaced correctly, there is a risk of fire or explosion
– replacement of a BATTERY with an incorrect type that can defeat a SAFEGUARD (for example, in the case of some lithium BATTERY types);
– disposal of a BATTERY into fire or a hot oven, or mechanically crushing or cutting of a BATTERY, that can result in an EXPLOSION;
– leaving a BATTERY in an extremely high temperature surrounding environment that can result in an EXPLOSION or the leakage of flammable liquid or gas
– a BATTERY subjected to extremely low

This product is intended for commercial or professional use only and is not intended for use in residential environments or locations where children are normally present.

Compliance information

This equipment has been tested and found to comply with the limits for a Class B digital device, pursuant to part 15 of the FCC Rules. These limits are designed to provide reasonable protection against harmful interference in a residential installation. This equipment generates, uses and can radiate radio frequency energy and, if not installed and used in accordance with the instructions, may cause harmful interference to radio communications. However, there is no guarantee that interference will not occur in a particular installation. If this equipment does cause harmful interference to radio or television reception, which can be determined by turning the equipment off and on, the user is encouraged to try to correct the interference by one or more of the following measures:
—Reorient or relocate the receiving antenna.
—Increase the separation between the equipment and receiver.
—Connect the equipment into an outlet on a circuit different from that to which the receiver is connected.
—Consult the dealer or an experienced radio/TV technician for help.

Caution: Exposure to Radio Frequency Radiation.
To comply with FCC RF exposure compliance requirements, a separation distance of at least 20 cm must be maintained between the antenna of this device and all persons.

Caution: Any Changes or modifications not expressly approved by the manufacturer could void the user's authority to operate the equipment.

Class B Digital Device: Wired Device
This Apparatus complies with class “B” limits for radio interference as specified in the Canadian department of communications radio interference regulations.
This Class B digital apparatus complies with Canadian ICES-003

Appareil numérique de classe B: appareil filaire
Get appareil est conforme aux normes class “B” d’interference radio tel que specifier par ministre canadien des communications dans les reglements d’interference radio.
Cet appareil numérique de la classe B est conform à la norme NMB-003 du Canada.

Waste Electrical and Electric Equipment (WEEE)

This marking shown on the product or its literature, indicates that is should not be disposed with other household wastes at the end of its working life, To prevent possible harm to the environment or human health from uncontrolled waste disposal, please separate this from other types of wastes and recycle it responsibly to promote the sustainable reuse of material resources. Household users should contact either the retailer where they purchased this product, or their local government office, for details of where and how they can take this item for environmentally safe recycling. Business users should contact their supplier and check the terms and conditions of the purchase contract. This product should not be mixed with other commercial wastes for disposal.

WARNING & CAUTION

It describes death, physical injuries, serious financial losses, and damage to data etc. that can be caused to the user.

Do not connect multiple products to one single power outlet. Do not connect the product to a loose power outlet.
Use only power outlets that meet the standard. Connect the power cord only to a grounded power outlet. **Noncompliance may cause electric shock or fire.**

Use only authentic products from BIXOLON. **The company will not provide post-sale support for damage or other quality issues that any fake (refurbished) products may incur.**

Do not bend or strain the power cord excessively. Push the power cord all the way into the power outlet lest it remain loose. Make sure to hold the cord tight when separating it from the power outlet. Do not remove the power cord while the product is in use.
Noncompliance may cause electric shock or fire.

Keep small accessories or other packaging materials away from young children.
Beware: children may swallow them.
Mishandling the product may incur injuries. If a child has swallowed any such thing, see a doctor at once.

Do not touch the power cord with wet hands when pulling it from a power outlet.
If the power plug or outlet is smeared with extraneous matter, wipe it with a dry cloth.
Noncompliance may cause electric shock or fire.

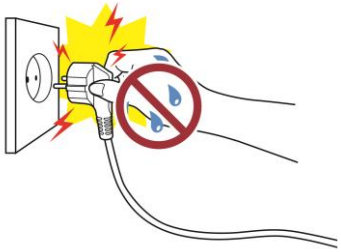

Do not allow the product to be damaged by heavy objects.
Noncompliance may cause electric shock or fire.

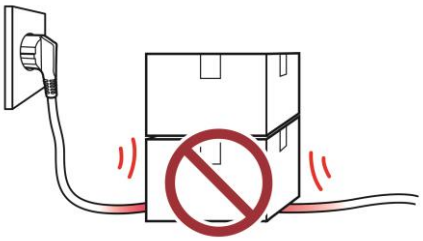

If the product emits a strange sound, burning smell, or smoke, turn off the power immediately and unplug the power cord. If the product is dropped or its exterior is damaged, turn off the power immediately and unplug the power cord. Do not subject the product to shock. **It may start a fire. It may damage the product.**

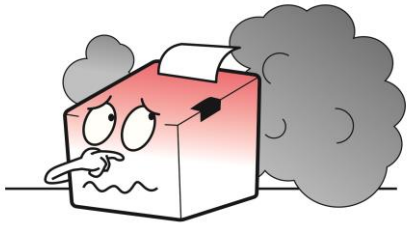

Install the product in a well-ventilated place by keeping it a certain distance from the wall. The product installed in certain places such as where a lot of fine dust is generated, where the temperature is too high or too low, where there is a lot of moisture or water, and at airports or stations that are used continuously for a long time may suffer serious quality problems due to the influence of the surrounding environment. **An increase in internal temperature may start a fire. Be sure to contact the place of purchase before installing the product.**

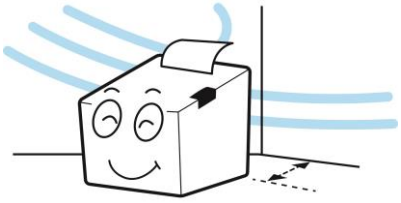

Install the product in a fixed place preventing it from tipping over. When moving the product, turn off the power and disconnect all cables connected to the product, including the power cord. **It may damage the product.**

Never disassemble, repair, or modify the product at your own discretion. **When repair is necessary, contact the place of purchase.**

Do not let any foreign substances enter the product. Do not place heavy objects, liquids, or metals on the product. **It may start a fire.**
It may damage the product.

If there is a problem with the product, please contact the place of purchase. In addition, Bixolon website (http://www.bixolon.com) provides product repair.

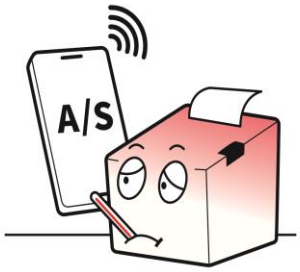

Manual Introduction

This manual provides basic information on printers and provides ways to install, use, and check them. In order to protect the safety of users and prevent property damage, be fully familiar with this manual before using the product. Please use it.

1. Windows Driver Manual
   This manual provides information on the installation instructions and main functions of the windows driver.

2. Unified Label Utility-II Manual
   This manual provides information on the usage of software for function selection of this product, operating condition modification, etc.

3. Programming(SLCS) Manual
   This manual provides information on label printer commands.

4. True Font Downloader Manual
   This manual provides information on the usage of the font downloader that can download true type fonts and facilitate their usage as device fonts.

5. Network Connection Manual
   This manual provides information on the configuration and usage of network interface.

6. Bluetooth Connection Manual
   This manual provides information on connection instructions the Bluetooth interface.

7. Label Design Program Manual
   This manual provides information on the usage of the Windows PC program that can make labels by adding text, graphics, or barcodes at desired positions.

Manual Symbol Introduction

⚠	Precaution & Warning	It describes death, physical injuries, serious financial losses, and damage to data etc. that can be caused to the user.
!	Note	It provides additional information on the function and performance of the product.

Printer Introduction

XD7-20d series printers have been designed to be connected to various types of electronic devices such as computer peripheral devices.

The main features of the printer are as follows

1. XD7-20d : Maximum 203mm/s(Max 8ips) printing speed
   XD7-23d : Maximum 152mm/s(Max 6ips) printing speed
2. 2inch THERMAL LABEL PRINTER
3. Dimension(W x D x H)
   - Standard model : 111 x 219 x 150mm
   - LCD model : 111 x 219 x 160mm
4. Support for multiple interfaces
   - Standard(Wire): USB & USB HOST
   - Option(Wire or Wireless): Serial, Ethernet, Bluetooth, WLAN, Combo(Bluetooth & WLAN)
5. Easy media loading
6. Can print a range of barcodes
7. Option : Peeler, Auto Cutter
8. Option : 4.3” Touch LCD

Product Symbol Introduction

	DC (Direct current)
	USB
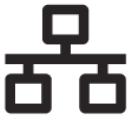	Ethernet

1. Content Confirmation

The following items should all be contained in the printer package.
Contact the dealer from which the purchase was made if any item is damaged or missing.

Product

XD7-20d/23d

XD7-20d/23d LCD Model(Option)

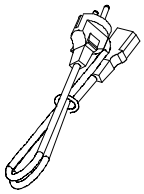

Power Cord

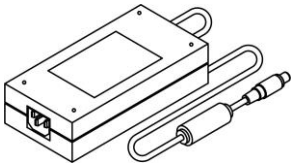

AC/DC Adapter

Quick Manual

USB Cable

Optional

Serial(RS-232C) Cable

2. Product Part Names

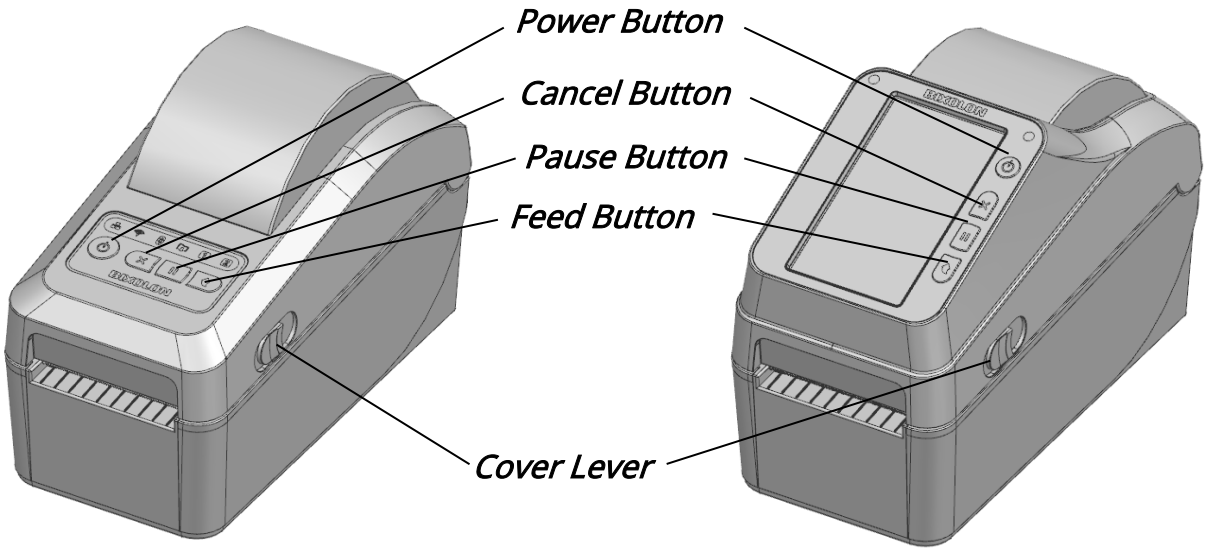

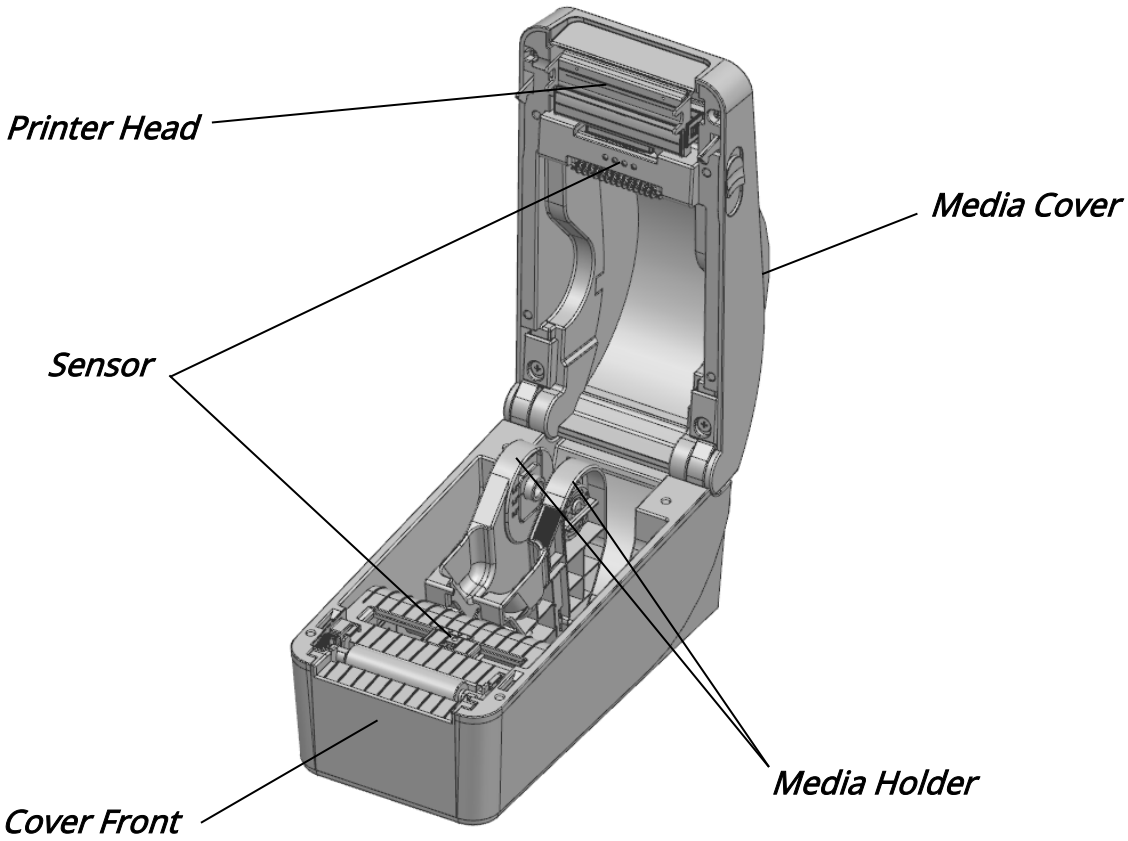

3. Installation & Usage

3-1 Printer Installation Placings

• Install the printer in a location that meets the following conditions.

- Allow sufficient space around the printer for proper ventilation.

- Install the printer on a flat and level surface.

- Avoid humid environment.

3-2 Power Connection

• Connect power to the printer as shown below.

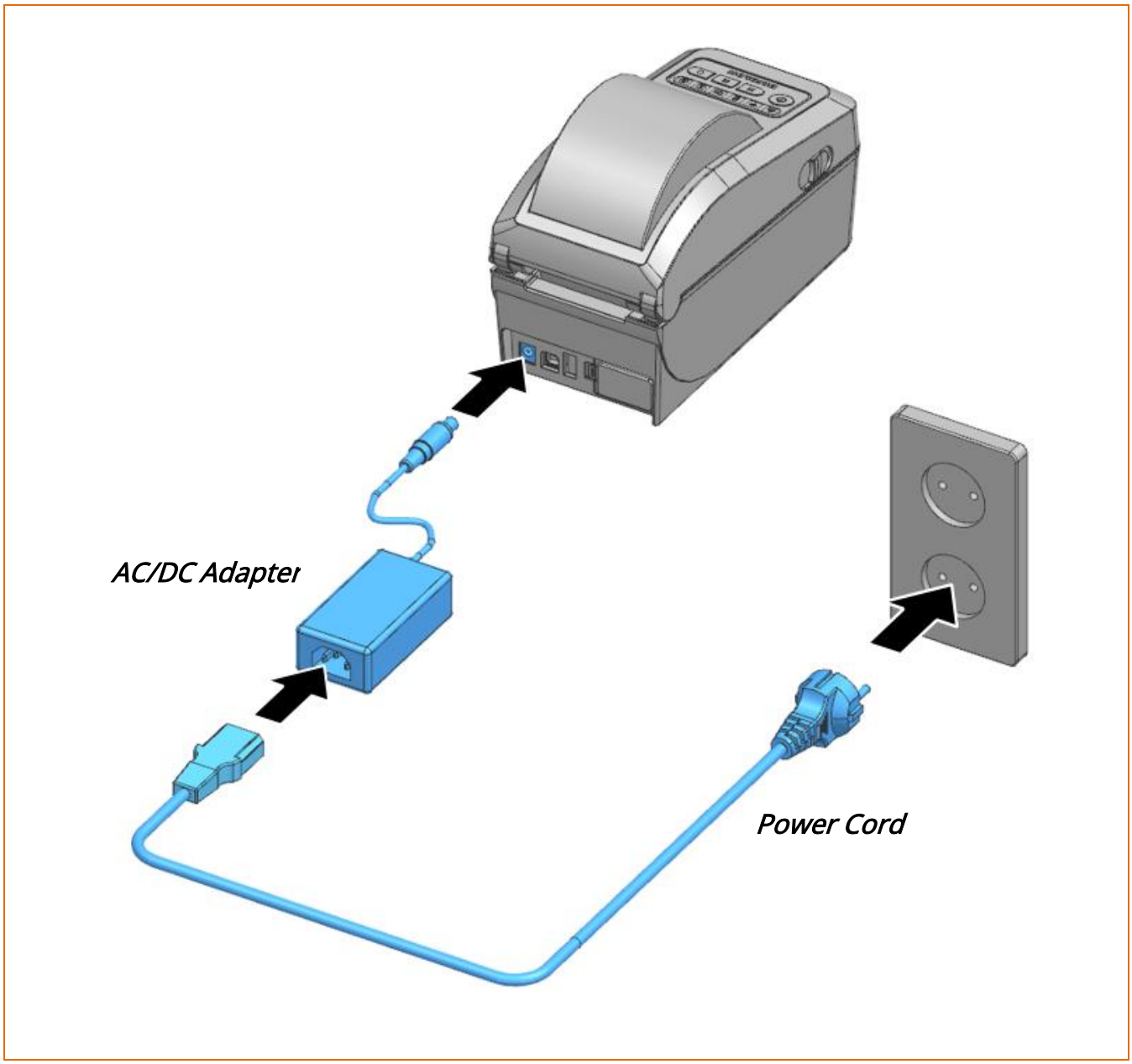

1) Check to see that the AC/DC adapter voltage matches that of the power source.

2) Connect the AC/DC adapter jack to the printer power port.

3) Connect the power cord to the AC/DC adapter.

4) Connect the power cord to a power source/outlet.

- Only use a power supply provided by BIXOLON. BIXOLON shall bear no responsibility for damage caused by using a third-party power supply.
- Check the power supply's label to check its electronic specs.
- For the safety of people and equipment, please use the appropriate power cord for your country or region.
- When removing the power supply, make sure you have a firm grasp of power connector and the printer, then pull horizontally.
- Do not operate the printer and power supply in a humid environment. This can cause serious electrical damage and bodily injury.
- Do not connect an input voltage beyond the specifications of the power supply. This may result in product damage and fire.

3-3 Interface

3-3-1 Standard Interface (USB & USB HOST)

Connect the interface cable as shown below.
This printer supports the following communications interface standards.

- USB Type-B Cable
- USB Type-A Storage (*USB type dongle not supported)

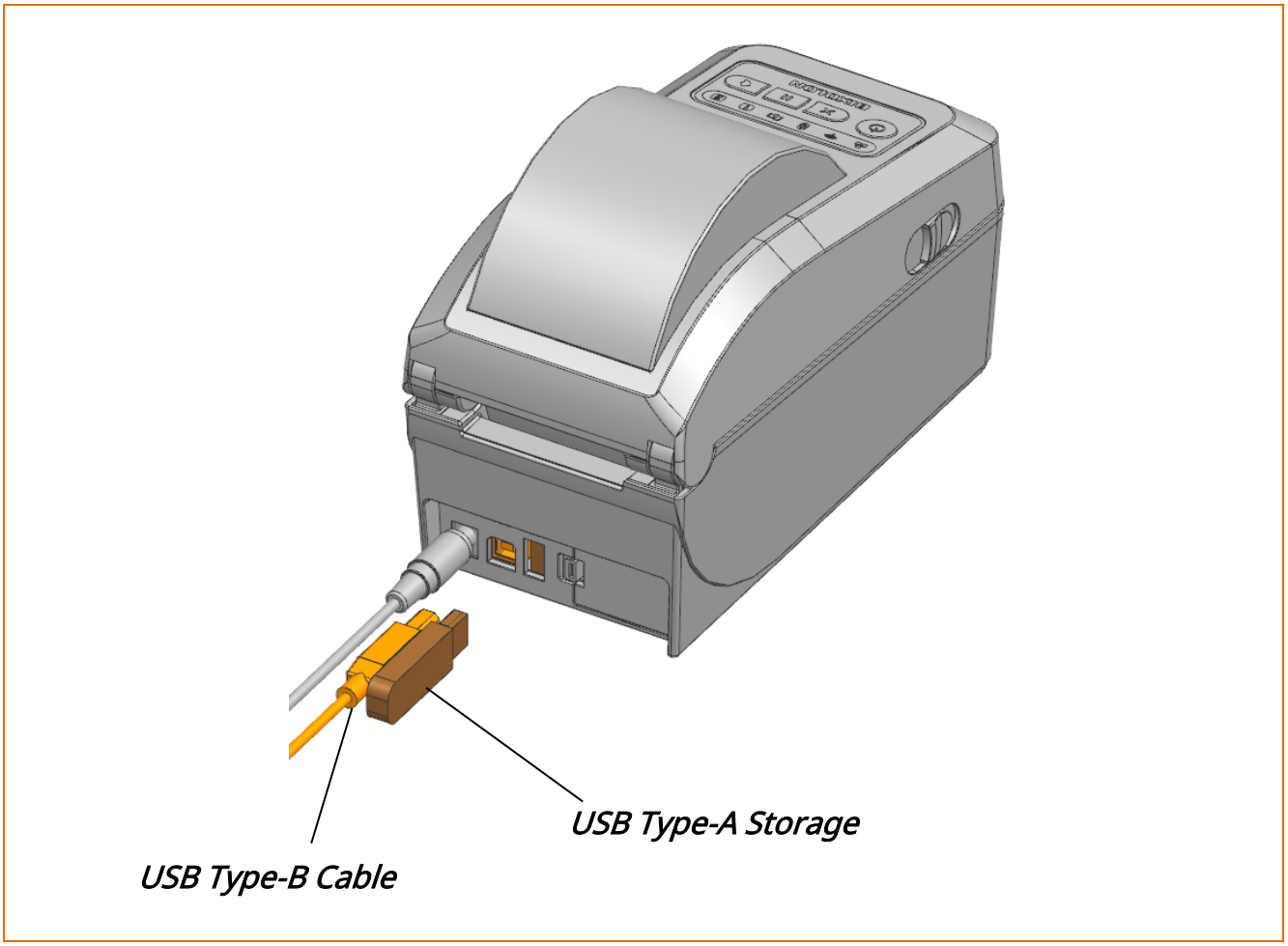

1) Turn off the power switch.

2) Connect the communication cable to the printer communication port to be used.
- Connect USB Type-B cable to the USB port.
- Connect USB Type-A storage to the USB port.

Be aware that the product's electronic components may be damaged due to discharging of electrostatic energy that accumulates on the surface of the body or other objects.

3-3-2 Optional Interface (Serial)

Connect the interface cable as shown below.
This printer supports the following communications interface standards.

- Serial(RS-232C) Cable
- USB Type-B Cable
- USB Type-A Storage (*USB type dongle not supported)

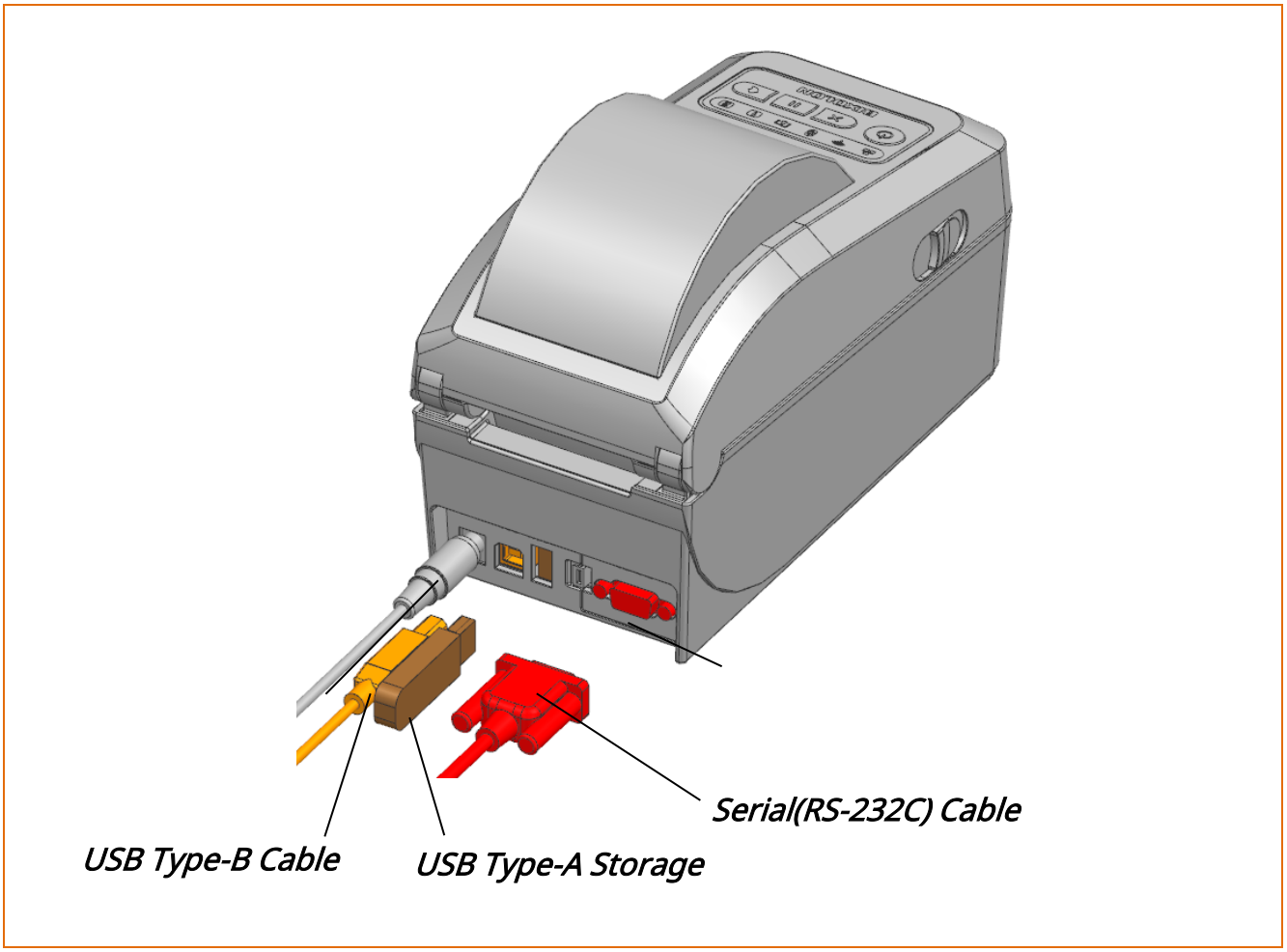

1) Turn off the power.

2) Connect the communication cable to the printer communication port to be used.
- Connect the serial(RS-232C) cable to the serial port and tighten the screw on both sides.
- Connect USB Type-B cable to the USB port.
- Connect USB Type-A storage to the USB port.

Be aware that the product's electronic components may be damaged due to discharging of electrostatic energy that accumulates on the surface of the body or other objects.

3-3-3 Optional Interface (Ethernet)

Connect the interface cable as shown below.
This printer supports the following communications interface standards.

- LAN(Ethernet) Cable
- USB Type-B Cable
- USB Type-A Storage (*USB type dongle not supported)

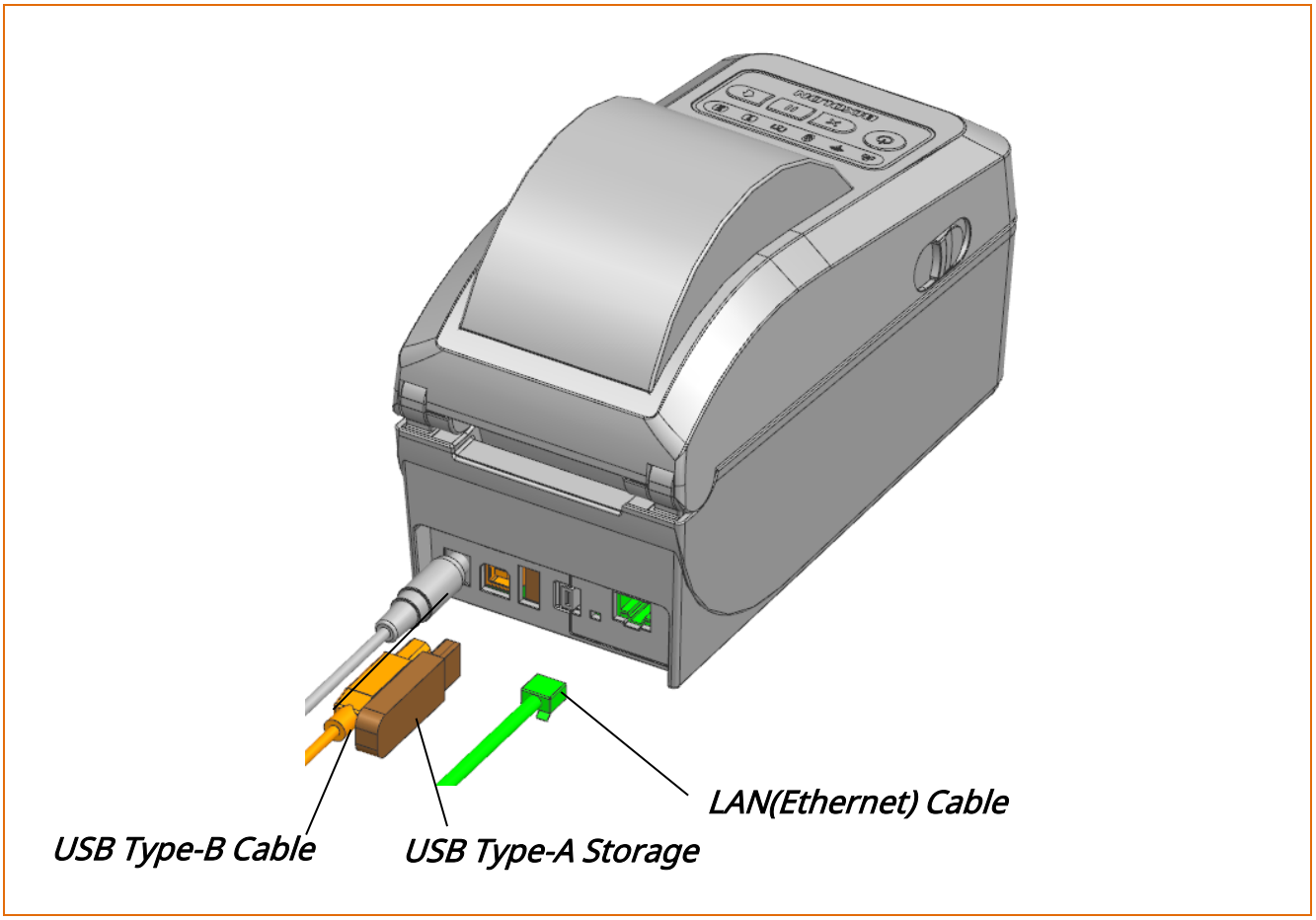

1) Turn off the power.

2) Connect the communication cable to the printer communication port to be used.
- Connect the LAN(Ethernet) cable to the Ethernet port.
- Connect USB Type-B cable to the USB port.
- Connect USB Type-A storage to the USB port.

Be aware that the product's electronic components may be damaged due to discharging of electrostatic energy that accumulates on the surface of the body or other objects.

3-3-4 Optional Wireless Interface (WLAN, Bluetooth, Combo(Bluetooth & WLAN))

This printer supports the following wireless interface(optional)

- WLAN
- Bluetooth
- Combo(Bluetooth & WLAN)

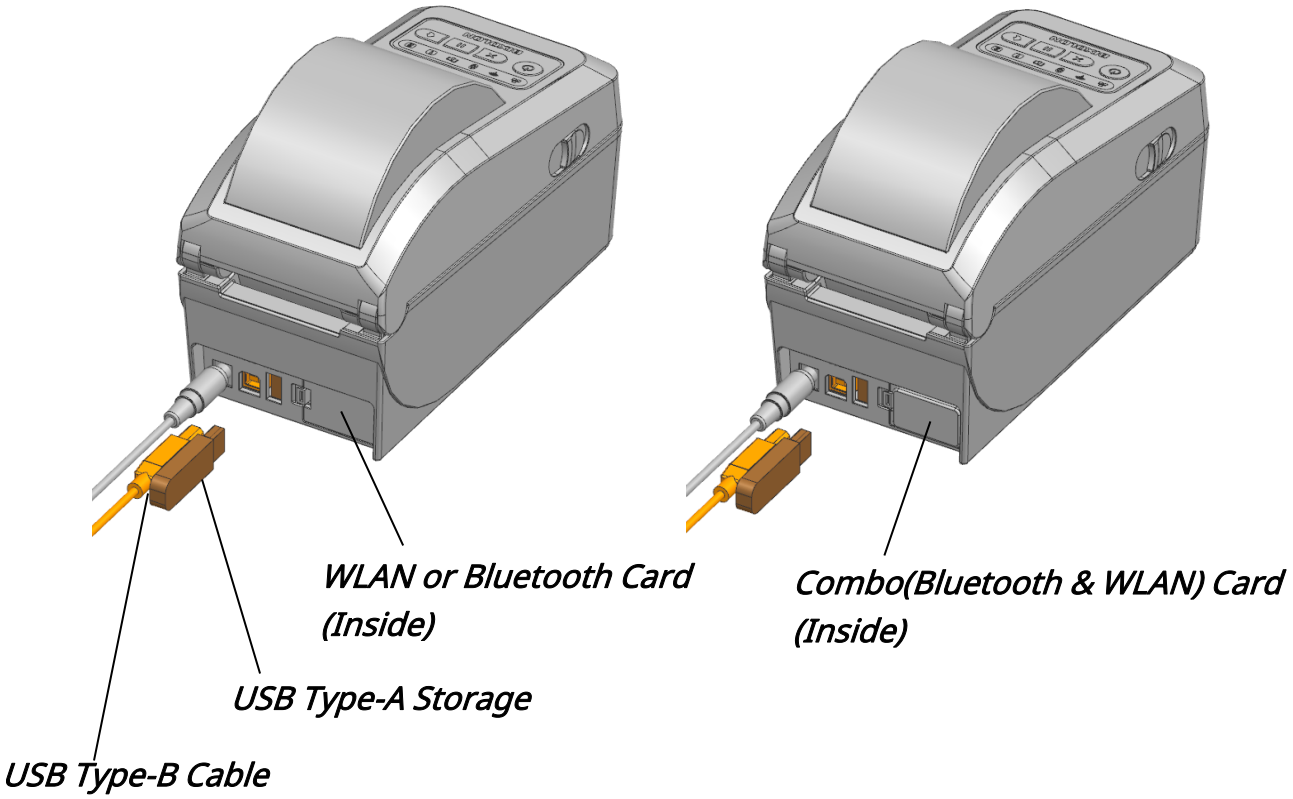

1) Turn off the power switch.

2) Connect the communication cable to the printer communication port to be used.
   - Connect USB Type-B cable to the USB port.
   - Connect USB Type-A storage to the USB port.

Be aware that the product's electronic components may be damaged due to discharging of electrostatic energy that accumulates on the surface of the body or other objects.

3-3-5 Replacing Optional Interface

• Be sure to turn the printer off.

1) Open the interface cover.

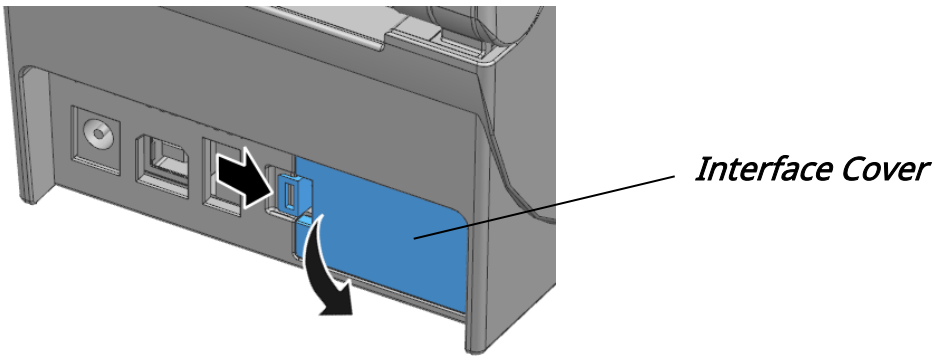

2) Using a tool such as a flat-blade screwdriver via the groove on the bottom of the printer, push the interface card and remove it.

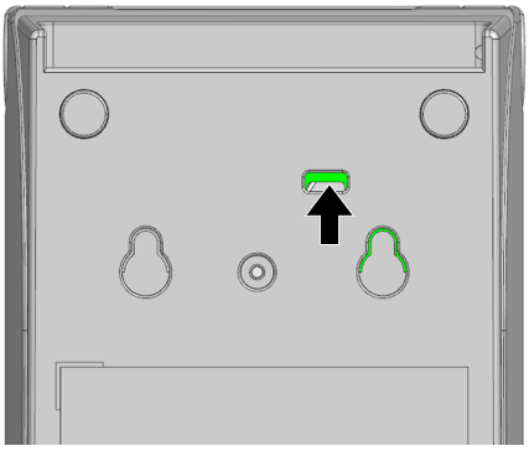

3) Insert the new interface card and close the interface cover.

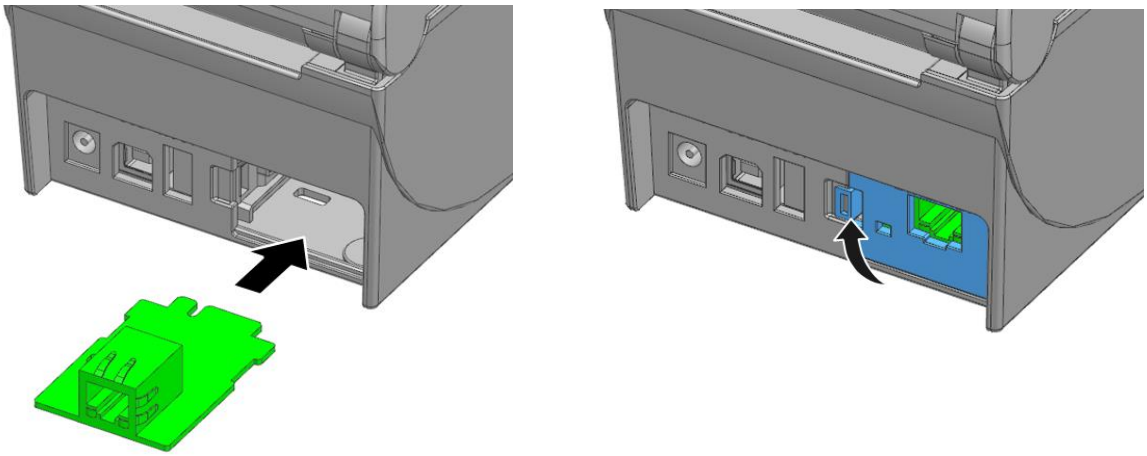

Make sure to turn the printer power off prior to replacing the interface card.

Shielded cables must be used to prevent radiation and reception of electrical noise. Use the shortest possible communication cable to minimize the detection of electrical noise in the cable.

- Serial(RS-232C) Cable (1.8m or less recommended)
- USB Type-B Cable (1.8m or less recommended)
- LAN(Ethernet) Cable (3m or less, CAT-5 or higher UTP Cable)

- **Connecting unshielded communication cables is in violation of EMC standards. Use the cable approved by us.**
- **Do not bundle the communication cable with objects that may cause electrical noise and interference. The printer may be damaged.**
- **After turning off the power switch of printer, connect and disconnect the communication cable.**
  This can cause serious electrical damage and bodily injury.

3-4 Media Installation

1) Pull the cover levers on both sides of the media cover and open the media cover.

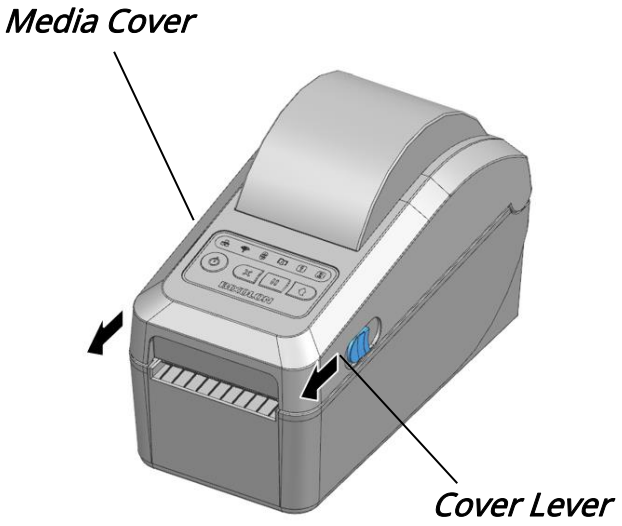

2) Spread the media holder and insert media as shown.

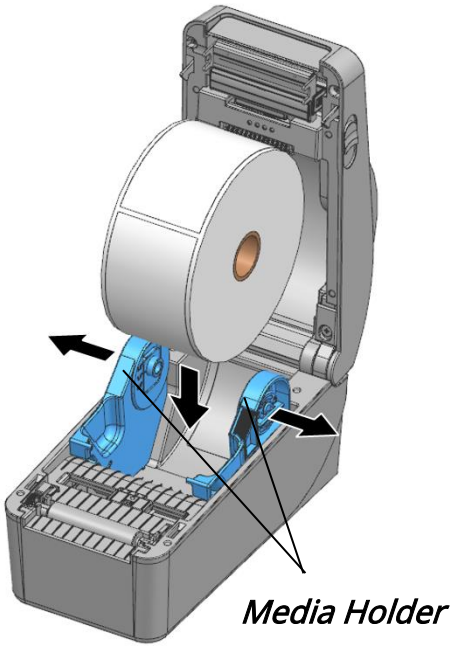

* When using 0.5 inch or 1.5 inch inner diameter paper core, adjust the height of the paper core holder.

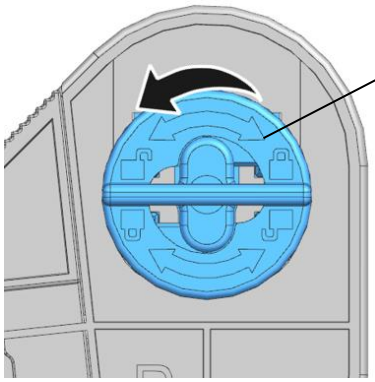

Rotate the fixing part and separate paper core holder.

Adjust the paper core holder position and reassemble the media holder fixing part.

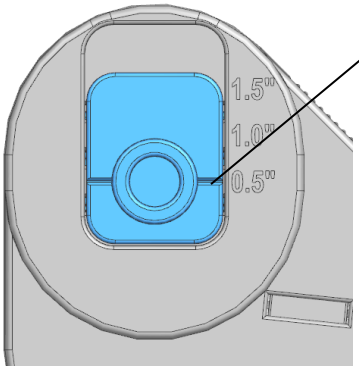

< 0.5 inch >

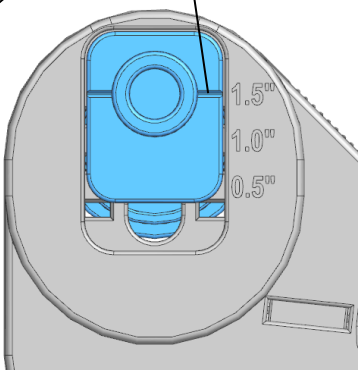

< 1.5 inch >

3) Pull the media out to the front of printer.
Insert the media under both sides of Media Holder Guide.
Adjust the media guides to the width of the media.
* Whether the media is rolled outside or inside, the printing side must face up.

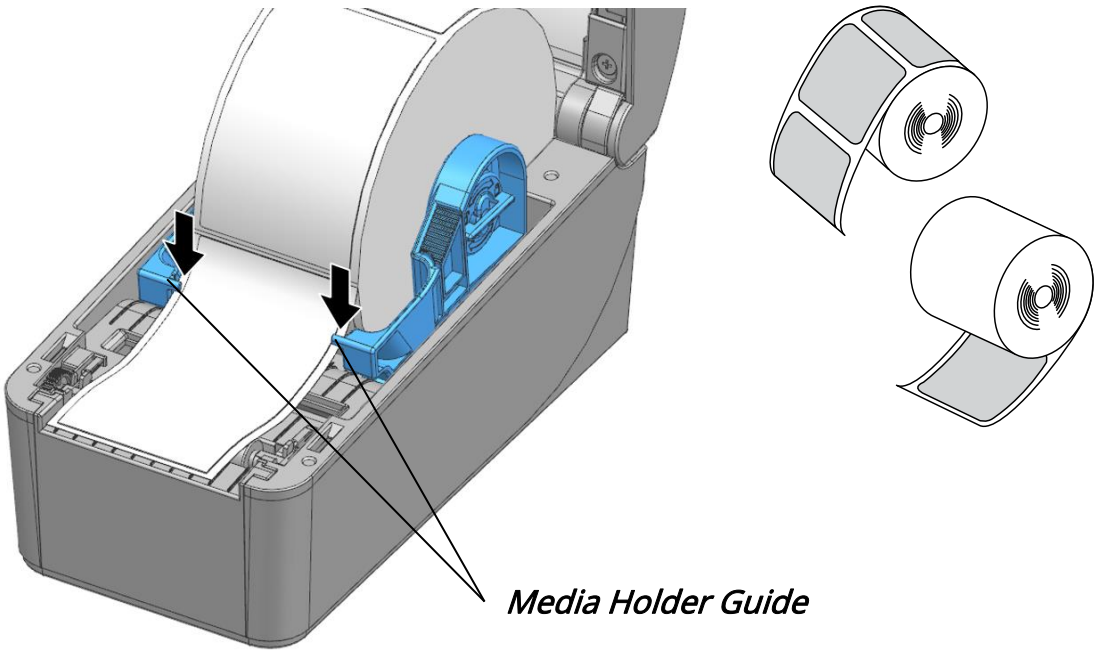

4) When using gap media, make sure the sensor position matches the marked position .

5) After Installation the media, lift the media and manually set the sensor(Black-Mark & Notch Sensor) to the correct position.

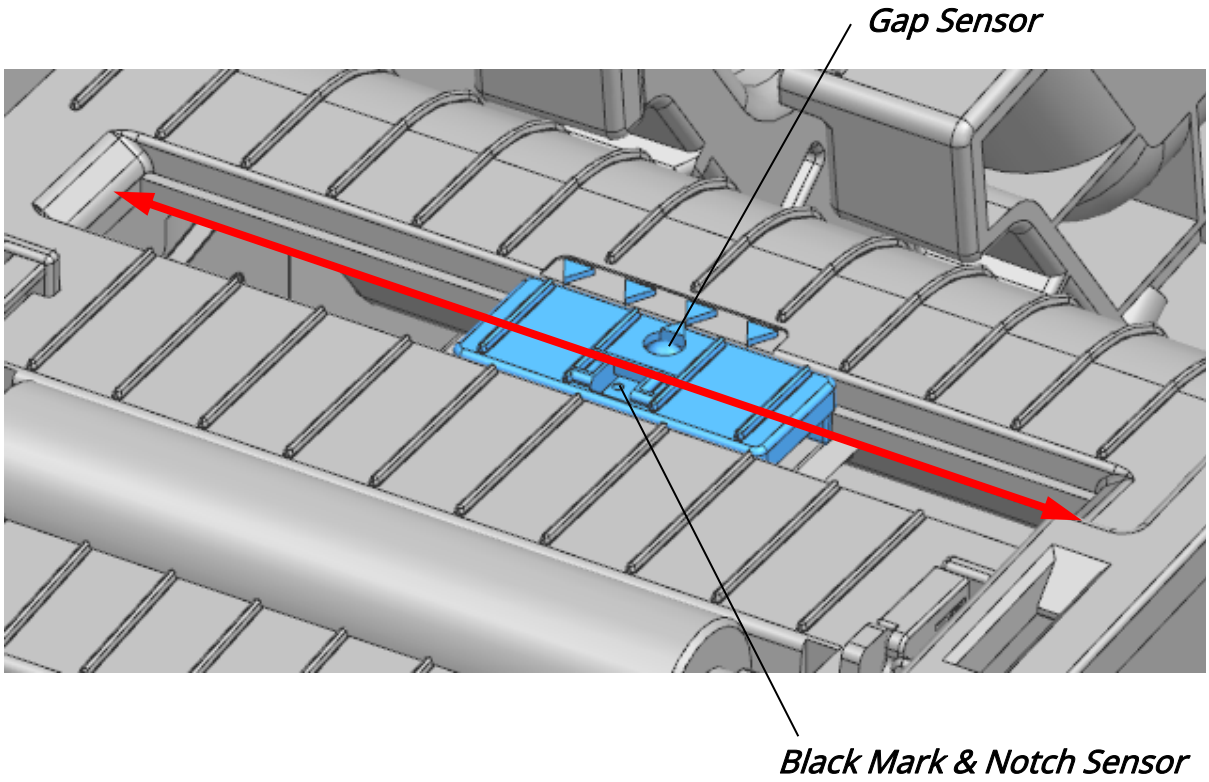

- When opening or closing the cover, be careful not to pinch your fingers.
- Do not open the print head levers while the printer is printing. The printer may be damaged.
- Change the media when the printer is not receiving data, or data may be lost.
- The print head gets extremly hot while printing or after the printing, this can cause serious burns. Do not touch the print head.

3-5 Control Panel Operating Instructions (Standard Model)

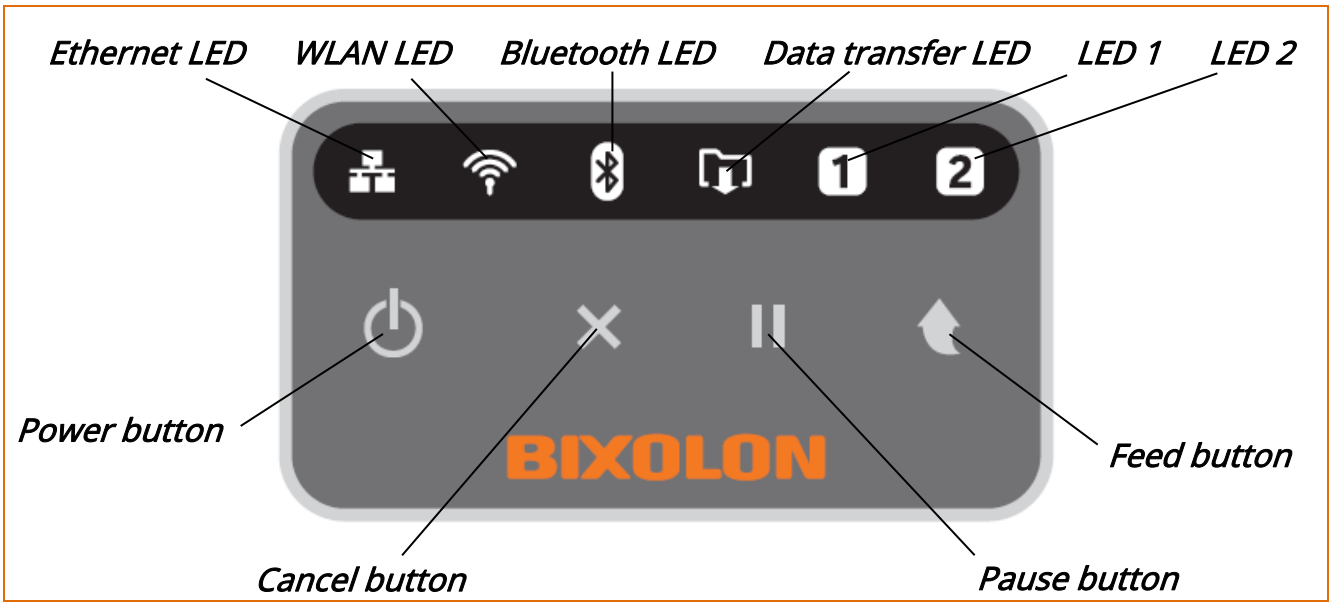

3-5-1 Button Operations

Printer state before operation	Button			Operation procedure	Printer operation mode
	Cancel	Pause	Feed		
Power OFF	-	-	Press	Apply power while pressing the button (Hold the button until the printer starts self-test printing)	Self-test Printing
Print Ready	-	-	Press	Press the button	Feed
Print Ready	-	-	Press	Press the button for three seconds	Execute SWC (Refer 5-9)
Print Ready	-	Press	-	Press the button for two seconds	Stand-alone Configuration Mode (Refer 5-1)
During Printing	-	Press	-	Press the button for two Seconds	Pause mode
During Printing	Press	-	-	Press the button for two Seconds	Cancel mode
Pause mode	-	Press	-	Press the button	Print Resume
Pause mode	Press	-	-	Press the button	Print Cancel
Cancel mode	Press	-	-	Press the button	Print Cancel

3-5-2 LED Indicator For Interface Statuses

List	Status	Explanation
		Ethernet cable is not connected
		Ethernet cable is connected
		WLAN module is not installed
		Connected to AP
		Not connected to AP
		Attempting to connect to AP
		Bluetooth module is not attached
		Bluetooth is connected to the host
		Bluetooth is not connected to the host
		Bluetooth module is booting
		No data received
		Receiving data
		Data reception error

3-5-3 LED Indicator For Various Printer Statuses

LED 1	LED 2	Printer Operation Status	
1	2	Print Ready Mode	Ready Mode
1	2	Print Cancel Mode	Wait For Button Input
1	2	Print Is Paused Temporarily	Wait For Button Input
1	2	Print Standby Mode	Wait For Button Input
1	2	Error Mode	Media Jam (gap/black mark is not recognized)
1	2	Error Mode	Printer Head Overheating
1	2	Error Mode	No Media
1	2	Error Mode	Media Cover Open
1	2	Error Mode	Media Calibration Failure
1	2	Error Mode	Auto-Cutter Error

3-6 Control Panel Operating Instructions (LCD Model)

3-6-1 Control Panel

No	Description
1	Interface status icon
2	Time
3	Model name
4	Firmware version
5	Printer status
6	Main icon
7	Ethernet IP, WLAN IP
8	Date
9	Printer operation button

3-6-2 Detailed Descriptions

3-6-2-1 Interface Status Icon

List	Status	Explanation
	ON	Ethernet is connected
	OFF	Ethernet is not connected
	ON	Not connected to AP
	OFF	WLAN communication is not supported
	ON	Connected to AP, Strength: 4
	ON	Connected to AP, Strength: 3
	ON	Connected to AP, Strength: 2
	ON	Connected to AP, Strength: 1
	ON	Bluetooth is not connected to the host
	OFF	Bluetooth communication is not supported
	ON	Bluetooth is connected to the host
	ON	USB device is connected
	OFF	USB device is not connected
	ON	Password feature is enabled
	OFF	Password feature is disabled
	ON	Receiving data
	OFF	No data received
	Blink	Data reception error

3-6-2-2 Date, Time (RTC clock)

List	Explanation
YYYY-MM-DD	Date
12:00 AM/PM	Time

3-6-2-3 Model Name

List	Explanation
XD7-20d	Model name

3-6-2-4 Firmware Version

List	Explanation
V01.00	Firmware version

3-6-2-5 Printer Status

List	Explanation
READY	Ready for print
STANDBY	Standing by for user input - button: Switch to Print Standby Mode without feeding any media - button: Feed one sheet of media to align the media position and switch to the Print Standby Mode
PRINTING	In printing
PAUSE	Printing pause
CANCEL	Canceled printing
F/W Downloading	Downloading firmware
PRINT HEAD OPEN	Print head is open
PRINT HEAD OVER TEMP	Print head has reached the maximum temperature
PRINT HEAD COLD TEMP	Print head has reached the minimum temperature
AUTO CUTTER JAM	Media is stuck in the auto cutter blade
MEADIA OUT	Media is not installed correctly
MEADIA JAM	Media is jammed and not printing normally
SENSING FAIL	Media is not recognized normally

3-6-2-6 Main Icons

List	Explanation
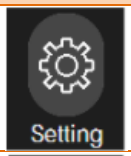	Printer settings
	Interface settings
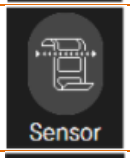	Sensor settings
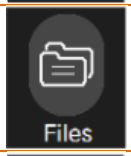	File settings
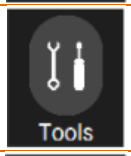	Additional, other functions settings and printer information
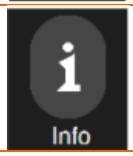	Providing printer information

3-6-2-7 Ethernet IP, WLAN IP

List	Explanation
LAN: 192.168.100.123	Ethernet IP
WLAN: 192.168.100.123	WLAN IP (displayed only when WLAN is supported)

3-6-2-8 Function Button

List	Explanation
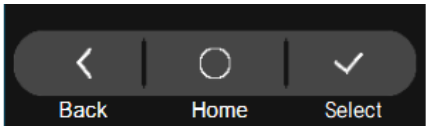	Select, Cancel, Save, Delete, Move to main menu

3-6-2-9 Printer Operation Button

List	Explanation
	Press the button for 2 seconds during printing to power on or off
	Press the button to feed one label
	Press the button for 2 seconds during printing to pause printing
	Press the button for 2 seconds during printing to cancel printing

3-6-3 Menu Composition

	Explanation
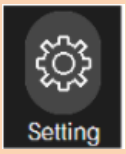	Print Width
	Print Length
	Print Direction
	Print Speed
	Print Density
	Print Method
	Media Type
	Tear Off
	Print Offset
	Left Position
	Print Mode
	Power Up Action
	Print Head Close

	Explanation			
	Serial	Baud Rate		
		Data Bits		
		Parity		
		Stop Bit		
		Host Handshake		
	Ethernet	IP Protocol		
		IP Address		
		Subnet Mask		
		Gateway		
		MAC Address		
	WLAN	Channel		
		Network		
		ESSID (APID)		
		Auth (Authentication)		
		Encrypt (Encryption)		
		WEP Password		
		PSK Password		
		IP Protocol		
		IP Address		
		Subnet Mask		
		Gateway		
		Frequency		
		SWC(Smart Connection active)		
		WLAN Factory Reset		
	Bluetooth	Device Name		
		Pairing	PIN Code	
			SSP(Secure Simple Pairing)	
		MAC Address		
		Mode	Bluetooth Low Energy	
			Standard Mode	Connect Mode
				Auth&Enc (Authentication & Encryption)
		BT Factory Reset		
	Interface Info			

	Explanation
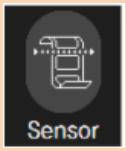	Gap Calibration
	Black Mark Calibration
	Max Calibration Length

	Explanation	
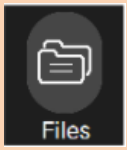	Saved File	Template
		Image
		Download Font
		E Drive (Flash Memory)
		A Drive (USB Memory)
	Twin Function	Printer Setting
		Template
		Image
		Download Font
	Firmware Update	

	Explanation	
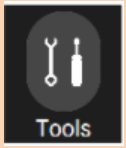	Self Test	
	Factory Reset	
	Dump Mode	
	Print Head Check	
	LCD	Dead Pixel Test
		Touch Position Test
		Backlight Brightness
	Real Time Clock	Date Setting
		Time Setting
		Date Format
		Time Format
	Language Setting	
	Emulation	
	USB Serial Number	
	Security	Password Enable
		Password Setting
	Demo Print	
	Reprint Mode	

	Explanation	
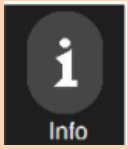	Printer Info	
	Installation & Usage	Media Installation
		Media Installation (Peel Off)
		Peel off Installation
		Auto Cutter Installation
		Replace Media
		Replace Print Head
	Troubleshooting	
	Contact US	

3-6-4 Menu Select Method

1) This is print ready status

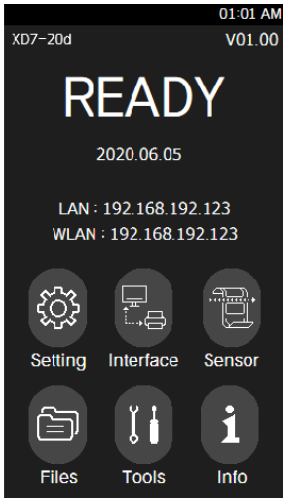

2) Press the setting menu.

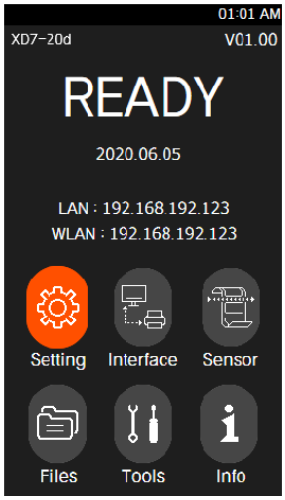

3) Press screen to enter the sub menu.

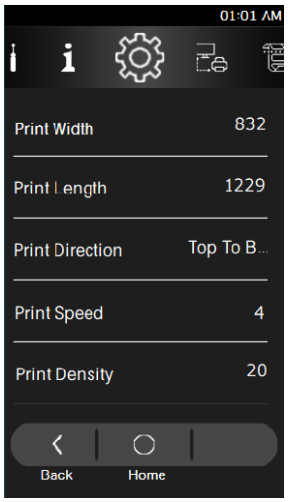

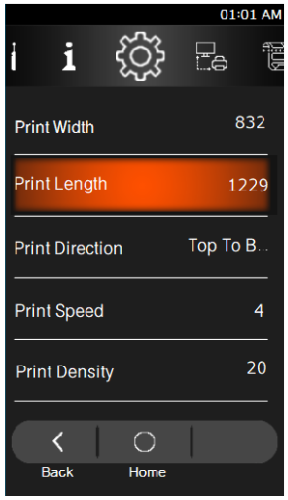

4) If there are no input for 5 seconds, it returns to main screen .

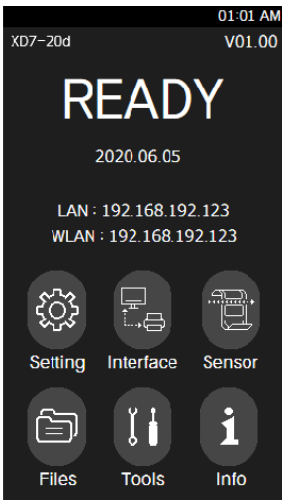

3-6-5 Setting Confirm Method

1) How to use the up and down buttons

(1) Select the desired setting value using ▲ or ▼ button

(2) After selecting the setting value, save it with button

(3) If you want to exit the menu without setting, press button to move to the previous screen

(4) If you want to exit the menu without setting, press button to move to the main screen

2) How to input numbers

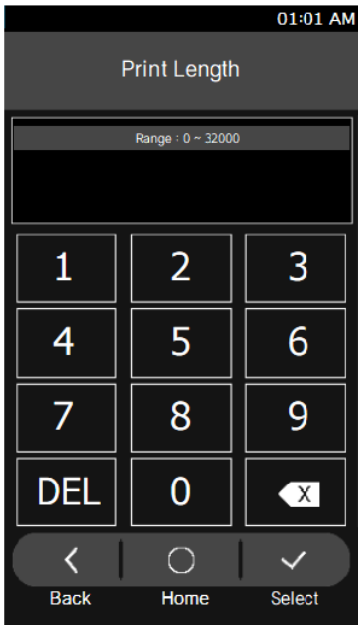

(1) Select the desired setting value using number keypad.

(2) With , you can delete the input value.

(3) With DEL, you can delete the all input value.

(4) After selecting the setting value, save it with button

(5) If you want to exit the menu without setting, press button to move to the previous screen

(6) If you want to exit the menu without setting, press button to move to the main screen

3) How to input characters(English only)

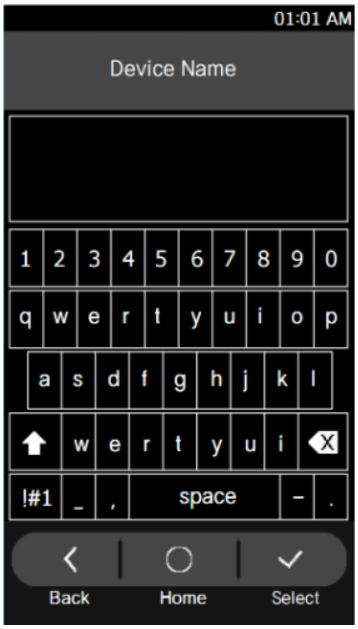

(1) Select the desired setting value using keypad.

(2) With , you can delete the input value.

(3) With , you can input the capital lettere.

(4) After selecting the setting value, save it with button

(5) If you want to exit the menu without setting, press button to move to the previous screen

(6) If you want to exit the menu without setting, press button to move to the main screen

4) How to input IP address

(1) Select the desired IP Address using number keypad.

(2) With , you can delete the input value.

(3) With , you can input the Dot(.)

* from 0 to 99, press Dot(.) to move next

* from 100 to 255, Dot(.) would be automatically generated.

(4) After selecting the setting value, save it with button

(5) If you want to exit the menu without setting, press button to move to the previous screen

(6) If you want to exit the menu without setting, press button to move to the main screen

3-6-6 Setting Menu Explanation

List	Explanation
Print Width	**Explanation** Setting media width[dots] Function to adjust image buffer size according to print width **Default Value** 203dpi: 432 dots(54mm) 300dpi: 672 dots(56.9mm) **Maximum Value** 203dpi: 432 dots (54mm) 300dpi: 672 dots(56.9mm)
Print Length	**Explanation** Setting media length[dots] Function to adjust image buffer size according to print length **Default Value** 203dpi: 608 dots (76mm) 300dpi: 898 dots (150mm) **Maximum Value** 203dpi: 16000 dots (2000mm) 300dpi: 24000 dots (2000mm)

Print Direction	**Explanation** Setting printing direction Top to bottom: Printing from top to bottom Bottom to Top: Printing from bottom to top **Default Value** Bottom to Top **Variable Value** Bottom to Top, Top to Bottom Printing Direction 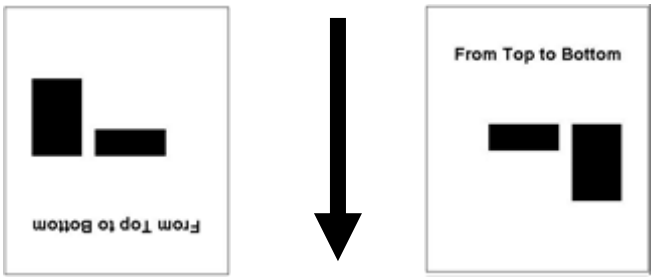 Top to bottom Bottom to top
Print Speed	**Explanation** Setting print speed[ips] **Default Value** 203dpi: 7ips 300dpi: 5ips **Variable Value** 203dpi: 3 ~ 8ips 300dpi: 2 ~ 6ips
Print Density	**Explanation** Setting print density **Default Value** 203dpi: 20 300dpi: 20 **Variable Value** 0 ~ 30

Print Method	**Explanation** Setting print method **Default Value** Direct
Media Type	**Explanation** Setting media type **Default Value** Gap **Variable Value** Gap, Black Mark, Continuous
Tear Off	**Explanation** Setting media position[dots] for tear off after printing or feed **Default Value** 0 **Variable Value** -100 ~ 100
Print Offset	**Explanation** Setting top print position[dots] **Default Value** 0 **Variable Value** -100 ~ 100
Left Position	**Explanation** Setting left print position[2dots] **Default Value** 0 **Variable Value** -300 ~ 300

Print Mode	**Explanation** Setting print mode suitable to the printer option **Default Value** Tear Off **Variable Value** Tear Off, Auto Cutter
Power Up Action	**Explanation** Setting the action for the printer after the power-up sequence. **Default Value** No Feed **Variable Value** No Feed, Set Label Length, Media Calibration, Feed
Print Head Close	**Explanation** Setting the action for the printer when you close the print head **Default Value** Standby Mode **Variable Value** Feed, Standby Mode, No Feed, Set Label Length, Media Calibration

3-6-7 Interface Menu Explanation

3-6-7-1 Serial

List	Explanation
Baud Rate	**Explanation** Setting the baud rate **Default Value** 115200 **Variable Value** 9600, 19200, 38400, 57600, 115200
Data Bits	**Explanation** Setting the data bit **Default Value** 8 **Variable Value** 7, 8
Parity	**Explanation** Setting the parity **Default Value** None **Variable Value** None, Odd, Even
Stop Bit	**Explanation** Setting the stop bit **Default Value** 1 **Variable Value** 1, 2
Host Handshake	**Explanation** Setting the handshake **Default Value** RTS_CTS **Variable Value** RTS_CTS, DTR_DSR, XON_XOFF

3-6-7-2 Ethernet

List	Explanation
IP Protocol	**Explanation** Setting IP assignment method **Default Value** DHCP **Variable Value** DHCP, Static IP
IP Address	**Explanation** Setting IP Address method **Default Value** Static IP: 192.168.192.123 DHCP: 0.0.0.0 **Variable Value** 0 ~ 255
Subnet Mask	**Explanation** Setting subnet mask **Default Value** Static IP: 255.255.255.0 DHCP: 0.0.0.0 **Variable Value** 0 ~ 255
Gateway	**Explanation** Setting gateway **Default Value** Static IP: 192.168.192.254 DHCP: 0.0.0.0 **Variable Value** 0 ~ 255
MAC Address	**Explanation** Indicating MAC address

3-6-7-3 WLAN

List	Explanation
Network	**Explanation** Setting WLAN operation mode **Default Value** Soft AP **Variable Value** Soft AP, Infrastructure, P2P *P2P is not supported by the Combo module.
ESSID	**Explanation** Setting the ID of AP to be accessed **Default Value** PRINTER_xxxxxx(product specific value)
Auth	**Explanation** Setting WLAN authentication method **Default Value** Open System **Variable Value** Open System, Shared Key, WPA1PSK, WPA2PSK, WPA1EAP, WPA2EAP
Encrypt	**Explanation** Setting WLAN encryption method **Default Value** None **Variable Value** None, WEP64/128, TKIP, AES, AES+TKIP
WEP Password	**Explanation** Setting WEP password
PSK Password	**Explanation** Setting PSK password

IP Protocol	**Explanation** Setting IP assignment method **Default Value** DHCP **Variable Value** Static IP, DHCP
IP Address	**Explanation** Setting IP address **Default Value** Static IP: 192.168.1.1 DHCP: 0.0.0.0 **Variable Value** 0 ~ 255
Subnet Mask	**Explanation** Setting subnet mask **Default Value** Static IP: 255.255.255.0 DHCP: 0.0.0.0 **Variable Value** 0 ~ 255
Gateway	**Explanation** Setting gateway **Default Value** Static IP: 192.168.1.254 DHCP: 0.0.0.0 **Variable Value** 0 ~ 255

Frequency	**Explanation** Setting Frequency **Default Value** 2.4/5GHz(Priority:2.4GHz) **Variable Value** 2.4GHz, 5GHz, 2.4/5GHz(Priority:2.4GHz), 2.4/5GHz(Priority:5GHz)
Smart Connection active	**Explanation** After searching a Smart Connection Act Enabled printer with the smart phone app, enable or disable the function synchronizing Wi-Fi login information connected to the smart phone. **Default Value** Disable **Variable Value** Disable, Enable
WLAN Factory Reset	**Explanation** Initializes the WLAN settings to factory default

3-6-7-4 Bluetooth

List			Explanation
Device Name			**Explanation** Name of Device
Pairing	PIN Code		**Explanation** Changes required PIN code to connect
Pairing	SSP		**Explanation** Secures simple pairing **Default Value** Disable **Variable Value** Disable, Just Works, Numeric Comparison, Passkey Entry
MAC Address			**Explanation** Bluetooth device MAC address
Mode	Bluetooth Low Energy		**Explanation** Bluetooth Low Energy **Default Value** Disable **Variable Value** Disable, Enable
Mode	Standard Mode	Connect Mode	**Explanation** Setting Bluetooth connection mode **Default Value** Mode 2 **Variable Value** Mode 1, Mode 2, Mode 3
Mode	Standard Mode	Auth&Enc	**Explanation** Setting Bluetooth authentication and encryption function **Default Value** Enable **Variable Value** Enable, Disable
BT Factory Reset			**Explanation** Initializes the BT settings to factory default

3-6-8 Sensor Menu Explanation

List	Explanation
Gap Calibration	**Explanation** Detect media gap and calibrate automatically
Black Mark Calibration	**Explanation** Detect media black mark and calibrate automatically
Max Calibration Length	**Explanation** Adjustment of maximum calibration length **Default Value** 600 (mm) **Variable Value** 150 ~ 2000 (mm)

Depending on the characteristics of the media, the amount of media output may be different during gap / black mark calibration.

3-6-9 Files Menu Explanation

List	Explanation		
Files	Saved File	Template	Refer 3-6-9-1 Saved File
		Image	
		Download Fonts	
		E Drive (Flash Memory)	
		A Drive (USB Memory)	
	Twin Function	PRT Set (Printer Setting)	Refer 3-6-9-2 Twin Function
		Template	
		Image	
		Download Fonts	
	F/W Update		Refer 3-6-9-3 F/W Update

3-6-9-1 Saved File

Displays the list of object files stored in the printer on the LCD screen.

List	Explanation
Template	Template list stored in the printer
Image	Image list stored in the printer (*.pcx)
Download Font	Download font list stored in the printer
E Drive (Flash Memory)	Saved object files in E drive
A Drive (USB Memory)	Saved object files in A drive

3-6-9-2 Twin Function

Saves the current printer settings, save files (templates, images, download fonts) to another printer using USB, or loads the settings of another printer and saves files to the current printer.

List	Explanation
Printer Setting	**Explanation** Saves printer settings to a USB storage device, or loads the print settings from USB storage. **File path** F:\configuration
Template	**Explanation** Saves template file to a USB storage device, or load the template from USB storage. **File path** F:\ USER_AREA_TEMPLATES
Image	**Explanation** Saves image file to a USB storage device, or load the image from USB storage (*.pcx) **File path** F:\ USER_AREA_Images
Download Font	**Explanation** Saves download font file to a USB storage device, or load the download font from USB storage. **File path** F:\ USER_AREA_FONTS

List	Explanation
Printer Setting	**Explanation** Saves printer settings to a USB storage device, or loads the print settings from USB storage. **File path** F:\configuration • **Save Function Explanation** - Connect a USB storage to the printer. - Select Save on the menu using the up and down buttons. - The printer_config file is created in the configuration folder of USB storage device. (The configuration folder is automatically created) • **Load Function Explanation** - Check whether the printer_config file exists in the configuration folder of the USB storage device. (If there is no file, save the printer settings first.) - Connect the USB storage to the printer. - Select Load from the Printer Setup menu using the up and down buttons. - Loading message is displayed while loading, and when loading is completed, USB loading completion message is displayed. - Check the change of the printer's settings.

List	Explanation
Template	**Explanation** Saves template file to a USB storage device, or load the template from USB storage. **File path** F:\ USER_AREA_TEMPLATES • **Save Function Explanation** - Connect a USB storage to the printer. - Select Save on the menu using the up and down buttons. - Template files are stored in the USER_AREA_TEMPLATES folder of USB storage device. (USER_AREA_TEMPLATES folder is automatically created) • **Load Function Explanation** - Check whether a template file exists in the USER_AREA_TEMPLATES folder of the USB storage device. (If the file does not exist, create a USER_AREA_TEMPLATES folder and save the template file to be copied to the printer below first) - Connect the USB storage to the printer. - Select Load from the Printer Setup menu using the up and down buttons. - Loading message is displayed while loading, and when loading is completed, USB loading completion message is displayed. - Go to Save File menu then, check the template file is normally saved to the printer.

List	Explanation
Image	**Explanation** Saves image file to a USB storage device, or load the image from USB storage (*.pcx) **File path** F:\ USER_AREA_Images • **Save Function Explanation** - Connect a USB storage to the printer. - Select Save on the menu using the up and down buttons. - Image files are stored in the USER_AREA_Images folder of USB storage device. (USER_AREA_Images folder is automatically created) • **Load Function Explanation** - Check whether the image file exists in the USER_AREA_Images folder of the USB storage device. (If there is no file, create the USER_AREA_Images folder and save the image file to be copied to the printer below first.) - Connect the USB storage to the printer. - Select Load from the Printer Setup menu using the up and down buttons. - Loading message is displayed while loading, and when loading is completed, USB loading completion message is displayed. - Go to Save File menu then, check the image file is normally saved to the printer.

List	Explanation
Download Font	**Explanation** Saves download font file to a USB storage device, or load the download font from USB storage. **File path** F:\ USER_AREA_FONTS • **Save Function Explanation** - Connect a USB storage to the printer. - Select Save on the menu using the up and down buttons. - Download Font files are stored in the USER_AREA_FONTS folder of USB storage device. (USER_AREA_FONTS folder is automatically created) • **Load Function Explanation** - Check if the downloaded font file exists in the USER_AREA_FONTS folder of the USB storage device. (If there is no file, create the USER_AREA_FONTS folder and save the download font file to be copied to the printer below first.) - Connect the USB storage to the printer. - Select Load from the Printer Setup menu using the up and down buttons. - Loading message is displayed while loading, and when loading is completed, USB loading completion message is displayed. - Go to Save File menu then, check the download font file is normally saved to the printer.

3-6-9-3 Firmware Update

Firmware can be updated through USB storage.

F/W Update	**Explanation** Printer firmware update available using the USB storage directly without any communication. **File path** F:\ FW_DOWNLOAD **File name** “XD7-2xd_Vxx.xx_STD_mmddyy.fls” in F:\ FW_ DOWNLOAD folder. • **Download process explanation** - Check firmware file(*.fls) is in FW_ DOWNLOAD folder of USB storage. (If there is no folder, please create FW_download folder and save the firmware file (* .fls) to it.) - Connect USB storage to the printer. - Select “F/W Update” from the “Files” menu. - Select the firmware download menu. - If the message "F/W Downloading" is displayed, the firmware download has started normally. - When the firmware download is completed successfully, the message "Printer Restart" is displayed and the rebooting process is automatically performed.

3-6-10 Tools Menu Explanation

List		Explanation
Self Test		**Explanation** Prints for self-test
Factory Reset		**Explanation** Initializes the printer settings to factory default
Dump Mode		**Explanation** Diagnoses communication status when printing is not normal **Default Value** Off **Variable Value** Off, Print, USB Memory
Print Head Check		**Explanation** Dot-out check of head through printing
LCD	Dead Pixel Test	**Explanation** LCD pixel test function
	Touch Position Test	**Explanation** LCD touch position test function (Touch Position Test is supported on Touch Screen Model only)
	Backlight Brightness	**Explanation** Setting backlight brightness **Default Value** 70 **Variable Value** 10 ~ 100
Real Time Clock		**Explanation** Setting RTC date and time Setting RTC date and time format **Date format** YYYY-MM-DD, YYYY/MM/DD, MM-DD-YYYY, MM/DD/YYYY, DD-MM-YYYY, DD/MM/YYYY **Time format** 12H, 24H

Language Setting	**Explanation** Setting language to be displayed on the LCD **Default Value** English **Variable Value** English, Korean, Japanese, Chinese(Traditional), Chinese(Simplified), German, French, Spanish, Thai, Italy, Norway, Portuguese, Swedish, Danish, Dutch, Finnish, Czech, Romanian, Russian, Polish, Turkish
Emulation	**Explanation** Setting printer emulation **Default Value** AUTO **Variable Value** AUTO(SLCS, BPL-Z, BPL-E), BPL-D, PDF
USB Serial Number	**Explanation** Checks USB serial number
Security	**Explanation** Setting a password to restrict printer settings **Default Value** Disable **Variable Value** Disable, Enable
Demo Print	**Explanation** Demo format output function
Reprint Mode	**Explanation** A feature that allows you to reprint the last printed label **Default Value** Disable **Variable Value** Disable, Enable

3-6-11 Info Menu Explanation

List	Explanation
Printer Info	**Explanation** Checking the printer usage information
Installation & Usage	**Explanation** Site linking(QR code) for installation and usage instructions
Troubleshooting	**Explanation** Site linking(QR code) for troubleshooting
Contact US	**Explanation** Site linking(QR code) for technical support

4. Self-test

The self-test checks whether the printer has any problems.
The self-test checks the following;

1) Make sure that the media has been installed properly.

2) Turn on the power while holding down the Feed button( ).
   The self-test begins. (It takes about 10 seconds before starting self-test)

3) The self-test prints the current printer configuration information.

4) After the self-test results are printed, a printer enters into print ready mode.

If the printer does not function properly, contact an authorized dealer.

5. Detailed Features

5-1 Stand-alone Configuration Mode

• This function is supported on standard model(without LCD) only.

5-1-1 Start Stand-alone Configuration Mode and execute each function

1) The Pause button( ) is pressed for two seconds while in Print Ready Mode.

2) Both LEDs will change to orange color, then release the Pause button( )
The printer will be set to Stand-alone configuration mode.

3) When the printer enters into this mode, the status of LED 1 and LED 2 are changed sequentially.

4) When the Feed button( ) is pressed at specific LED color combination, the corresponding printer operation will be executed.

5-1-2 Function List Of Stand-alone Configuration Mode

Sequence Number	LED 1	LED 2		Printer Operation
1	1	2	Blink4 times	Self Test
2		2	Blink4 times	Print File List
3		2	Blink4 times	Factory Reset
4	1	2	Blink4 times	Gap Calibration
5		2	Blink4 times	Black Mark Calibration
6		2	Blink4 times	Data Dump Mode
7	1	2	Blink4 times	Demo Mode
8		2	Blink4 times	Reserved
9		2	Blink4 times	Delete Downloaded Items

- This information can be printed out by printer self-test.
- Contact the customer center if the printer does not enter stand-alone configuration mode.

5-2 Pause/Cancel

• During multiple-page print jobs, the Pause(), Cancel button()
can be used to pause printing and cancel the print job altogether, respectively.

5-2-1 Pause/Resume Function

1) Standard Model

1) When printing, press the Pause button ()

2) The printer will pause after finishing the current media printing and the status of LED will be as follows.
   - LED 1: Green Blink
   - LED 2: Red On

3) While the print job is paused, press the Pause button () again to resume printing.

2) LCD Model

1) When printing, press the Pause button ()

2) The printer will pause after finishing the current media printing and the status of LCD will be as follows.
   - LCD Display: PAUSE

3) While the print job is paused, press the Pause button () again to resume printing.

5-2-2 Print Cancellation

• The following processes occur in the print cancellation mode.
- All label printing cancelled
- All data received in the printer communications buffer deleted.
- All received data deleted.

1) Standard Model

1) During printing and/or pause mode, press the Cancel button (✕) enters the print cancellation mode.

2) The LED Status in the print cancellation mode can be as follows.
- LED 1: Green On
- LED 2: Red Blink

3) While in the print cancellation mode, press the Cancel button (✕) again to return to print ready mode.

2) LCD Model

1) During printing and/or pause mode, press the Cancel button (✕) enters the print cancellation mode.

2) The LCD Status in the print cancellation mode can be as follows.
- LCD Display: CANCEL

3) While in the print cancellation mode, press the Cancel button (✕) again to return to print ready mode.

Contact the authorized dealer if the printer does not execute pause/resume function.

5-3 Smart Media Detection

• Media with gap and black mark can be identified without additional settings. 3~5 pages
of media will be used depending on the types of media.

Smart Media Detection function is executed in the followings cases

- When the printer is installed first time, it is executed by pressing the Feed button( ).
- If the printer is installed first time, printer command will execute Smart Media Detection.
- When change of media length or type is detected during feeding or printing.
- When the different media type command is entered from the configured media type.
- After factory reset.

If smart media detection fails, please proceed gap or B/M sensor auto-calibration accordingly

5-4 Gap Sensor Auto Calibration Mode

• Gap sensor auto calibration mode is used when the printer does not detect a gap on the media correctly.

Generally a printer is set to detect most types of gap but sometimes it fails to detect and keep feeding the media without a stop when special media used. In such case, use gap sensor auto calibration mode function for a proper detection.

1) Make sure that media roll has been installed properly.

(1) Standard Model
In stand-alone configuration mode at sequence number 4,
pressing the Feed button( ) activates gap sensor auto calibration mode.
(refer to 5-1).

(2) LCD Model
In print ready mode press "**Sensor** → **Gap Calibration**" to process gap sensor auto Calibration mode.

* Please refer Tools Menu Explanation (3-6-8) for more information.

Contact the customer center if the printer does not execute gap sensor auto calibration mode function.

5-5 B/M Sensor Auto Calibration Mode

• Black mark sensor auto calibration mode is used when the printer does not detect a black mark on the media correctly.

Generally a printer is set to detect most types of black mark but sometimes it fails to detect and keep feeding the media without a stop when special media used. In such case, use black mark sensor auto calibration mode function for a proper detection.

1) Make sure that media roll has been installed properly.

(1) Standard Model
In stand-alone configuration mode at sequence number 5,
pressing the Feed button( ) activates black mark sensor auto calibration mode.
(refer to 5-1).

(2) LCD Model
In print ready mode press "**Sensor → Black Mark Calibration**"
to process black mark sensor auto Calibration mode.

* Please refer Tools Menu Explanation (3-6-8) for more information.

Contact the customer center if the printer does not execute black mark sensor auto calibration mode function.

5-6 Media Sensor Manual-Calibration

• Manual-calibration of media detection can be used when the printer cannot detect a media gap (or black mark) even after auto-calibration has been executed.

Users can calibrate sensor parameters in detail by using the BIXOLON Utility program provided by the manufacturer.

The BIXOLON Utility can be downloaded from the BIXOLON website. (www.bixolon.com)

Users can calibrate printer to detect gap (or black mark) manually by using the BIXOLON Utility. For More information, please refer BIXOLON Utility manual.

Please make sure the printer is connected and execute the BIXOLON Utility program. Please the “Calibration Setting” Button after setting the interface type.

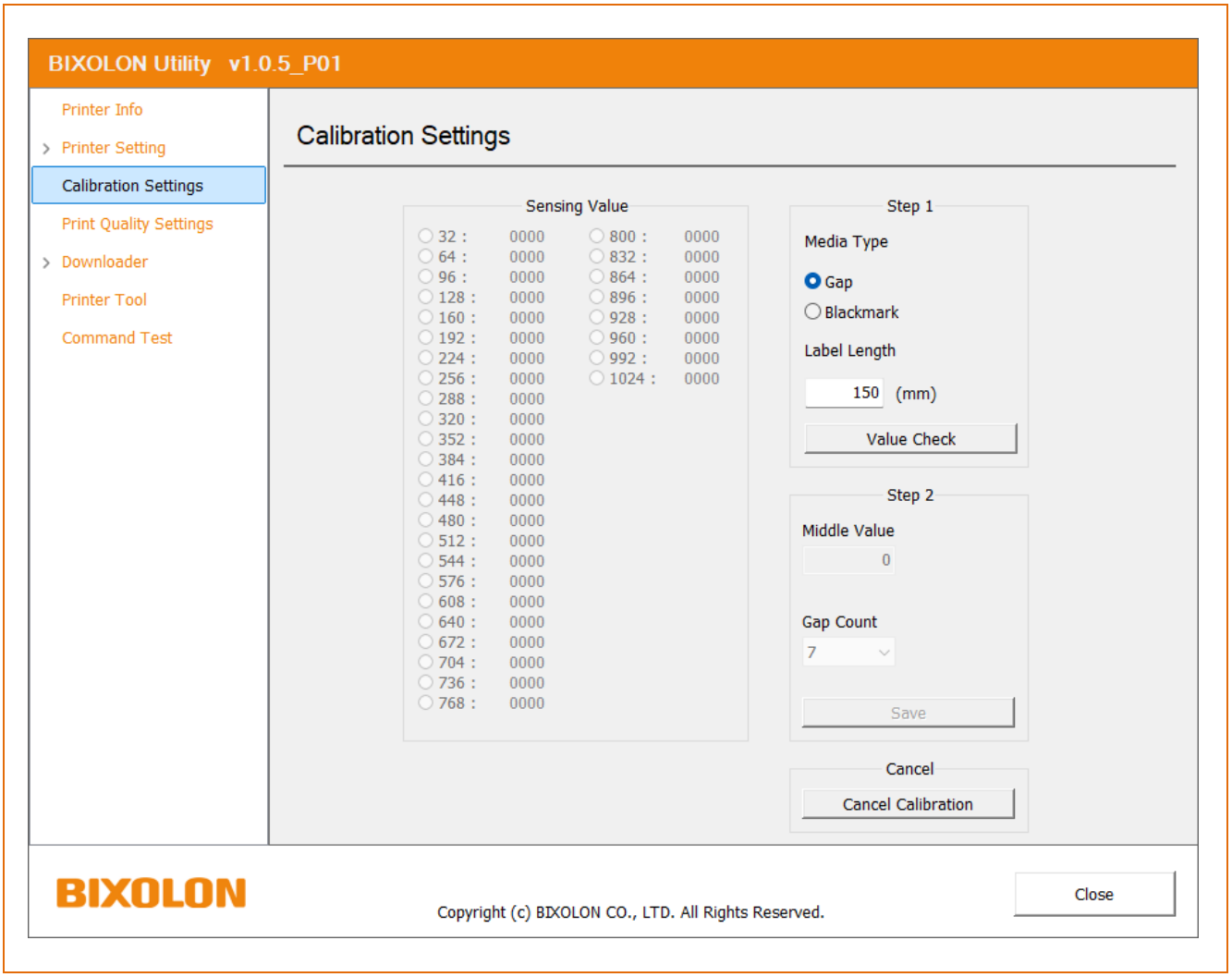

1) Select the sensing type and input the label length by millimeter and click “Check Sensing Value” button. Then printer starts calibration.

2) Once the calibration is done, scanned values will appear on the screen after calibration.

3) Optimal sensing values will appear in black bold letters on the left of the utility screen and select one of the values and click on “Save Calibration”

4) If chosen value does not work properly, please try the other values among the black bold letters.

5) To go back to the initial value, please click on “Cancel Calibration”

Contact the customer center if the printer does not enter media sensor manual-calibration mode.

5-7 Data Dump Mode

• This function can be used to diagnose the communication issues when the printer does not work properly.

In this mode, the received data are not analyzed and printed, instead they are dumped in hex format without processing.

Turn the printer off and on to recover to the print ready mode.

(1) Standard Model

In stand-alone configuration mode at sequence number 6, pressing the Feed button( ) activates the received data print mode. (refer to 5-1).

(2) LCD Model

- In Print Ready mode, selecting **"Tools → Dump mode → Print"** activates the received data print mode.
- In Print Ready mode, selecting **"Tools → Dump mode → USB Memory"** activates the mode that saves received data to a USB memory device.
- In Dump mode, selecting **"Tools → Dump mode → Off"** deactivates Dump mode.

* Please refer Tools Menu Explanation (3-6-10) for more information.

Contact the customer center if the printer does not enter data dump mode.

5-8 Factory Reset

• This function is used to factory reset the printer settings.

1) Make sure that media roll has been installed properly.

(1) Standard Model

In stand-alone configuration mode at sequence number 3, pressing the Feed button( ) will reset the printer settings to factory default values.(refer to 5-1).

* The printer will be rebooted automatically.

(2) LCD Model

In Print Ready mode, selecting "**Tools→ Factory Reset**" will reset the printer settings to factory default values.

* Please refer Tools Menu Explanation (3-6-10) for more information.
* The printer will be rebooted automatically.

Contact the customer center if the printer does not enter factory reset function.

5-9 SWC (Simple Wi-Fi Connect)

• Connect the printer to a network using SWC(Simple Wi-Fi Connect) mode.
** blink rate of “Pulse” is slower than blink rate of “Flash”

• Make sure that media roll has been installed properly.

1) Standard Model

(1) Press the Feed button( ) for more than 3 seconds
to enter SWC(Simple Wi-Fi Connect) Mode

(2) The LED status in the SWC mode ready can be as follows.
- LED 1: Green On
- LED 2: Red Blink(pulse)

(3) Printer’s LED1 Green pulse indicates that the printer is in SWC Mode.
you can set network through Host Devices.
- LED 1: Green Blink(Flash → pulse)
- LED 2: Green On

(4) Once the network is not set correctly, LED1 will flash Orange,
and try entering SWC Mode again.
- LED 1: Orange Blink(pulse)
- LED 2: Green On

2) LCD Model

(1) Enter SWC(Simple Wi-fi Connect) Mode using buttons.
In Print Ready mode, selecting “**Interface** → **WLAN** → **SWC** → **Execute SWC”** will enter SWC mode.

(2) Printer’s LCD Display “SWC Mode” indicates that the printer is in SWC Mode.
You can set network through Host Devices
- LCD Display: ”Preparing…” → ”SWC Mode”

(3) Once the network is not set correctly, LCD will Display Error Message,
and try entering SWC Mode again.
- LCD Display: ”Password Error Return to SWC mode”

5-10 Print Standby Mode

5-10-1 About Print Standby Mode

The printed area may become out of range of media if the media is not in the accurate printing position when the cover is opened and closed.
The printer is put into print standby mode instead of print ready mode when the cover is closed in order to prevent this problem, and it waits for additional user input.

1) Standard Model
The LED status in the print standby mode can be as follows.
- LED 1: Green Blink
- LED 2: Green Blink

2) LCD Model
The LCD status in the print standby mode can be as follows.
- LCD Display: STANDBY

The data received during print standby mode will be printed after the printer recovers to print-ready mode.

5-10-2 How to switch the printer from Standby Mode to Print Ready Mode

- Press the Pause button ( ) to switch to print ready mode without feeding any media.
- Press the Feed button ( ) to feed one page to align the media position and switch to the print ready mode.

Contact the customer center if the printer does not execute print standby mode function.

5-11 Media Installation Method of Peeler (Option) Model

• Use a peeler to separate the printed media from the liner automatically.
To use peeler, install media in the following ways:

1) Open the media cover.

2) Open the peeler cover.

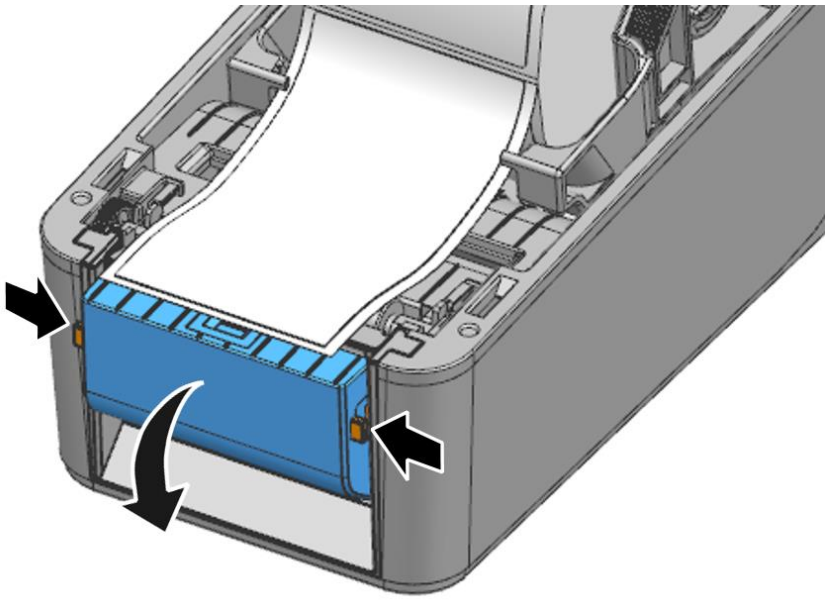

3) Set the peeler switch 'ON' position and check to LED has turned on.

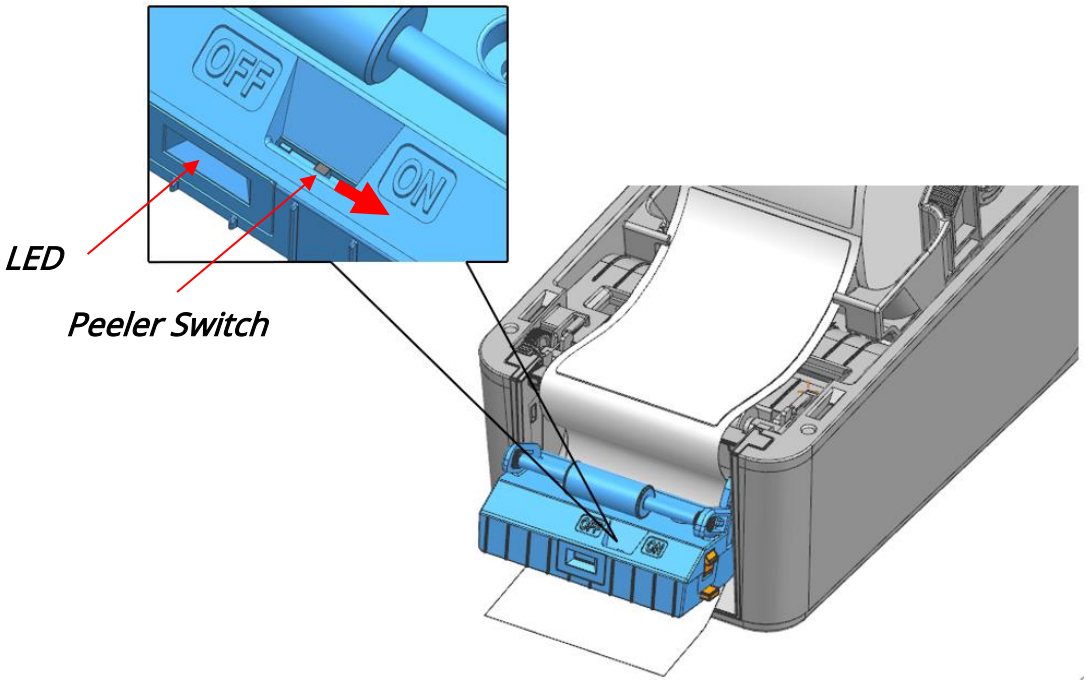

4) Remove the media and insert the media through the slot.

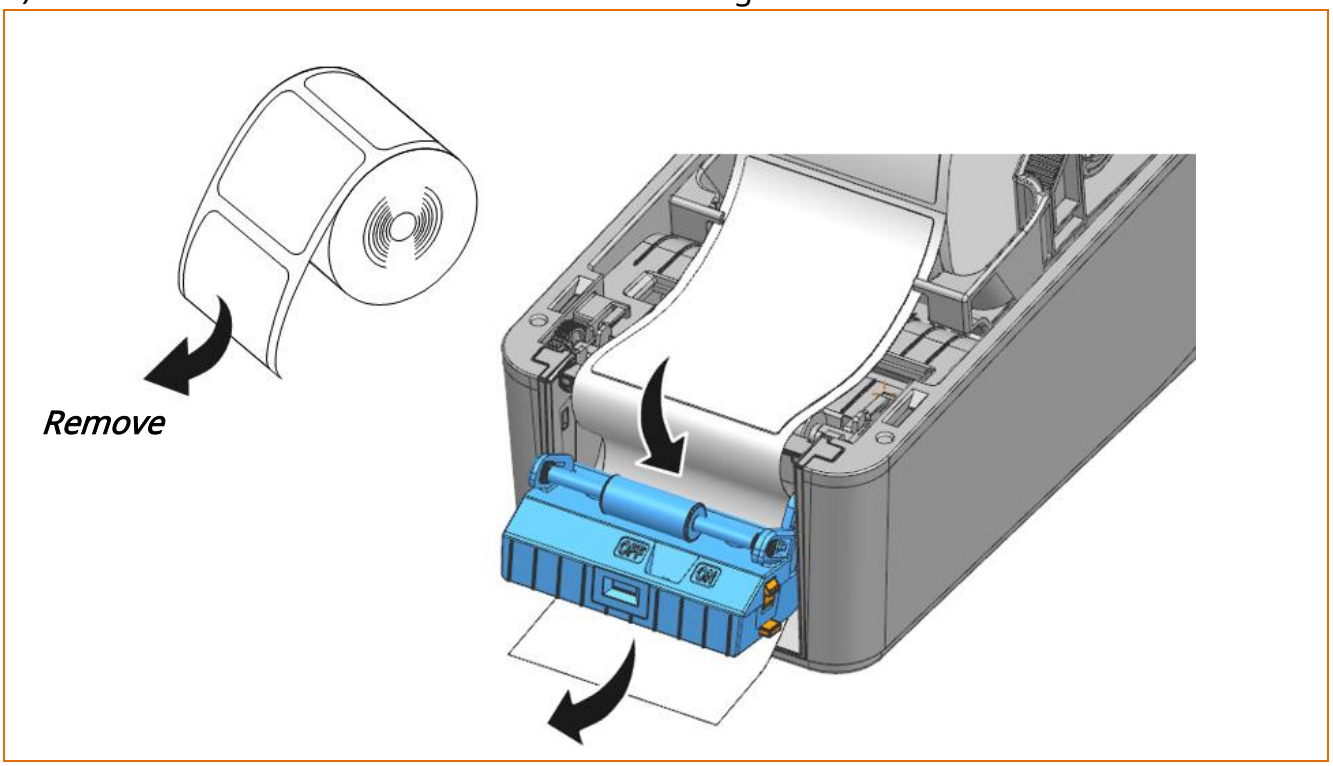

5) Close the peeler cover until a click sound is heard.

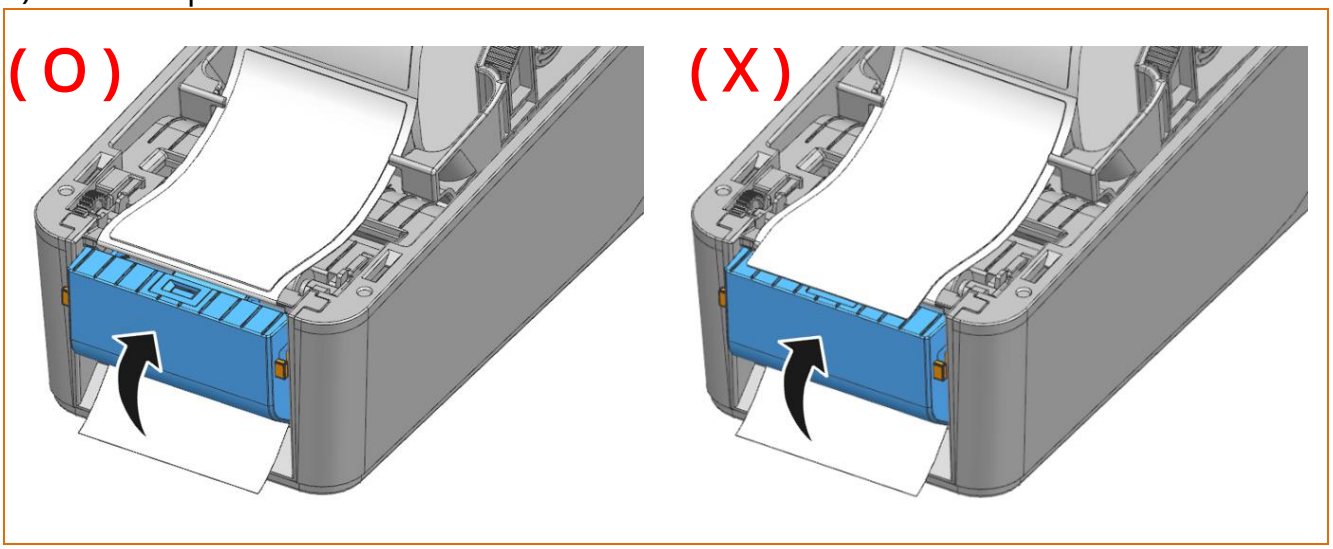

6) Close the media cover until a click sound is heard.

- When opening or closing the cover, be careful not to pinch your fingers.
- The peeler function is only available for Gap media.
- When the peeler is switched on, the next label will not be printed unless the printed label is removed from the peeler.
- When the peeler is switched off, the peeler does not work.
- The print head gets extremly hot while printing or after the printing, this can cause serious burns. Do not touch the print head.

5-12 Using Fan-Fold or External Media

5-12-1 When using Fan-Fold media

Supplying fan-fold media to the printer externally is done as follows.

1) Insert the media to at the rear of the printer as shown below.

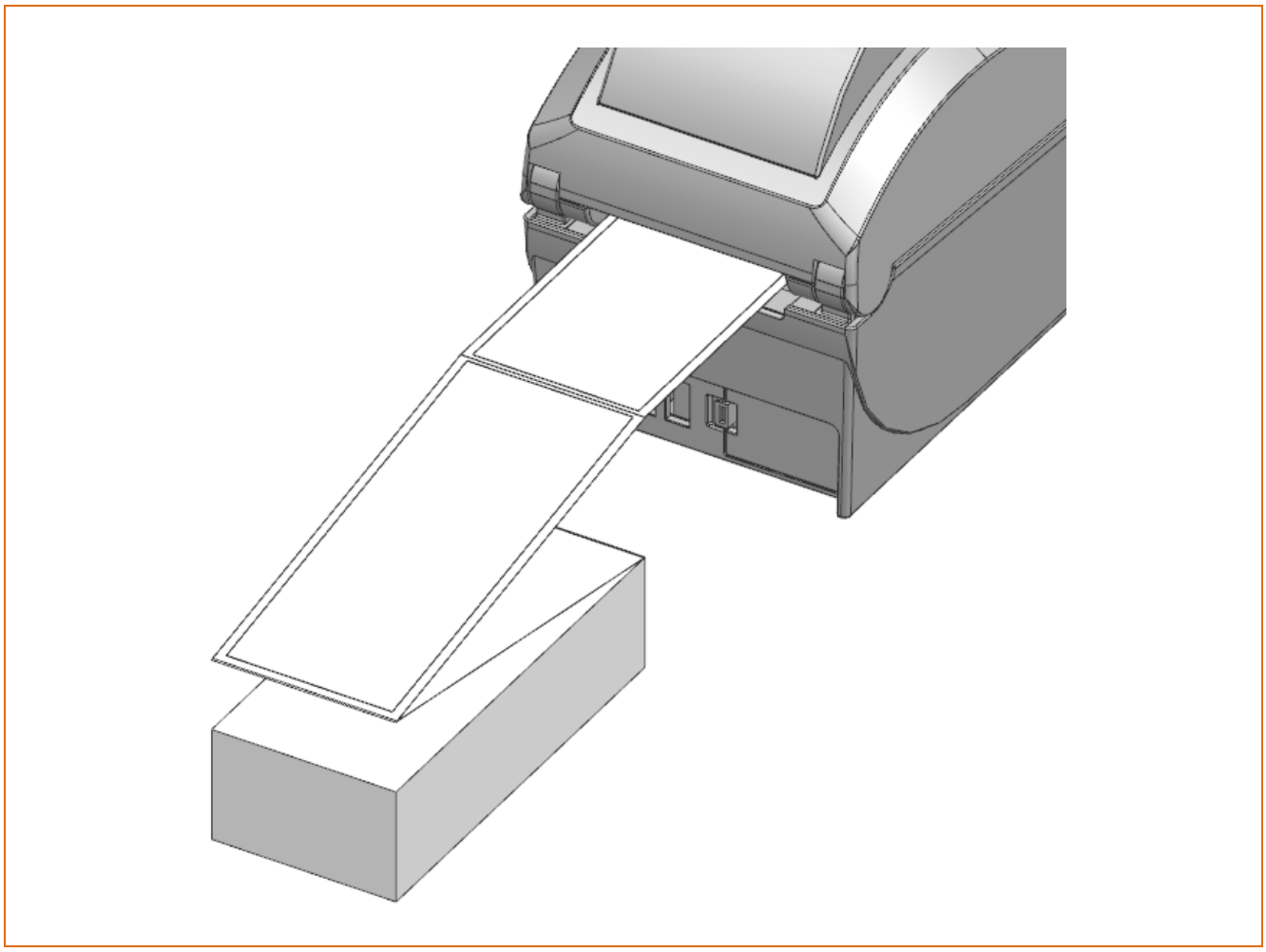

2) Adjust media holders to the media width by using the fix tool.

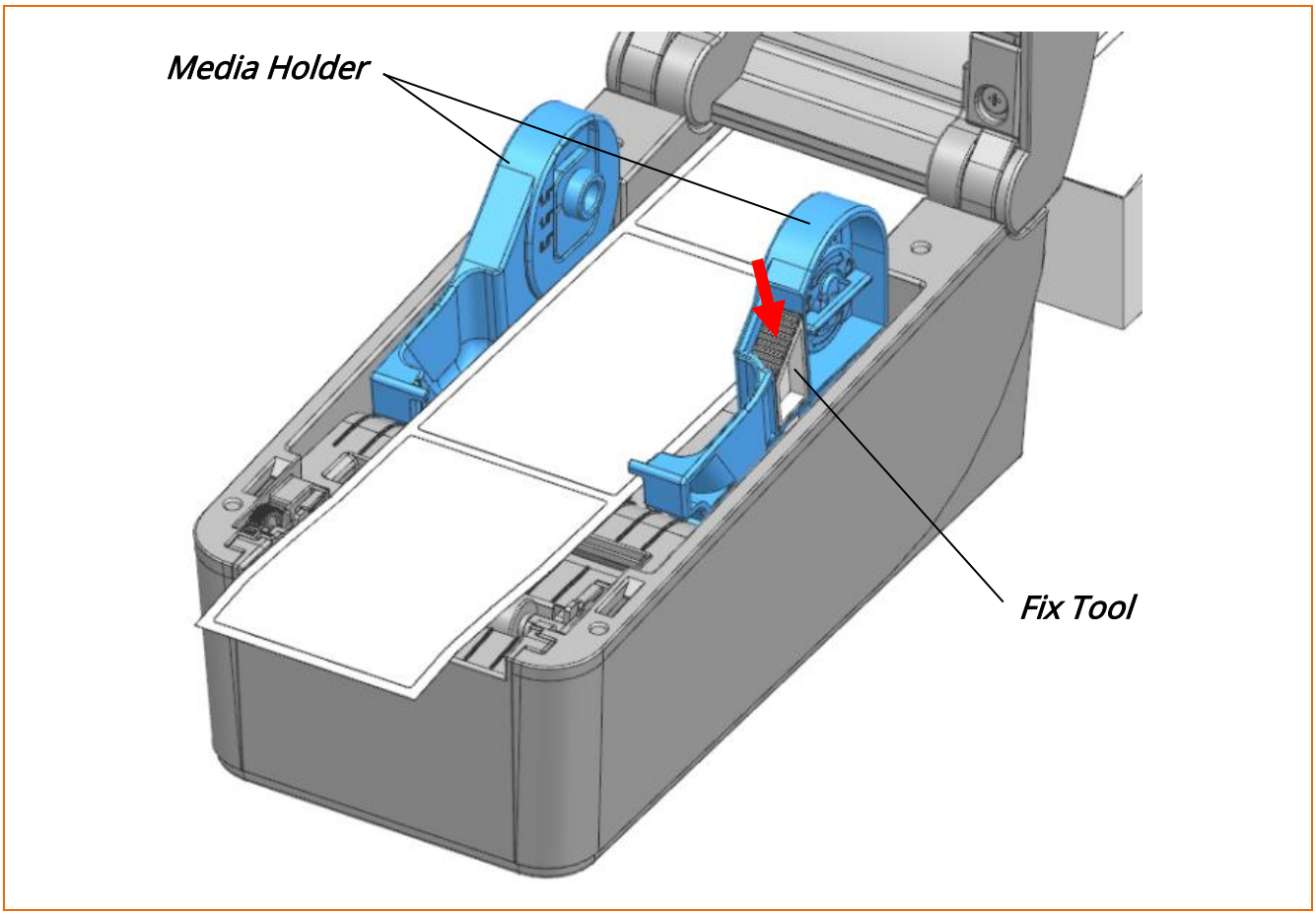

- Do not open the print cover while the printer is operating, otherwise the printer may be damaged.
- To prevent data loss, replace media only when the printer is not receiving any data.
- Be aware of physical damage caused by external media when operating the printer

5-13 Auto Cutter (Option)

• For auto media cutting, products equipped with auto cutter are available.
Auto-Cutter can be controlled by command.
The media installation method is the same as media with no auto cutter.

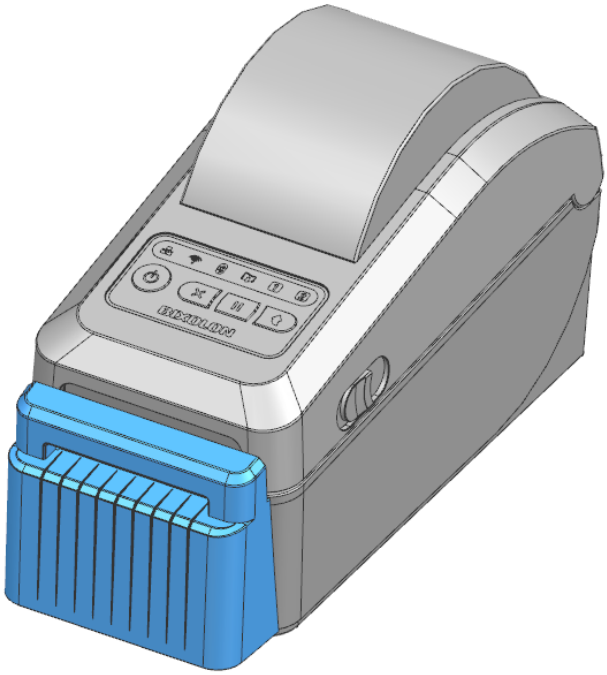

Please refer CUT(Auto-cutter Enable/Disable) of Programming (SLCS) Manual or Unified Label Utility-II Manual for more information.

- When opening or closing the cover, be careful not to pinch your fingers.
- Do not open the media cover while the printer is operating.
  The printer may be damaged.
- Change the media when the printer is not receiving data, or data may be lost.
- Never insert objects or fingers while performing the cutting function.
  This can cause serious bodily injury.
- Be careful not to touch the cutter blade with your hand.
  There may be a risk of personal injury.
- The print head gets extremly hot while printing or after the printing, this can cause serious burns. Do not touch the print head.

6. Printer Maintenance

Printing quality might be degraded by dust, foreign substance, adhesive substance, or other pollution materials stuck in the printer head or inside the printer.

When dirty, clean the print head as follows

6-1 Cleaning Printer Head

• Be sure to turn the printer off.

1) Open the media cover and then remove adhesive foreign substances or other pollution materials with the cloth or cotton swab soaked in alcohol for medical.

2) After cleaning the head, do not use the printer until the alcohol used for cleaning evaporates completely. (1~2 min)

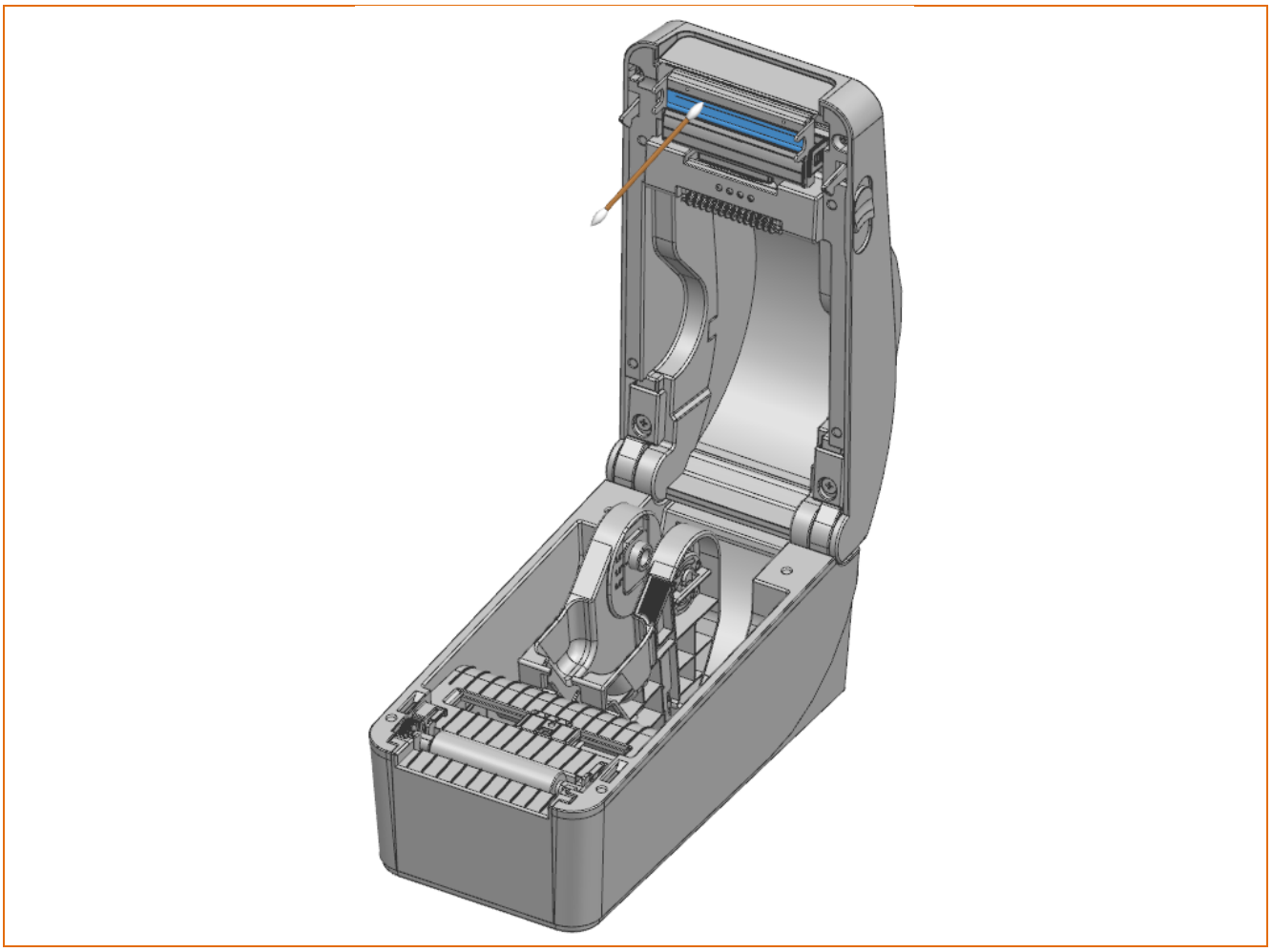

Perform the cleaning process each time the media roll is replaced to prevent print quality deterioration.

- Be sure to clean after turning the printer off.
- Be careful not to leave scratches in the print head.
  The printer may be damaged.
- Print head is very hot while the printer is printing, so clean the printer after cooling it sufficiently with power off.
- Do not touch heated area of print–head when cleaning.
  Personal injury may result from static electricity, etc.

6-2 Cleaning Sensors, Roller or/and media Path

• Be sure to turn the printer off.

1) Open the media cover and remove the media.

2) Remove any dust or foreign substance using dry cloth or cotton swab.

3) Soak the cloth or cotton swab in alcohol for medical use and use it to remove adhesive foreign substances or other pollution materials.

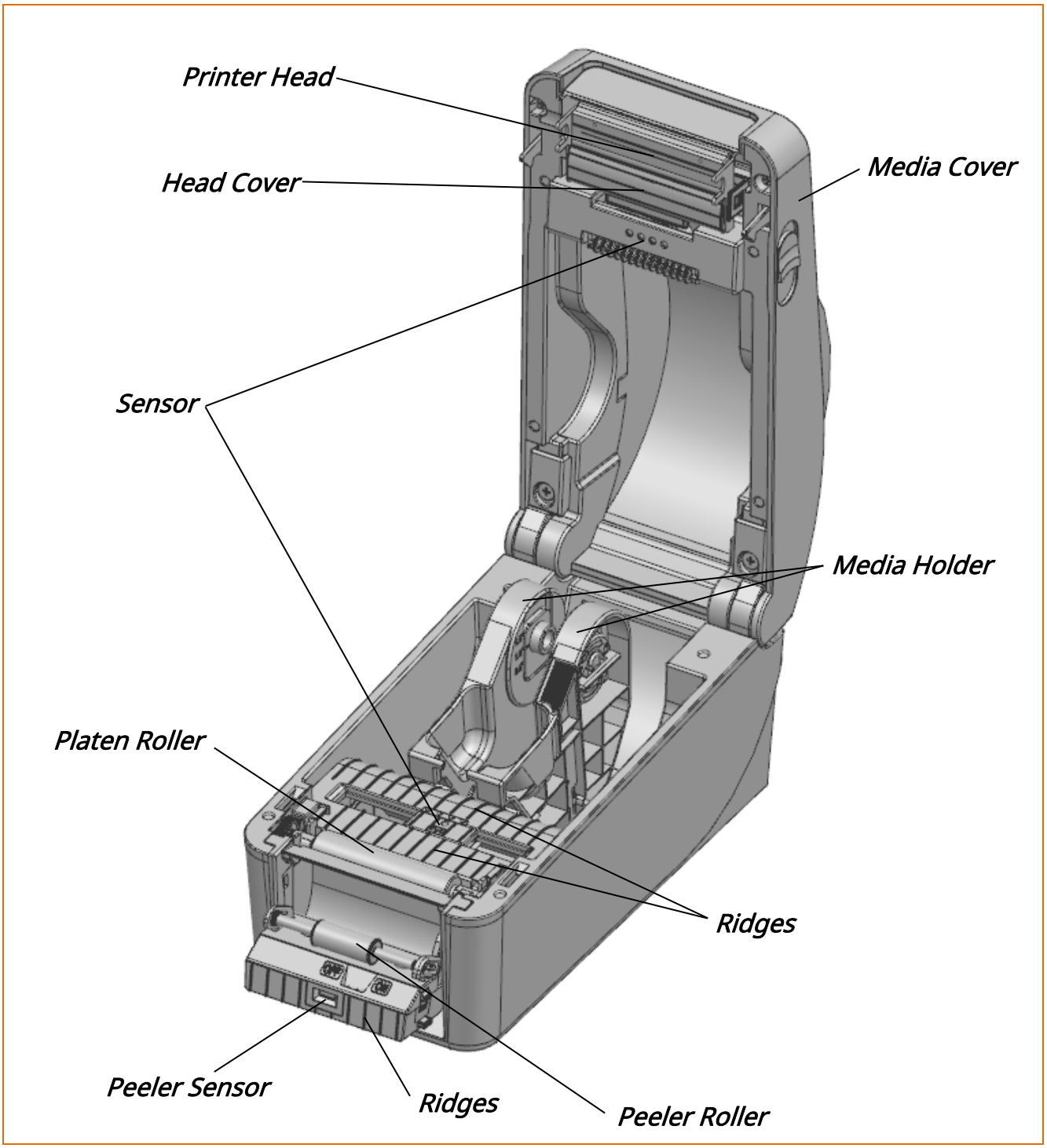

- Clean the parts when there is a degradation of performance in printing quality or media detection.
- After cleaning the parts, do not use the printer until the alcohol evaporates completely (1~2 min) and the printer has completely dried.
- Be sure to use medical alcohol only. If not, it may cause printer damage.

6-3 Replacing Roller

• Be sure to turn the printer off.

1) Open the media cover and remove the media.

2) Pull the roller holders and separate the roller assembly.

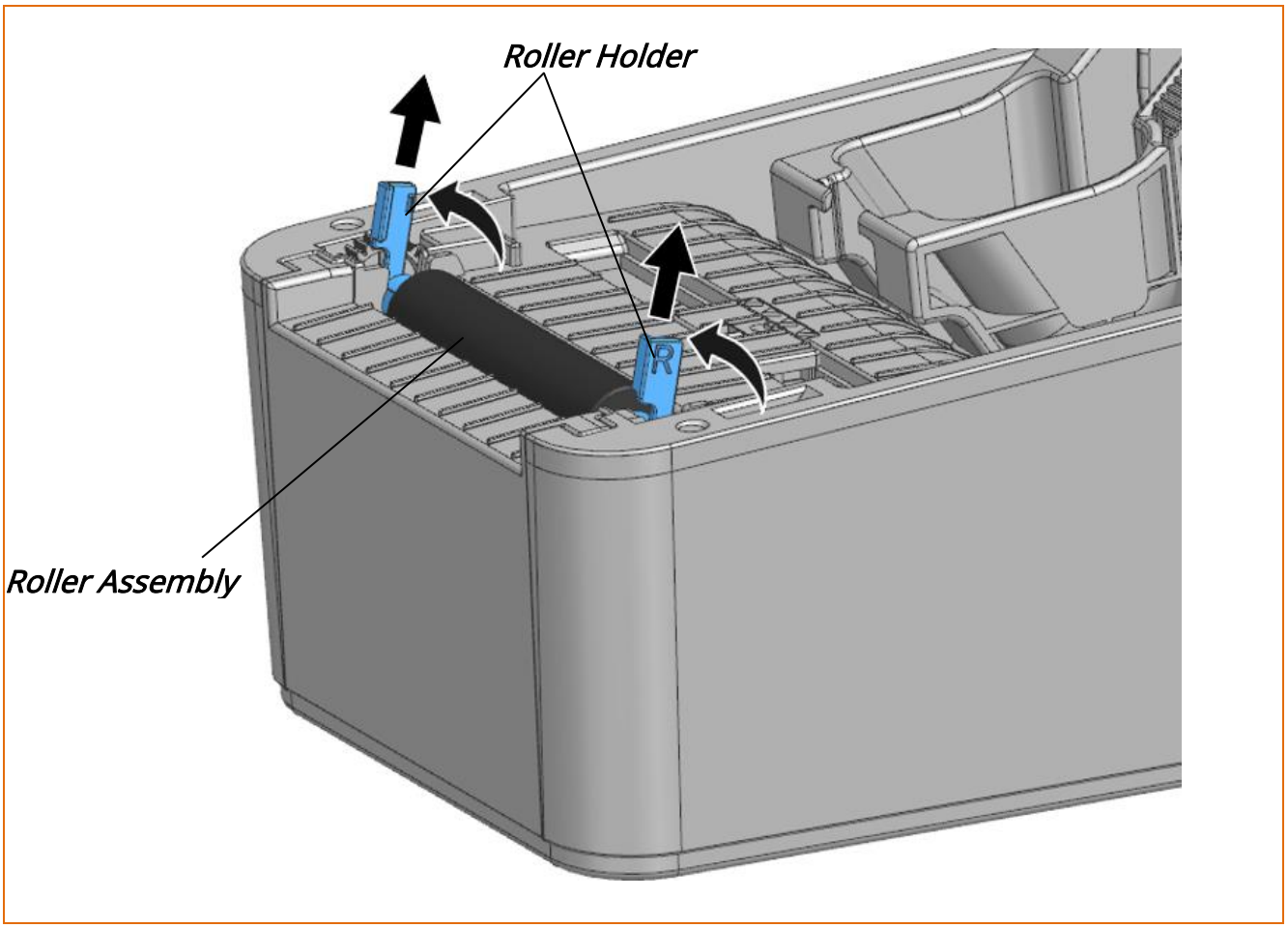

3) Assemble new roller assembly in reverse order.

- Make sure to turn the printer power off prior to replacing.
- The print head gets extremly hot while printing or after the printing, this can cause serious burns. Do not touch the print head.

7. Specifications

7-1 Printer Specifications

Item		Description
Printer	Printing Method	Direct Thermal Printing
	Dot Density	XD7-20d: 203 dpi (8 dot/mm) XD7-23d: 300 dpi (11.8 dot/mm)
	Printing Width	XD7-20d: Max. 54 mm (Max. 2.13”) XD7-23d: Max. 56.9 mm (Max. 2.24”)
	Printing Speed	XD7-20d: Max. 203 mm/sec (Max. 8ips) XD7-23d: Max. 152 mm/sec (Max. 6ips)
	Printing Length	Up to 2,000mm
Media	Roll Width	15 ~ 60 mm (0.59 ~ 2.36”)
	Roll	Max. 127 mm (Max. 5”)
	Core	12.5 ~ 38.1 mm (0.5” ~ 1.5”)
	Thickness	0.06 ~ 0.20mm
AC/DC Adapter	Input Voltage	AC 100 - 240V
	Frequency	50/60 Hz
	Output Voltage	DC 24V ±5%
	Output Current	2.5A
Usage Conditions	Temperature	0 ~ 40 ℃ (Operating) -20 ~ 60 ℃ (Storage)
	Humidity (except for media)	10 ~ 80 % RH (Operating) 10 ~ 90 % RH (Storage)

Print speed may vary depending on the data transfer speed and the combination of command.

- In case of danger, turn off the power to cut the connection.
- The power cord must be grounded to ensure safety and reduce electromagnetic interference

7-2 Label Types Specifications

• The label types used with this printer are as follows.

- Control Labels: PC
- Other Labels: PET

Revision History

Ver.	Date	Description
1.00	17-11-2025	New