# 2D Presentation Scanner

## - TS100 -

# User Manual

Version 1.8

# Change Log

| Date | Change Description | Version |
|---|---|---|
| 2022/03/31 | First Published Version | 1.0 |
| 2022/05/18 | Add USB COM Port Emulation Barcode | 1.1 |
| 2022/11/7 | Update 2.2 (Add plug & play description), Add 2.17 Intercharactor Delay and 2.18 QR Code URL Link | 1.2 |
| 2023/02/24 | Update 1.5.1 LED Indicator & 2.1.2 Factory Defaults | 1.3 |
| 2023/03/24 | Add Note to the 1.5.1 LED Indicator | 1.4 |
| 2024/04/12 | Update 2.1.2 Factory Defaults | 1.5 |
| 2024/05/30 | Add Febraban Decode | 1.6 |
| 2024/09/20 | Add Depth of Field | 1.7 |
| 2024/11/12 | Add Transmit AIM Code ID Character | 1.8 |

# Preface

## About This Manual

Thank you for purchasing the Unitech product.
This manual explains how to install, operate and maintain our product.
No part of this publication may be reproduced or used in any form, or by any electrical or mechanical means, such as photocopying, recording, or information storage and retrieval systems, without permission in writing from the manufacturer. The material in this manual is subject to change without notice.

## Regulatory Compliance Statements

### FCC Warning Statement

This device has been tested and found to comply with the limits for a Class B digital device, pursuant to part 15 of the FCC rules. These limits are designed to provide reasonable protection against harmful interference in a residential installation. This equipment generates, uses and can radiate radio frequency energy and, if not installed and used in accordance with the instructions, may cause harmful interference with radio communications. However, there is no guarantee that interference will not occur in a particular installation. If this equipment does cause harmful interference with radio or television reception, which can be determined by turning the equipment off and on, the user is encouraged to try to correct the interference by one or more of the following measures:

–Reorient or relocate the receiving antenna.
–Increase the separation between the equipment and receiver.
–Connect the equipment into an outlet on a circuit different from that to which the receiver is connected.
–Consult the dealer or an experienced radio/TV technician for help.

© 2024 Unitech Electronics Co., Ltd. All rights reserved.
Unitech is a registered trademark of Unitech Electronics Co., Ltd.
All product and company names are trademarks, service marks, or registered trademarks of their respective owners

1. This transmitter must not be co-located or operating in conjunction with any other antenna or transmitter.
2. This device complies with FCC RF radiation exposure limits set forth for an uncontrolled environment. To maintain compliance with FCC RF exposure requirements, avoid direct contact to the transmitting antenna during transmitting.
3. Any changes or modifications (including the antennas) made to this device that are not expressly approved by the manufacturer may void the user's authority to operate the equipment.

Operation on the 5.15 - 5.25GHz frequency band is restricted to indoor use only. The FCC requires indoor use for the 5.15-5.25GHz band to reduce the potential for harmful interference to co-channel Mobile Satellite Systems. Therefore, it will only transmit on the 5.25-5.35 GHz, 5.47-5.725 GHz and 5.725 – 5.850 GHz band when associated with an access point (AP).

## FCC Label Statement

This device complies with part 15 of the FCC rules. Operation is subject to the following two conditions:

1. This device may not cause harmful interference.
2. This device must accept any interference received, including interference that may cause undesired operation.

## RF Radiation Exposure Statement

For body contact during operation, this device has been tested and meets FCC RF exposure guidelines when used with an accessory that contains no metal and that positions the handset a minimum of 1.5 cm from the body. Use of other accessories may not ensure compliance with FCC RF exposure guidelines.

## Canadian Compliance Statement

This Class B Digital apparatus meets all requirements of the Canadian Interference-Causing Equipment Regulations.

Cet appareil numerique de la classe B respecte les exigences du Reglement sur le material broilleur du Canada.

© 2024 Unitech Electronics Co., Ltd. All rights reserved.
Unitech is a registered trademark of Unitech Electronics Co., Ltd.
All product and company names are trademarks, service marks, or registered trademarks of their respective owners

## European Conformity Statement

Unitech Electronics co., Ltd herewith declares that the Unitech product is in compliance with the essential requirements and all other provisions of the RED 2014/53/EU directive, the EMC 2014/30/EU directive and the Low Voltage 2014/35/EU directive.
The declaration of conformity is available for download at :
https://portal.Unitech.eu/public/Safetyregulatorystatement

## CE RF Exposure Compliance

This device meets EU requirements (2014/53/EU) on the limitation of exposure of the general public to electromagnetic fields by way of health protection.
For body-worn operation, this device has been tested and meets the ICNIRP guidelines and the European Standard EN 62209-2, for use with dedicated accessories, SAR is measured with this device at a separation of 0.5 cm to the body, while transmitting at the highest certified output power level in all frequency bands of this device. Use of other accessories which contain metals may not ensure compliance with ICNIRP exposure guidelines.

## CE Mark Warning

This equipment complies with the requirements of Directive 2014/53/EU of the European Parliament and Commission from 24 May, 2014 governing Radio and Telecommunications Equipment and mutual recognition of conformity.

## RoHS Statement

This device conforms to RoHS (Restriction of Hazardous Substances) European Union regulations that set maximum concentration limits on hazardous materials used in electrical and electronic equipment.

© 2024 Unitech Electronics Co., Ltd. All rights reserved.
Unitech is a registered trademark of Unitech Electronics Co., Ltd.
All product and company names are trademarks, service marks, or registered trademarks of their respective owners

# Waste electrical and electronic equipment (WEEE)

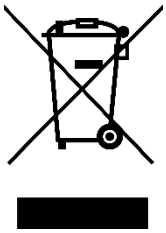

Unitech has set up a policy and process to meet the EU directive 2002/96/EC and update 2003/108/EC concerning electronic waste disposal.

For more detailed information of the electronic waste disposal of the products you have purchased from Unitech directly or via Unitech's resellers, you shall either contact your local supplier or visit us at : https://portal.Unitech.eu/public/WEEE

© 2024 Unitech Electronics Co., Ltd. All rights reserved.
Unitech is a registered trademark of Unitech Electronics Co., Ltd.
All product and company names are trademarks, service marks, or registered trademarks of their respective owners

# Taiwan NCC Warning Statement

## 低功率電波輻射性電機管理辦法

取得審驗證明之低功率射頻器材，非經核准，公司、商號或使用者均不得擅自變更頻率、加大功率或變更原設計之特性及功能。低功率射頻器材之使用不得影響飛航安全及干擾合法通信；經發現有干擾現象時，應立即停用，並改善至無干擾時方得繼續使用。前述合法通信，指依電信管理法規定作業之無線電通信。低功率射頻器材須忍受合法通信或工業、科學及醫療用電波輻射性電機設備之干擾。應避免影響附近雷達系統之操作。高增益指向性天線只得應用於固定式點對點系統。

注意事項:

1. 減少電磁波影響，請妥適使用。

© 2024 Unitech Electronics Co., Ltd. All rights reserved.
Unitech is a registered trademark of Unitech Electronics Co., Ltd.
All product and company names are trademarks, service marks, or registered trademarks of their respective owners

# Laser Information

The Unitech product is certified in the U.S. to conform to the requirements of DHHS/CDRH 21CFR Subchapter J and to the requirements of IEC 825-1. Class II and Class 2 products are not considered to be hazardous. The Unitech product contains internally a Visible Laser Diode (VLD) whose emissions do not exceed the maximum limits as set forth in the above regulations. The scanner is designed so that there is no human access to harmful laser light during normal operation, user maintenance or prescribed service operations.

The laser safety warning label required by the DHHS/IEC for the Unitech product's optional laser scanner module is located on the memory compartment cover, on the back of the unit.

* Laser information only applies to the products with laser components.

**CAUTION!** Use of controls or adjustments or performance of procedures other than those specified herein may result in hazardous laser light. Use of optical instruments with the scanner, including binoculars, microscopes, and magnifying glasses, with will increase eye damage. This does not include eyeglasses worn by the user.

# LED Information

The Unitech product contains LED indicator(s) or LED ring whose luminance is not harmful to human eyes during normal operation, user maintenance or prescribed service operations.

*LED information only applies to the products with LED components.

© 2024 Unitech Electronics Co., Ltd. All rights reserved.
Unitech is a registered trademark of Unitech Electronics Co., Ltd.
All product and company names are trademarks, service marks, or registered trademarks of their respective owners

# Battery Notice

1. To guarantee optimal performance, it is recommended that rechargeable batteries be replaced every year, or after 500 charging cycles are completed. It is normal for the battery to balloon or expand after one year or 500 cycles. Although it does not cause damage, it cannot be used again and must be disposed of according to the location's safe battery disposal procedures.
2. If a battery performance decreases more than 20%, the battery is at the end of its life cycle. Stop use and ensure the battery is disposed of properly.
3. The length of time that a battery lasts depends on the battery type and how the device is used. Conserve the battery life by doing the following:
   - Avoid fully uncharging the battery because this places additional strain on it. Several partial uncharges with frequent charges are better than a fully uncharged battery. Charging a partially charged battery does not cause harm to the unit.
   - Keep the battery cool. Avoid hot vehicles. For prolonged storage, keep the battery at a 40% charge level.
   - Do not leave the battery uncharged and unused for an extended period of time, the battery will wear out and the longevity of the battery will be at least half of one with frequent charges.
4. Protect battery life by not over or under charging the battery.
5. Please do not leave battery unused for long time without charging it. Despite Unitech’s safety precautions, the battery pack may begin to change shape. If so, stop using it immediately. Please check to see if you are using a proper power adapter to charge the battery or contact your service provider for service.
6. If you cannot charge the battery after it has been idle for an extended period of time and it begins to heat up, please do not try to charge it. It may not be functional anymore.
7. Please only use the original battery from Unitech. Using a third party battery can damage our products. Please note that when such damage occurs, it is not covered by your warranty.

© 2024 Unitech Electronics Co., Ltd. All rights reserved.
Unitech is a registered trademark of Unitech Electronics Co., Ltd.
All product and company names are trademarks, service marks, or registered trademarks of their respective owners

**CAUTION!**

- RISK OF EXPLOSION IF BATTERY IS REPLACED INCORRECTLY.
  DISPOSE OF USED BATTERIES ACCORDING TO THE INSTRUCTIONS.
- 電池若未正確更換，可能會爆炸。請用原廠建議之同款或同等級的電池來更換。請依原廠指示處理廢電池。請依製造商說明書處理用過之電池。
- 如果更换不正确之电池行事会有爆炸的风险
  请依制造商说明书处理用过之电池

## Battery charge notice

It is important to consider temperature when the battery pack is charging. Charging is most efficient at normal room temperature or in a slightly cooler environment. It is essential that batteries are charged within the stated range of 0˚C to 40˚C. Charging batteries outside of the specified range could damage the batteries and shorten their life cycle.

**CAUTION!** Do not charge batteries at a temperature lower than 0˚C. This will and make the batteries unstable and dangerous. Please use a battery temperature detecting device for a charger to ensure a safe charging temperature range.

**CAUTION!** To ensure the unit working properly, please keep all connectors away from the contaminants staying inside of them such as dust, grease, mud, and water. The negligence may cause the unit with no communication, short circuited, overheated and so on.

**CAUTION!** If the connector is damaged, please ensure the connector is being fully repaired before use the unit to avoid causing short circuited.

© 2024 Unitech Electronics Co., Ltd. All rights reserved.
Unitech is a registered trademark of Unitech Electronics Co., Ltd.
All product and company names are trademarks, service marks, or registered trademarks of their respective owners

## Storage and safety notice

Although charged batteries may be left unused for several months, their capacity may be depleted due to build up of internal resistance. If this happens, they will require recharging prior to use. Batteries may be stored at temperatures between -20°C to 60°C, however they may deplete more rapidly at higher temperatures. It is recommended to store batteries at room temperature.

** The message above only applies to the usage of the removable batteries. For the products with non-removable batteries / without batteries, please refer to the specification of each product.*

## Product Operation and Storage Notice

The Unitech product has applicable operation and storage temperature conditions. Please follow the limitation of suggested temperature conditions to avoid failure, damage or malfunction.

**For applicable temperature conditions, please refer to the specification of each product.*

© 2024 Unitech Electronics Co., Ltd. All rights reserved.
Unitech is a registered trademark of Unitech Electronics Co., Ltd.
All product and company names are trademarks, service marks, or registered trademarks of their respective owners

# Adapter Notice

1. Please do not leave the power adapter in the socket when it is not connected to your Unitech product for charging.
2. Please remove the power adapter when the battery is fully recharged.
3. The bundled power adapter that comes with your Unitech product is not meant to be used outdoors. An adapter exposed to water or rain, or a very humid environment can cause damage to both the adapter and the product.
4. Please only use the bundled power adapter or same specification of adapter to charge your Unitech product. Using the wrong power adapter can damage your Unitech product.

** The message above only applies to the product connected to the adapter. For the products without using the adapters, please refer to the specification of each product.*

# Hearing Damage Warning

To prevent possible hearing damage, do not listen at high volume levels for long periods.

Figure 1 – Warning label (IEC 60417-6044)

© 2024 Unitech Electronics Co., Ltd. All rights reserved.
Unitech is a registered trademark of Unitech Electronics Co., Ltd.
All product and company names are trademarks, service marks, or registered trademarks of their respective owners

# Worldwide Support

Unitech's professional support team is available to quickly answer questions or assist with technical-related issues. Should an equipment problem occur, please contact the nearest Unitech regional service representative.
For complete contact information please visit the Web sites listed below:

| Taipei, Taiwan – Headquarters | Europe |
|---|---|
| **Tel:** +886-2-89121122<br>**E-mail:** info@hq.ute.com<br>**Address:** 5F, No. 136, Lane 235, Baoqiao Road, Xindian District, New Taipei City 231, Taiwan (R.O.C.)<br>**Website:** http://www.ute.com | **Tel:** +31-13-4609292<br>**E-mail:** info@eu.ute.com<br>**Address:** Kapitein Hatterasstraat 19, 5015 BB, Tilburg, the Netherlands<br>**Website:** http://eu.ute.com |
| **China** | **Japan** |
| **Tel:** +86-59-2310-9966<br>**E-mail:** info@cn.ute.com<br>**Address:** Room401C, 4F, RIHUA International Mansion, Xinfeng 3nd Road, Huoju Hi-tech District, Xiamen, Fujan , China<br>**Website:** http://cn.ute.com | **Tel:** +81-3-62310896<br>**E-mail:** info@jp.ute.com<br>**Address:** Tosei Building 3F.,18-10 Nihonbashi-Hakozakicho, Cyuouku, Tokyo, 103-0015, Japan<br>**Website:** http://jp.ute.com |
| **Asia & Pacific / Middle East** | **Latin America** |
| **Tel:** +886-2-27911556<br>**E-mail:** info@apac.ute.com<br>info@india.ute.com<br>info@mideast.ute.com<br>**Address:** 4F., No. 236, ShinHu 2nd Rd., NeiHu Chiu, 114, Taipei,Taiwan<br>**Website:** http://apac.ute.com / http://mideast.ute.com | **Tel:** +52-55-5171-0528<br>**E-mail:** info@latin.ute.com<br>**Address:** 17171 Park Row, Suite 210 Houston, TX 77084USA (Rep.)<br>**Website:** http://latin.ute.com |
| **North America** | **Please scan QR Code to visit us :** |
| **Tel:** +1-714-8926400<br>**E-mail:** info@us.ute.com / info@can.ute.com<br>**Address:** 6182 Katella Ave, Cypress, CA 90630, USA<br>**Website:** http://us.ute.com | |

© 2024 Unitech Electronics Co., Ltd. All rights reserved.
Unitech is a registered trademark of Unitech Electronics Co., Ltd.
All product and company names are trademarks, service marks, or registered trademarks of their respective owners

# Warranty Policy

The items covered under the Unitech Limited Warranty are free from defects during normal use.
The warranty period is varied from each country. Please consult with your supplier or Unitech local office for actual length of warranty period to your purchased product.

Warranty becomes void if equipment is modified, improperly installed or used, damaged by accident or neglect, or if any parts are improperly installed or replaced by the user.

© 2024 Unitech Electronics Co., Ltd. All rights reserved.
Unitech is a registered trademark of Unitech Electronics Co., Ltd.
All product and company names are trademarks, service marks, or registered trademarks of their respective owners

# Table of Contents

**Preface** ..... i
About This Manual ..... i
Regulatory Compliance Statements ..... i
Laser Information ..... vi
LED Information ..... vi
Battery Notice ..... vii
Adapter Notice ..... x
Hearing Damage Warning ..... x
Worldwide Support ..... xi
Warranty Policy ..... xii
**Chapter 1 - Overview** ..... 1
1.1 Package ..... 1
1.2 Product Detail ..... 2
1.3 Specifications ..... 3
1.4 Getting Start ..... 5
1.5 LED Indicator / Beeper Sequence ..... 6
**Chapter 2 - Installation** ..... 7
2.1 Barcode Programming ..... 7
2.2 RS-232 Interface ..... 8
2.3 Accepting RS-232 Command ..... 11
2.4 USB HID-KB
..... 11
2.5 USB Country Keyboard Types ..... 12
2.6 Convert Case ..... 15
2.7 USB COM Port Emulation ..... 15
2.8 Transmission speed ..... 15
2.9 Function Code Transmit ..... 16
2.10 Scan Mode ..... 16
2.11 Illumination Lights ..... 17
2.12 Illumination-Presentation ..... 18
2.13 Idle Illumination-Presentation ..... 18

© 2024 Unitech Electronics Co., Ltd. All rights reserved.
Unitech is a registered trademark of Unitech Electronics Co., Ltd.
All product and company names are trademarks, service marks, or registered trademarks of their respective owners

2.14 Beep & LED Notifications ..... 19
2.15 Good Read Delay ..... 21
2.16 Reread Delay ..... 22
2.17 Intercharactor Delay ..... 23
2.18 QR Code URL Link ..... 24
2.19 Transmit AIM Code ID Character ..... 24
**Chapter 3 – Symbology ..... 25**
3.1 Enable/Disable All Symbologies ..... 25
3.2 Code 128 ..... 25
3.3 EAN-8 ..... 27
3.4 EAN-13 ..... 30
3.5 UPC-E ..... 33
3.6 UPC-A ..... 37
3.7 Interleaved 2 of 5 ..... 40
3.8 Matrix 2 of 5 ..... 42
3.9 Industrial 2 of 5 ..... 43
3.10 Code 39 ..... 44
3.11 Codabar ..... 46
3.12 Code 93 ..... 48
3.13 GS1-128 ..... 49
3.14 GS1 Databar ..... 49
3.15 GS1 Limited ..... 50
3.16 GS1 Expanded ..... 50
3.17 MSI ..... 51
3.18 Code 11 ..... 52
3.19 Telepen ..... 52
3.20 PDF 417 ..... 53
3.21 QR Code ..... 55
3.22 QR Code URL Link ..... 56
3.23 Data Matrix ..... 57
3.24 Maxi Code ..... 58
3.25 Aztec Code ..... 59
3.26 Hanxin ..... 60
**Chapter 4 – Data Formatter ..... 61**
4.1 Data Terminator ..... 61
4.2 Add Prefix ..... 61

© 2024 Unitech Electronics Co., Ltd. All rights reserved.
Unitech is a registered trademark of Unitech Electronics Co., Ltd.
All product and company names are trademarks, service marks, or registered trademarks of their respective owners

4.3 Add Suffix ..... 62
4.4 Clear All Prefix and Suffix ..... 62
**Appendix A – Digit Barcodes ..... 63**
**Appendix B – AIM ID Table ..... 64**
**Appendix C – ASCII Table ..... 66**

© 2024 Unitech Electronics Co., Ltd. All rights reserved.
Unitech is a registered trademark of Unitech Electronics Co., Ltd.
All product and company names are trademarks, service marks, or registered trademarks of their respective owners

# Chapter 1 - Overview

## 1.1 Package

Please make sure the following contents are in the TS100 gift box.
If something is missing or damaged, please contact your Unitech representative.

### The standard package contents:

- RJ54 to USB Cable
- TS100 Scanner
- Quick Start Guide

*NOTE: **The barcode with an asterisk (*) which appears in the following chapters indicates that it is the default option for the corresponding setting.***



© 2024 Unitech Electronics Co., Ltd. All rights reserved.
Unitech is a registered trademark of Unitech Electronics Co., Ltd.
All product and company names are trademarks, service marks, or registered trademarks of their respective owners

# 1.2 Product Detail

- Scanner details

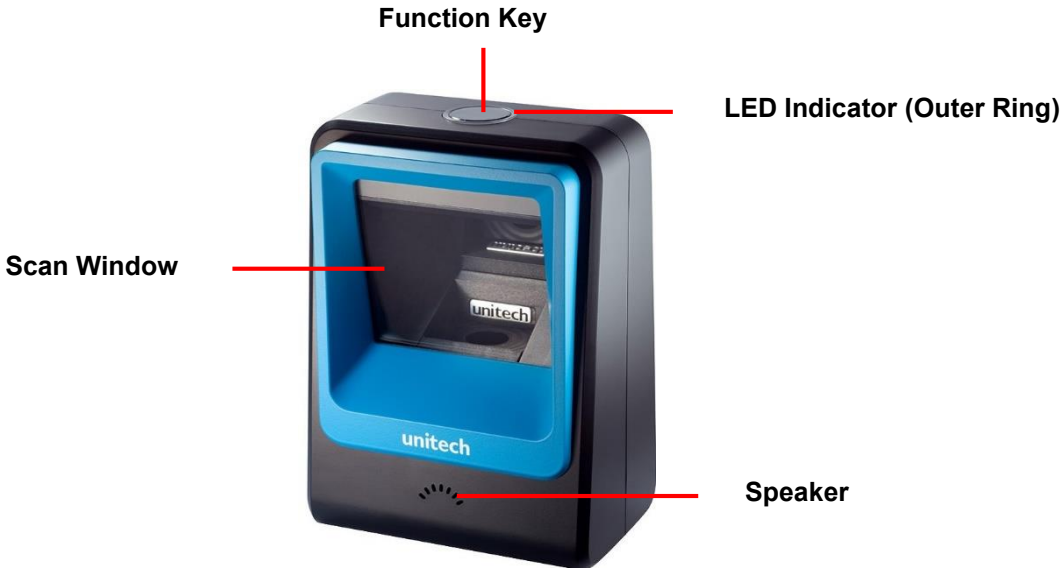

© 2024 Unitech Electronics Co., Ltd. All rights reserved.
Unitech is a registered trademark of Unitech Electronics Co., Ltd.
All product and company names are trademarks, service marks, or registered trademarks of their respective owners

# 1.3 Specifications

| Optical & Performance | |
|---|---|
| Sensor | Image Sensor with 1280x800 pixels |
| Illumination | 650nm RED LED |
| Scan Rate | 60 fps/s |
| Skew Angle | Horizontal Angle: 50°<br>Vertical Angle: 35° |
| Pitch Angle Sensor | ±65° |
| Roll Angle | 360° |
| Optical Resolution | 1D: 4 mil ; 2D: 6.7mil |
| Depth of Field | Code 39 (3.13 mil): 30 mm ~ 50 mm<br>Code 39 (5.13 mil): 20 mm ~ 115 mm<br>PDF (6.88 mil): 0 mm ~ 160 mm<br>UPC-A (13 mil): 10 mm ~ 180 mm<br>QR (20 mil): 0 mm ~230 mm |
| **Communication** | |
| Host Interface supported | USB, RS232 |
| **Mechanical** | |
| Dimension | 105mm x 146mm x 70mm |
| Weight | 345g (without cable) |
| **Functionality** | |
| Operation Mode | Trigger Mode, Presentation Mode, Buffer Mode |
| **Regulatory Approvals** | |
| CE, FCC, BSMI | |
| **Symbologies** | |



© 2024 Unitech Electronics Co., Ltd. All rights reserved.
Unitech is a registered trademark of Unitech Electronics Co., Ltd.
All product and company names are trademarks, service marks, or registered trademarks of their respective owners

| | |
|---|---|
| 1D | UPC-A/E, EAN-8/13, UPC/EAN Supplementals, EAN-8 Extend, Code 128, Code 39, Code 93, Code 11, Interleaved 2 of 5, Matrix 2 of 5, Codabar, MSI Plessey, GS1 DataBar, China Postal, Korean Postal, etc |
| 2D | PDF417, Micro PDF417, QR Code, Micro QR, Data Matrix, Aztec Code |
| Data Formatting | PDF417, MicroPDF417, DataMatrix, DataMatrix-Inverse, Maxicode, QRcode, MicroQR, Aztec, Aztec Inverse, Han Xin, Han Xin Inverse |
| **Electrical** | |
| Operation Voltage | DC 5V |
| Current Consumption | 500 mA |
| **Environmental** | |
| ESD Protection | +/-15kv air discharge |
| Mechanical Shock | 1M |
| Operating Temperature | 0°C to 50°C |
| Storage Temperature | -40°C to 70°C |
| Relative Humidity | 0% ~ 95%RH (Non-condensing) |
| **Package Contents** | |
| TS100 with USB Cable, QSG | |



© 2024 Unitech Electronics Co., Ltd. All rights reserved.
Unitech is a registered trademark of Unitech Electronics Co., Ltd.
All product and company names are trademarks, service marks, or registered trademarks of their respective owners

# 1.4 Getting Start

To use the TS100, please connect USB cable to the USB port of a host PC.

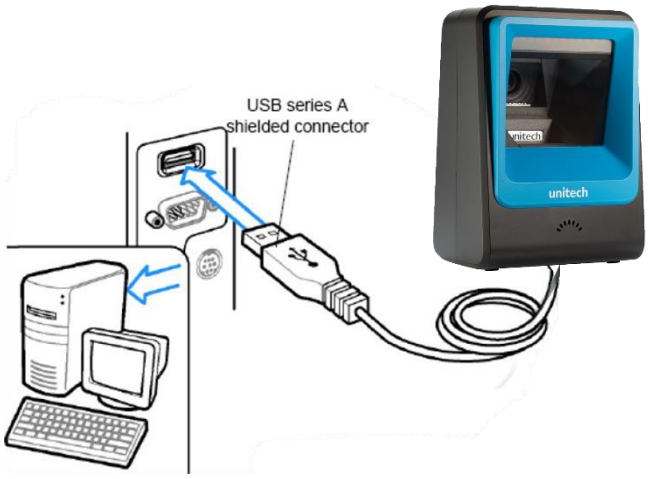


## 1.4.1 Horizontal Installation

Install the Angle Stand upward

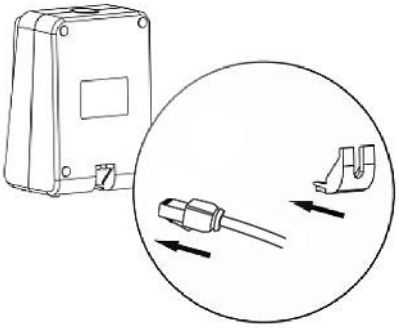

Place the Scanner Horizontally

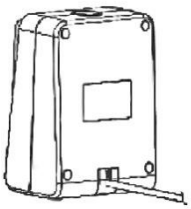

## 1.4.2 Pitch Forward Installation

Install the Angle Stand downward

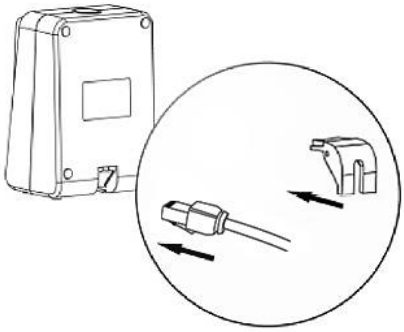

Pitch forward 15 degree

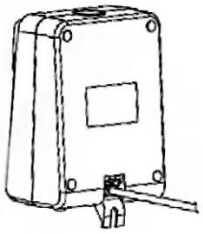



© 2024 Unitech Electronics Co., Ltd. All rights reserved.
Unitech is a registered trademark of Unitech Electronics Co., Ltd.
All product and company names are trademarks, service marks, or registered trademarks of their respective owners

# 1.5 LED Indicator / Beeper Sequence

## 1.5.1 LED Indicator

Pressing on function button allows user to quickly switch between 2 reading modes: Normal Scan and 1D Barcode Quick Scan.

| Operation Mode | LED Indication | Description |
|---|---|---|
| **Normal Scan** | Blue Light | Support printed barcode and barcodes on the screen. |
| **1D Barcode Quick Scan** | Yellow Light | Support 1D symbology, and can continuously scan barcodes on the products quickly. It is often applied in checkout at the cashier, but does not support scanning barcodes on the screen. |

***Note:*** The latest firmware releases have improved the ability of Normal Scan Operation Mode so much that there is no longer a speed advantage to 1D Barcode Quick Scan Operation Mode. But, if you ever have a need to make a custom mode, a “Yellow Light” mode, please ask Unitech for custom firmware. Contact us through the link: https://www.ute.com/en/contact

| LED Indication | Description |
|---|---|
| **A Green light then a Blue light** | **Switch On** |
| **Blue light Always On** | **Scanner Ready** |
| **Green light flash once** | **Configuration Commands Good Read Barcode Good Read** |
| **Red light flash once** | **Configuration Commands Error** |

## 1.5.2 Beeper Sequence

| Beeper | Description |
|---|---|
| **One long beep** | **Switch on** |
| **One long & low beep** | **Configuration Commands Error** |
| **One short & low beep** | **Configuration Commands Good Read** |
| **One short & high beep** | **Barcode Good Read** |



© 2024 Unitech Electronics Co., Ltd. All rights reserved.
Unitech is a registered trademark of Unitech Electronics Co., Ltd.
All product and company names are trademarks, service marks, or registered trademarks of their respective owners

# Chapter 2 - Installation

## 2.1 Barcode Programming

### 2.1.1 Introduction

The TS100 2D Barcoder Reader provides a RS-232 interface and a USB interface to communicate with the host device. The host device can receive scanned data and send commands to control the engine or to access/alter the configuration information of the engine via the RS-232 or USB interface.

### 2.1.2 Factory Defaults

Scan the following barcode to restore the engine to the factory defaults.
***Note:*** Use this feature with discretion.

**Restore the Factory Defaults**

### 2.1.3 Display Version

Scanning the barcode below can display the firmware version number.

**Software Version**



© 2024 Unitech Electronics Co., Ltd. All rights reserved.
Unitech is a registered trademark of Unitech Electronics Co., Ltd.
All product and company names are trademarks, service marks, or registered trademarks of their respective owners

# 2.2 RS-232 Interface

RS-232 works on a plug and play basis.
If you change the USB cable, it can be used as a USB device.
The same goes for the RS-232 Interface. If you want to use the interface, connect with the RS-232 cable,

Serial communication interface is usually used when connecting the engine to a host device (like PC, POS). However, to ensure smooth communication and accuracy of data, you need to set communication parameters (including baud rate, parity check, data bit and stop bit) to match the host device.
The serial communication interface provided by the engine is based on RS-level signals.
Default serial communication parameters are listed below. Make sure all parameters match the host requirements.

| Parameter | Factory Default |
|---|---|
| Serial Communication | Standard RS-232 |
| Baud Rate | 115200 |
| Parity Check | None |
| Data Bits | 8 |
| Stop Bits | 1 |
| Hardware Flow Control | None |

***Note***: TS100 scanners support Auto-Cable function which can be switched 232 interface automatically when connecting with 232 cable.



© 2024 Unitech Electronics Co., Ltd. All rights reserved.
Unitech is a registered trademark of Unitech Electronics Co., Ltd.
All product and company names are trademarks, service marks, or registered trademarks of their respective owners

## 2.2.1 Baud Rate

Baud rate is the number of bits of data transmitted per second. Set the baud rate to match the Host requirements.

**115200 ***

**2400**

**4800**

**9600**

**19200**

**38400**

**57600**



© 2024 Unitech Electronics Co., Ltd. All rights reserved.
Unitech is a registered trademark of Unitech Electronics Co., Ltd.
All product and company names are trademarks, service marks, or registered trademarks of their respective owners

## 2.2.2 Data Bit & Parity Check & Stop Bit

**None Parity /8 Data Bits**
**/1 Stop Bit ***

**Even Parity /7 Data Bits**
**/1 Stop Bit**

**Odd Parity /7 Data Bits**
**/1 Stop Bit**

## 2.2.3 XON/XOFF

The scanner stops sending data when the host sends the XOFF character (hex 13) to it.
To resume transmission, the host sends the XON character (hex 11)

**XON/XOFF Disable ***

**XON/XOFF Enable**



© 2024 Unitech Electronics Co., Ltd. All rights reserved.
Unitech is a registered trademark of Unitech Electronics Co., Ltd.
All product and company names are trademarks, service marks, or registered trademarks of their respective owners

# 2.3 Accepting RS-232 Command

**Disable ***

**Enable**

| Commands | ASCII | HEX |
|---|---|---|
| Disable Scanner | D | 0x44 |
| Enable Scanner | E | 0x45 |

For the TS100 scanner, it can accept serial host commands. If you wish to enable/disable scanner by using commands, scan the enable barcode. Host commands for other interfaces are also available.

# 2.4 USB HID-KB

When you connect the engine to the Host via a USB connection, you can enable the USB HID-KB feature by scanning the barcode below. Then engine's transmission will be simulated as USB keyboard input. The Host receives keystrokes on the virtual keyboard. It works on a Plug and Play basis and no driver is required.

**USB HD-KB**



© 2024 Unitech Electronics Co., Ltd. All rights reserved.
Unitech is a registered trademark of Unitech Electronics Co., Ltd.
All product and company names are trademarks, service marks, or registered trademarks of their respective owners

# 2.5 USB Country Keyboard Types

Keyboard layouts vary from country to country. The default setting is 1-U.S. keyboard.

**1 – U.S. ***

**2 – UK**

**3 – Denmark**

**4 – France**

**5 – Finland**

**6 – Turkey_F**

**7 – Italy**

**8 – Norway**



© 2024 Unitech Electronics Co., Ltd. All rights reserved.
Unitech is a registered trademark of Unitech Electronics Co., Ltd.
All product and company names are trademarks, service marks, or registered trademarks of their respective owners

**9 – Albania**

**10 – Belgium**

**11 – Bosnia**

**12 – Brazil**

**13 – Croatia**

**14 – Czech**

**15 – Dutch**

**16 – Estonia**

**17 – Germany**

**18 – Greek**



© 2024 Unitech Electronics Co., Ltd. All rights reserved.
Unitech is a registered trademark of Unitech Electronics Co., Ltd.
All product and company names are trademarks, service marks, or registered trademarks of their respective owners

**19 – Hungary**

**20 – Irish**

**21 – Latvia**

**22 – Lithuania**

**23 – Macedonia**

**24 – Spain**

**25 – Poland**

**26 – Portugal**

**27 – Romania**

**28 – Russia**

**29 – Japan**



© 2024 Unitech Electronics Co., Ltd. All rights reserved.
Unitech is a registered trademark of Unitech Electronics Co., Ltd.
All product and company names are trademarks, service marks, or registered trademarks of their respective owners

# 2.6 Convert Case

**No Case Conversion ***

**Convert All to Upper Case**

**Convert All to Lower Case**

**Example**: When the Convert All to Lower Case feature is enabled, barcode data "AbC" is transmitted as "abc".

# 2.7 USB COM Port Emulation

**USB COM Port Emulation**

# 2.8 Transmission speed

If the terminal drops characters, change the speed to low.

**High**

**Low ***



© 2024 Unitech Electronics Co., Ltd. All rights reserved.
Unitech is a registered trademark of Unitech Electronics Co., Ltd.
All product and company names are trademarks, service marks, or registered trademarks of their respective owners

# 2.9 Function Code Transmit

All ASCII control characters are translated into CTRL+ASCII functions if you enable Function Code Transmit.
Otherwise, they are translated into predefined keystrokes.
Refer to Appendix C: ASCII Table for hexadecimal values of characters.

**Ctrl+ASCII Functions Disable ***

**Ctrl+ASCII Functions Enable**

# 2.10 Scan Mode

## 2.10.1 Trigger Mode

If the Trigger Mode is enabled, you can activate the scanner by providing an external hardware trigger, or using a serial trigger command. When in manual trigger mode, the scanner scans until a barcode is read, or until the hardware trigger is released. When in serial mode, the scanner scans until a barcode has been read or until the deactivate command is sent.

**Manual Trigger Mode**

### Serial Trigger Command:

| | |
|---|---|
| Command Trigger: | [0x02][0xF4][0x03] |
| Command Untrigger: | [0x02][0xF5][0x03] |



© 2024 Unitech Electronics Co., Ltd. All rights reserved.
Unitech is a registered trademark of Unitech Electronics Co., Ltd.
All product and company names are trademarks, service marks, or registered trademarks of their respective owners

## 2.10.2 Presentation Mode

**Presentation Mode (Normal)**

**Presentation Mode (Continue Scan)**

## 2.10.3 Read Mode

**Printed-Reading Mode ***

**Screen-Reading Mode**

Note: We suggest using Screen-Reading Mode when scanning barcodes on the screen.

# 2.11 Illumination Lights

**On ***

**Off**



© 2024 Unitech Electronics Co., Ltd. All rights reserved.
Unitech is a registered trademark of Unitech Electronics Co., Ltd.
All product and company names are trademarks, service marks, or registered trademarks of their respective owners

## 2.12 Illumination-Presentation

High *

Low

## 2.13 Idle Illumination-Presentation

High

Low *



© 2024 Unitech Electronics Co., Ltd. All rights reserved.
Unitech is a registered trademark of Unitech Electronics Co., Ltd.
All product and company names are trademarks, service marks, or registered trademarks of their respective owners

# 2.14 Beep & LED Notifications

## 2.14.1 LED Idle State-Presentation

This sets LED behavior when the scanner is idle.

**Leds Off ***

**Leds On**

## 2.14.2 Power On Beep

**On ***

**Off**

## 2.14.3 Good Read Indicator

**On ***

**Off**



© 2024 Unitech Electronics Co., Ltd. All rights reserved.
Unitech is a registered trademark of Unitech Electronics Co., Ltd.
All product and company names are trademarks, service marks, or registered trademarks of their respective owners

## 2.14.4 Beeper Control

**High ***

**Medium**

**Low**

## 2.14.5 Good Read Beeper Duration

**Normal ***

**Short**



© 2024 Unitech Electronics Co., Ltd. All rights reserved.
Unitech is a registered trademark of Unitech Electronics Co., Ltd.
All product and company names are trademarks, service marks, or registered trademarks of their respective owners

### 2.14.6 Good Read Beeper Tone

**Medium High Frequency ***

**Medium Frequency**

**Low Frequency**

**High Frequency**

## 2.15 Good Read Delay

This sets a re-read delay time between decodes of different symbols.

**No Delay ***

**Delay 500 MS**

**Delay 2000 MS**



© 2024 Unitech Electronics Co., Ltd. All rights reserved.
Unitech is a registered trademark of Unitech Electronics Co., Ltd.
All product and company names are trademarks, service marks, or registered trademarks of their respective owners

# 2.16 Reread Delay

This sets a re-read delay time between decodes of the same symbol.

**Delay 500 MS ***

**Delay 750 MS**

**Delay 1000 MS**



© 2024 Unitech Electronics Co., Ltd. All rights reserved.
Unitech is a registered trademark of Unitech Electronics Co., Ltd.
All product and company names are trademarks, service marks, or registered trademarks of their respective owners

# 2.17 Intercharactor Delay

5ms

10ms

25ms

50ms



© 2024 Unitech Electronics Co., Ltd. All rights reserved.
Unitech is a registered trademark of Unitech Electronics Co., Ltd.
All product and company names are trademarks, service marks, or registered trademarks of their respective owners

# 2.18 QR Code URL Link

**Enable**

**Disable ***

# 2.19 Transmit AIM Code ID Character

**Enable**

**Disable**



© 2024 Unitech Electronics Co., Ltd. All rights reserved.
Unitech is a registered trademark of Unitech Electronics Co., Ltd.
All product and company names are trademarks, service marks, or registered trademarks of their respective owners

# Chapter 3 – Symbology

## 3.1 Enable/Disable All Symbologies

If the **Disable All Symbologies** feature is enabled, the engine will not be able to read any non-programming barcodes  except the programming barcodes.

**Enable All Symbologies**

**Disable All Symbologies**

## 3.2 Code 128

### 3.2.1 Enable/Disable Code 128

**Enable Code 128 ***

**Disable Code 128**



© 2024 Unitech Electronics Co., Ltd. All rights reserved.
Unitech is a registered trademark of Unitech Electronics Co., Ltd.
All product and company names are trademarks, service marks, or registered trademarks of their respective owners

## 3.2.2 Set Length Range for Code 128

The length of Code 128 can be set to the maximum value or minimum value. The value between the maximum and the minimum is valid.
Code 128 max length command: 020A03. The parameter of this command can be set from min to 90.
Code 128 min length command: 020A02. The parameter of this command can be set from 0 to max.

**Set the Maximum Length**

**Set the Minimum Length**

**Example**: Follow the steps bellow to set the barcode length of the minimum value 10 and the maximum value 25:

1. Scan the Set the Maximum Length barcode.
2. Scan the numeric barcodes ”2” and ”5” in Appendix A.
3. Scan the Set the Minimum Length barcode.
4. Scan the numeric barcodes ”1” and ”0” in Appendix A.



© 2024 Unitech Electronics Co., Ltd. All rights reserved.
Unitech is a registered trademark of Unitech Electronics Co., Ltd.
All product and company names are trademarks, service marks, or registered trademarks of their respective owners

# 3.3 EAN-8

## 3.3.1 Enable/Disable EAN-8

**Enable EAN-8 ***

**Disable EAN-8**

## 3.3.2 Transmit Check Digit

EAN-8 is 8 digits in length with the last one as its check digit used to verify the accuracy of the data.

**Transmit EAN-8 Check Digit ***

**Do Not Transmit EAN-8 Check Digit**



© 2024 Unitech Electronics Co., Ltd. All rights reserved.
Unitech is a registered trademark of Unitech Electronics Co., Ltd.
All product and company names are trademarks, service marks, or registered trademarks of their respective owners

### 3.3.3 2-Digit Add-On Code

An EAN-8 barcode can be augmented with a two-digit or five-digit add-on code to form a new one. In the examples below, the part surrounded by blue dotted line is an EAN-8 barcode while the part circled by red dotted line is an add-on code.

**Enable 2-Digit Add-On Code**

**Disable 2-Digit Add-On Code ***

### 3.3.4 5-Digit Add-On Code

**Enable 5-Digit Add-On Code**

**Disable 5-Digit Add-On Code ***



© 2024 Unitech Electronics Co., Ltd. All rights reserved.
Unitech is a registered trademark of Unitech Electronics Co., Ltd.
All product and company names are trademarks, service marks, or registered trademarks of their respective owners

## 3.3.5 Add-On Code Required

**EAN-8 Add-On Code Required**

**EAN-8 Add-On Code Not Required ***

## 3.3.6 ENA/JAN-8 Addenda Separator

When this feature is enabled, there is a space between barcode and addenda. When this feature is disabled, there is no space.

**Enable ENA/JAN-8 Addenda Separator ***

**Disable ENA/JAN-8 Addenda Separator UPC**



© 2024 Unitech Electronics Co., Ltd. All rights reserved.
Unitech is a registered trademark of Unitech Electronics Co., Ltd.
All product and company names are trademarks, service marks, or registered trademarks of their respective owners

# 3.4 EAN-13

## 3.4.1 Enable/Disable EAN-13

**Enable EAN-13 ***

**Disable EAN-13**

## 3.4.2 Transmit Check Digit

**Transmit EAN-13 Check Digit ***

**Do Not Transmit EAN-13 Check Digit**



© 2024 Unitech Electronics Co., Ltd. All rights reserved.
Unitech is a registered trademark of Unitech Electronics Co., Ltd.
All product and company names are trademarks, service marks, or registered trademarks of their respective owners

### 3.4.3 2-Digit Add-On Code

**Enable 2-Digit Add-On Code**

**Disable 2-Digit Add-On Code ***

### 3.4.4 5-Digit Add-On Code

**Enable 5-Digit Add-On Code**

**Disable 5-Digit Add-On Code ***

### 3.4.5 Add-On Code Required

**EAN-13 Add-On Code Required**

**EAN-13 Add-On Code Not Required ***



© 2024 Unitech Electronics Co., Ltd. All rights reserved.
Unitech is a registered trademark of Unitech Electronics Co., Ltd.
All product and company names are trademarks, service marks, or registered trademarks of their respective owners

## 3.4.6 EAN/JAN-13 Addenda Separator

When this feature is enabled, there is a space between barcode and addenda. When this feature is disabled, there is no space.

**Enable ENA/JAN-13 Addenda Separator**

**Disable ENA/JAN 13 Addenda Separator ***

## 3.4.7 ISBN Translate

When you scan the Enable ISBN Translate, EAN-13 Bookland symbols are translated into their equivalent ISBN number format.

**Enable ISBN Translate**

**Disable ISBN Translate ***



© 2024 Unitech Electronics Co., Ltd. All rights reserved.
Unitech is a registered trademark of Unitech Electronics Co., Ltd.
All product and company names are trademarks, service marks, or registered trademarks of their respective owners

# 3.5 UPC-E

## 3.5.1 Enable/Disable UPC-E0/E1

**Enable UPC-E0 ***

**Disable UPC-E0**

**Enable UPC-E1**

**Disable UPC-E1 ***

## 3.5.2 UPC-E0 Check Digit

**Enable UPC-E0 Check Digit ***

**Disable UPC-E0 Check Digit**



© 2024 Unitech Electronics Co., Ltd. All rights reserved.
Unitech is a registered trademark of Unitech Electronics Co., Ltd.
All product and company names are trademarks, service marks, or registered trademarks of their respective owners

### 3.5.3 UPC-E0 Expand

UPC-E0 expand expands the UPC-E code to the 12 digits UPC-A format.

**Enable UPC-E0 Expand**

**Disable UPC-E0 Expand ***

### 3.5.4 UPC-E0 Addenda Required

When the Enable UPC-E0 required is scanned, the scanner will only read UPC-E barcodes that have addenda.

**Enable UPC-E0 Required**

**Disable UPC-E0 Required ***



© 2024 Unitech Electronics Co., Ltd. All rights reserved.
Unitech is a registered trademark of Unitech Electronics Co., Ltd.
All product and company names are trademarks, service marks, or registered trademarks of their respective owners

### 3.5.5 UPC-E0 Addenda Separator

**Enable UPC-E0 Separator ***

**Disable UPC-E0 Separator**

### 3.5.6 UPC-E0 Number System

The number system digit of UPC symbol is normally transmitted at the beginning of the scanned data, but the unit can be programmed so it will be not transmitted.

**Enable UPC-E0 Number System ***

**Disable UPC-E0 Number System**



© 2024 Unitech Electronics Co., Ltd. All rights reserved.
Unitech is a registered trademark of Unitech Electronics Co., Ltd.
All product and company names are trademarks, service marks, or registered trademarks of their respective owners

## 3.5.7 UPC-E0 Addenda

**Enable 2-Digit Addenda**

**Disable 2 Digit Addenda ***

**Enable 5-Digit Addenda**

**Disable 5 Digit Addenda ***



© 2024 Unitech Electronics Co., Ltd. All rights reserved.
Unitech is a registered trademark of Unitech Electronics Co., Ltd.
All product and company names are trademarks, service marks, or registered trademarks of their respective owners

# 3.6 UPC-A

## 3.6.1 Enable/Disable UPC-A

**Enable UPC-A ***

**Disable UPC-A**

## 3.6.2 UPC-A Check Digit

**Enable UPC-A Check Digit ***

**Disable UPC-A Check Digit**

## 3.6.3 UPC-A Addenda Required

When Enable UPC-A required is scanned, the scanner will only read UPC-E barcodes that have addenda.

**Enable UPC-A Required**

**Disable UPC-A Required***



© 2024 Unitech Electronics Co., Ltd. All rights reserved.
Unitech is a registered trademark of Unitech Electronics Co., Ltd.
All product and company names are trademarks, service marks, or registered trademarks of their respective owners

### 3.6.4 UPC-A Addenda Separator

**Enable UPC-A Separator ***

**Disable UPC-A Separator**

### 3.6.5 UPC-A Number System

The number system digit of UPC symbol is normally transmitted at the beginning of the scanned data, but the unit can be programmed so it will not be transmitted.

**Enable UPC-A Number System ***

**Disable UPC-A Number System**



© 2024 Unitech Electronics Co., Ltd. All rights reserved.
Unitech is a registered trademark of Unitech Electronics Co., Ltd.
All product and company names are trademarks, service marks, or registered trademarks of their respective owners

## 3.6.6 UPC-A Addenda

**Enable 2 Digit Addenda**

**Disable 2 Digit Addenda ***

**Enable 5 Digit Addenda**

**Disable 5 Digit Addenda ***



© 2024 Unitech Electronics Co., Ltd. All rights reserved.
Unitech is a registered trademark of Unitech Electronics Co., Ltd.
All product and company names are trademarks, service marks, or registered trademarks of their respective owners

# 3.7 Interleaved 2 of 5

## 3.7.1 Enable/Disable Interleaved 2 of 5

**Enable Interleaved 2 of 5 ***

**Disable Interleaved 2 of 5**

## 3.7.2 Set Length Range for Interleaved 2 of 5

The length of Interleaved 2 of 5 can be set to the maximum value or minimum value. The value between the maximum and the minimum is valid.
Interleaved 2 of 5 max length command: 020404. The parameter of this command can be set from min to 80.
Interleaved 2 of 5 min length command: 020403. The parameter of this command can be set from 2 to max.

**Set the Minimum Length**

**Set the Maximum Length**

**Example:** Set the Barcode length of the minimum value 10, and the maximum value 25:

1. Scan the **Set the Maximum Length** barcode.
2. Scan the numeric barcodes "2" and "5" in Appendix A
3. Scan the **Set the Minimum Length** barcode.
4. Scan the numeric barcodes"1"and"0"in Appendix A.



© 2024 Unitech Electronics Co., Ltd. All rights reserved.
Unitech is a registered trademark of Unitech Electronics Co., Ltd.
All product and company names are trademarks, service marks, or registered trademarks of their respective owners

## 3.7.3 Interleaved 2 of 5 Check Digit

**Disable ***

**Transmit Check Character After Verification**

**Do Not Transmit Check Character After Verification**

## 3.7.4 Febraban Decode

**On***

**Off**



© 2024 Unitech Electronics Co., Ltd. All rights reserved.
Unitech is a registered trademark of Unitech Electronics Co., Ltd.
All product and company names are trademarks, service marks, or registered trademarks of their respective owners

# 3.8 Matrix 2 of 5

## 3.8.1 Enable/Disable Matrix 2 of 5

**Enable Matrix 2 of 5**

**Disable Matrix 2 of 5 ***

## 3.8.2 Set Length Range for Matrix 2 of 5

The length of Matrix 2 of 5 can be set to the maximum value or minimum value. The value between the maximum and the minimum is valid.
Matrix 2 of 5 max length command: 020803. The parameter of this command can be set from min to 80.
Matrix 2 of 5min length command: 020802. The parameter of this command can be set from 1 to max.

**Set the Maximum Length**

**Set the Minimum Length**

**Example:** Set the Barcode length of the minimum value 10, and the maximum value 25:

1. Scan the **Set the Maximum Length** barcode.
2. Scan the numeric barcodes ”2” and ”5” in Appendix A.
3. Scan the **Set the Minimum Length** barcode.
4. Scan the numeric barcodes ”1” and ”0” in Appendix A.



© 2024 Unitech Electronics Co., Ltd. All rights reserved.
Unitech is a registered trademark of Unitech Electronics Co., Ltd.
All product and company names are trademarks, service marks, or registered trademarks of their respective owners

# 3.9 Industrial 2 of 5

## 3.9.1 Enable/Disable Industrial 2 of 5

**Enable Industrial 2 of 5**

**Disable Industrial 2 of 5 ***

## 3.9.2 Set Length Range for Industrial 2 of 5

The barcode length can be set to the maximum value or minimum value. The value between the maximum and the minimum is valid.
Industrial 2 of 5 max length command: 020603. The parameter of this command can be set from min to 80.
Industrial 2 of 5 min length command: 020602. The parameter of this command can be set from 1 to max.

**Set the Maximum Length**

**Set the Minimum Length**

**Example:** Set the Barcode length of the minimum value 10, and the maximum value 25:

1. Scan the **Set the Maximum Length** barcode.
2. Scan the numeric barcodes ”2” and ”5” in Appendix A.
3. Scan the **Set the Minimum Length** barcode.
4. Scan the numeric barcodes ”1” and ”0” in Appendix A.



© 2024 Unitech Electronics Co., Ltd. All rights reserved.
Unitech is a registered trademark of Unitech Electronics Co., Ltd.
All product and company names are trademarks, service marks, or registered trademarks of their respective owners

# 3.10 Code 39

## 3.10.1 Enable/Disable Code 39

**Enable Code 39 ***

**Disable Code 39**

## 3.10.2 Set Length Range for Code 39

The Code 39 barcode length can be set to the maximum value or minimum value. The value between the maximum and the minimum is valid.
Code 39 max length command: 020308. The parameter of this command can be set from min to 48.
Code 39 min length command: 020307. The parameter of this command can be set from 1 to max.

**Set the Maximum Length**

**Set the Minimum Length**

**Example:** Set the Barcode length of the minimum value 10, and the maximum value 25:

1. Scan the Set the Maximum Length barcode.
2. Scan the numeric barcodes ”2” and ”5” in Appendix A .
3. Scan the Set the Minimum Length barcode.
4. Scan the numeric barcodes ”1” and ”0” in Appendix A .



© 2024 Unitech Electronics Co., Ltd. All rights reserved.
Unitech is a registered trademark of Unitech Electronics Co., Ltd.
All product and company names are trademarks, service marks, or registered trademarks of their respective owners

### 3.10.3 Check Character Verification

**Disable ***

**Do Not Transmit Check Character After Verification**

**Transmit Check Character After Verification**

### 3.10.4 Transmit Start/Stop Character

**Transmit Start/Stop Character**

**Do Not Transmit Start/Stop Character ***

### 3.10.5 Enable/Disable Code 39 Full ASCII

**Enable Code 39 Full ASCII**

**Disable Code 39 Full ASCII ***



© 2024 Unitech Electronics Co., Ltd. All rights reserved.
Unitech is a registered trademark of Unitech Electronics Co., Ltd.
All product and company names are trademarks, service marks, or registered trademarks of their respective owners

# 3.11 Codabar

## 3.11.1 Enable/Disable Codabar

**Enable Codabar**

**Disable Codabar ***

## 3.11.2 Set Length Range for Codabar

Barcode length can be set to the maximum value or minimum value. The value between the maximum and the minimum is valid.
Codabar max length command: 020206. The parameter of this command can be set from min to 60.
Codabar min length command: 020205. The parameter of this command can be set from 2 to max.

**Set the Minimum Length**

**Set the Maximum Length**

**Example:** Set the Barcode length of the minimum value 10, and the maximum value 25:

1. Scan the **Set the Maximum Length** barcode.
2. Scan the numeric barcodes "2" and "5" in Appendix A .
3. Scan the **Set the Minimum Length** barcode.
4. Scan the numeric barcodes "1" and "0" in Appendix A .



© 2024 Unitech Electronics Co., Ltd. All rights reserved.
Unitech is a registered trademark of Unitech Electronics Co., Ltd.
All product and company names are trademarks, service marks, or registered trademarks of their respective owners

## 3.11.3 Check Character Verification

**Disable ***

**Do Not Transmit Check Character After Verification**

**Transmit Check Character After Verification**

## 3.11.4 Transmit Start/Stop Character

**Transmit Start/Stop Character**

**Do Not Transmit Start/Stop Character ***



© 2024 Unitech Electronics Co., Ltd. All rights reserved.
Unitech is a registered trademark of Unitech Electronics Co., Ltd.
All product and company names are trademarks, service marks, or registered trademarks of their respective owners

# 3.12 Code 93

## 3.12.1 Enable/Disable Code 93

**Enable Code 93 ***

**Disable Code 93**

## 3.12.2 Set Length Range for Code 93

Barcode length can be set to the maximum valueor minimum value. The value between the maximum and the minimum is valid.
Code 93 max length command:020D03. The parameter of this command can be set from min to 80.
Code 93 min length command: 020D02. The parameter of this command can be set from 1 to max.

**Set the Maximum Length**

**Set the Minimum Length**

**Example:** Set the Barcode length of the minimum value 10, and the maximum value 25:

1. Scan the **Set the Maximum Length** barcode.
2. Scan the numeric barcodes ”2” and ”5” in Appendix A.
3. Scan the **Set the Minimum Length** barcode.
4. Scan the numeric barcodes ”1” and ”0” in Appendix A.



© 2024 Unitech Electronics Co., Ltd. All rights reserved.
Unitech is a registered trademark of Unitech Electronics Co., Ltd.
All product and company names are trademarks, service marks, or registered trademarks of their respective owners

# 3.13 GS1-128

## 3.13.1 Enable/Disable GS1-128

**Enable GS1-128 ***

**Disable GS1-128**

# 3.14 GS1 Databar

## 3.14.1 Enable/Disable GS1 Databar

**Enable GS1 Databar**

**Disable GS1 Databar ***



© 2024 Unitech Electronics Co., Ltd. All rights reserved.
Unitech is a registered trademark of Unitech Electronics Co., Ltd.
All product and company names are trademarks, service marks, or registered trademarks of their respective owners

# 3.15 GS1 Limited

## 3.15.1 Enable/Disable GS1 Limited

**Enable GS1 Limited**

**Disable GS1 Limited ***

# 3.16 GS1 Expanded

## 3.16.1 Enable/Disable GS1 Expanded

**Enable GS1 Expanded**

**Disable GS1 Expanded ***



© 2024 Unitech Electronics Co., Ltd. All rights reserved.
Unitech is a registered trademark of Unitech Electronics Co., Ltd.
All product and company names are trademarks, service marks, or registered trademarks of their respective owners

# 3.17 MSI

## 3.17.1 Enable/Disable MSI

**Enable MSI**

**Disable MSI ***

## 3.17.2 Set Length Range for MSI

Barcode length can be set to the maximum value or minimum value. The value between the maximum and the minimum is valid.

MSI max length command: 020E04. The parameter of this command can be set from min to 48.

MSI min length command: 020E03. The parameter of this command can be set from 4 to max.

**Set the Maximum Length**

**Set the Minimum Length**

**Example:** Set the Barcode length of the minimum value 10 and the maximum value 25:

1. Scan the **Set the Maximum Length** barcode.
2. Scan the numeric barcodes ”2” and ”5” in Appendix A .
3. Scan the **Set the Minimum Length** barcode.
4. Scan the numeric barcodes ”1” and ”0” in Appendix A .



© 2024 Unitech Electronics Co., Ltd. All rights reserved.
Unitech is a registered trademark of Unitech Electronics Co., Ltd.
All product and company names are trademarks, service marks, or registered trademarks of their respective owners

# 3.18 Code 11

## 3.18.1 Enable/Disable Code 11

**Enable Code 11**

**Disable Code 11 ***

## 3.18.2 Code 11 Check Digit

**One Check Digit**

**Two Check Digits ***

# 3.19 Telepen

## 3.19.1 Enable/Disable Telepen

**Enable China Telepen**

**Disable China Telepen ***



© 2024 Unitech Electronics Co., Ltd. All rights reserved.
Unitech is a registered trademark of Unitech Electronics Co., Ltd.
All product and company names are trademarks, service marks, or registered trademarks of their respective owners

# 3.20 PDF 417

## 3.20.1 Enable/Disable PDF 417

**Enable PDF 417 ***

**Disable PDF 417**

## 3.20.2 Enable/Disable Micro PDF 417

**Enable Micro PDF 417**

**Disable Micro PDF 417 ***

## 3.20.3 Set Length Range for PDF 417

Barcode length can be set to the maximum value or minimum value. The value between the maximum and the minimum is valid.
PDF 417 max length command: 021F06. The parameter of this command can be set from min to 2750.
PDF 417 min length command: 021F05. The parameter of this command can be set from 1 to max.

**Set the Maximum Length**

**Set the Minimum Length**



© 2024 Unitech Electronics Co., Ltd. All rights reserved.
Unitech is a registered trademark of Unitech Electronics Co., Ltd.
All product and company names are trademarks, service marks, or registered trademarks of their respective owners

**Example:** Set the Barcode length of the minimum value 10, and the maximum value 25:

1. Scan the **Set the Maximum Length** barcode.
2. Scan the numeric barcodes"2"and"5"in Appendix A .
3. Scan the **Set the Minimum Length** barcode.
4. Scan the numeric barcodes"1"and"0"in Appendix A .



© 2024 Unitech Electronics Co., Ltd. All rights reserved.
Unitech is a registered trademark of Unitech Electronics Co., Ltd.
All product and company names are trademarks, service marks, or registered trademarks of their respective owners

# 3.21 QR Code

## 3.21.1 Enable/Disable QR Code

**Enable QR Code ***

**Disable QR Code**

## 3.21.2 Set Length Range for QR Code

Barcode length can be set to the maximum value or minimum value. The value between the maximum and the minimum is valid.

QR max length command: 023703. The parameter of this command can be set from min to 7089.

QR min length command: 023702. The parameter of this command can be set from 1 to max.

**Set the Maximum Length**

**Set the Minimum Length**

**Example:** Set the Barcode Message length of the minimum value 10, and the maximum value 25:

1. Scan the **Set the Maximum Length** barcode.
2. Scan the numeric barcodes "2" and "5" in Appendix A .
3. Scan the **Set the Minimum Length** barcode.
4. Scan the numeric barcodes "1" and "0" in Appendix A .



© 2024 Unitech Electronics Co., Ltd. All rights reserved.
Unitech is a registered trademark of Unitech Electronics Co., Ltd.
All product and company names are trademarks, service marks, or registered trademarks of their respective owners

# 3.22 QR Code URL Link

## 3.22.1 Enable/Disable QR Code URL Link

**Enable QR Code URL Link**

**Disable QR Code URL Link ***



© 2024 Unitech Electronics Co., Ltd. All rights reserved.
Unitech is a registered trademark of Unitech Electronics Co., Ltd.
All product and company names are trademarks, service marks, or registered trademarks of their respective owners

# 3.23 Data Matrix

## 3.23.1 Enable/Disable Data Matrix

**Enable Data Matrix**

**Disable Data Matrix ***

## 3.23.2 Set Length Range for Data Matrix

Barcode length can be set to the maximum value or minimum value. The value between the maximum and the minimum is valid.

Data Matrix max length command: 023603. The parameter of this command can be set from min to 3116.

Data Matrix min length command: 023602. The parameter of this command can be set from 1 to max.

**Set the Maximum Length**

**Set the Minimum Length**

**Example:** Set the Barcode length of the minimum value 10 and the maximum value 25:

1. Scan the **Set the Maximum Length** barcode.
2. Scan the numeric barcodes "2" and "5" in Appendix A .
3. Scan the **Set the Minimum Length** barcode.
4. Scan the numeric barcodes "1" and "0" in Appendix A .



© 2024 Unitech Electronics Co., Ltd. All rights reserved.
Unitech is a registered trademark of Unitech Electronics Co., Ltd.
All product and company names are trademarks, service marks, or registered trademarks of their respective owners

# 3.24 Maxi Code

## 3.24.1 Enable/Disable Maxi code

**Enable Maxi code**

**Disable Maxi code ***

## 3.24.2 Set Length Range for Maxi Code

Barcode length can be set to the maximum value or minimum value. The value between the maximum and the minimum is valid.
Maxi Code max length command: 023403. The parameter of this command can be set from min to 150.
Maxi Code min length command: 023402. The parameter of this command can be set from 1 to max.

**Set the Maximum Length**

**Set the Minimum Length**

**Example:** Set the Barcode length of the minimum value 10, and the maximum value 25:

1. Scan the **Set the Maximum Length** barcode.
2. Scan the numeric barcodes "2" and "5" in Appendix A .
3. Scan the **Set the Minimum Length** barcode.
4. Scan the numeric barcodes "1" and "0" in Appendix A .



© 2024 Unitech Electronics Co., Ltd. All rights reserved.
Unitech is a registered trademark of Unitech Electronics Co., Ltd.
All product and company names are trademarks, service marks, or registered trademarks of their respective owners

# 3.25 Aztec Code

## 3.25.1 Enable/Disable Aztec Code

**Enable Aztec Code**

**Disable Aztec Code ***

## 3.25.2 Set Length Range for Aztec Code

Barcode length can be set to the maximum value or minimum value. The value between the maximum and the minimum is valid.
Aztec Code max length command: 023306. The parameter of this command can be set from min to 3282.
Aztec Code min length command: 023305. The parameter of this command can be set from 1 to max.

**Set the Maximum Length**

**Set the Minimum Length**

**Example:** Set the Barcode length of the minimum value 10, and the maximum value 25:

1. Scan the **Set the Maximum Length** barcode.
2. Scan the numeric barcodes"2"and"5"in Appendix A .
3. Scan the **Set the Minimum Length** barcode.
4. Scan the numeric barcodes"1"and"0"in Appendix A .



© 2024 Unitech Electronics Co., Ltd. All rights reserved.
Unitech is a registered trademark of Unitech Electronics Co., Ltd.
All product and company names are trademarks, service marks, or registered trademarks of their respective owners

# 3.26 Hanxin

## 3.26.1 Enable/Disable Hanxin

**Enable Hanxin**

**Disable Hanxin ***

## 3.26.2 Set Length Range for Hanxin

Barcode length can be set to the maximum value or minimum value. The value between the maximum and the minimum is valid.
Hanxin max length command: 023803. The parameter of this command can be set from min to 7833.
Hanxin min length command: 023802. The parameter of this command can be set from 1 to max.

**Set the Maximum Length**

**Set the Minimum Length**

**Example:** Set the Barcode length of the minimum value 10, and the maximum value 25:

1. Scan the **Set the Maximum Length** barcode.
2. Scan the numeric barcodes "2" and "5" in Appendix A .
3. Scan the **Set the Minimum Length** barcode.
4. Scan the numeric barcodes "1" and "0" in Appendix A .



© 2024 Unitech Electronics Co., Ltd. All rights reserved.
Unitech is a registered trademark of Unitech Electronics Co., Ltd.
All product and company names are trademarks, service marks, or registered trademarks of their respective owners

# Chapter 4 – Data Formatter

## 4.1 Data Terminator

**Add CR ***

**Add LF**

**Add CRLF**

**Add TAB**

## 4.2 Add Prefix

**Set Custom Prefix**

**Save**

To set a customer prefix, scan the **Set Custom Prefix** barcode and the numeric barcodes which representing the hexadecimal values of a desired prefix, and then scan the **Save** barcode. Refer to Appendix C: ASCII Table for hexadecimal values of characters.

Example: Set the custom Prefix to "ODE"

1. Check the hex values of "ODE" in the ASCII Table. ("ODE": 4F, 44, 45)
2. Scan the **Set Custom Prefix** barcode.
3. Scan the numeric barcodes"9","9","4","F","4","4","4"and"5"in Appendix A .
4. Scan the **Save** barcode.

***Note: 99** indicates all symbologies*



© 2024 Unitech Electronics Co., Ltd. All rights reserved.
Unitech is a registered trademark of Unitech Electronics Co., Ltd.
All product and company names are trademarks, service marks, or registered trademarks of their respective owners

# 4.3 Add Suffix

**Set Custom Suffix**

**Save**

To set a customer suffix, scan the **Set Custom Suffix** barcode and the numeric barcodes which representing the hexadecimal values of a desired suffix, and then scan the **Save** barcode. Refer to Appendix C: ASCII Table for hexadecimal values of characters.

Example: Set the custom Suffix to "ODE"

1. Check the hex values of "ODE" in the ASCII Table. ("ODE": 4F, 44, 45)
2. Scan the **Set Custom Suffix** barcode.
3. Scan the numeric barcodes "9" , "9" , "4" , "F" , "4" , "4" , "4" and "5" in Appendix A .
4. Scan the **Save** barcode.

***Note: 99** indicates all symbollogies*

# 4.4 Clear All Prefix and Suffix

**Clear All Prefix And Suffix**



© 2024 Unitech Electronics Co., Ltd. All rights reserved.
Unitech is a registered trademark of Unitech Electronics Co., Ltd.
All product and company names are trademarks, service marks, or registered trademarks of their respective owners

# Appendix A – Digit Barcodes

## A.1 Numbers

### 0~9

0

1

2

3

4

5

6

7

8

9

## A.2 Alphabets

### A~F

A

B

C

D

E

F



© 2024 Unitech Electronics Co., Ltd. All rights reserved.
Unitech is a registered trademark of Unitech Electronics Co., Ltd.
All product and company names are trademarks, service marks, or registered trademarks of their respective owners

# Appendix B – AIM ID Table

| Symbology | AIM ID | Remark | SuperLead (Hex) |
|---|---|---|---|
| All Symbologies | | | 99 |
| EAN-13 | ]E0 | Standard EAN-13 | 64 |
| | ]E3 | EAN-13 + 2/5-Digit Add-On Code | 64 |
| EAN-8 | ]E4 | Standard EAN-8 | 44 |
| | ]E4…]E1… | EAN-8 + 2-Digit Add-On Code | 44 |
| | ]E4…]E2… | EAN-8 + 5-Digit Add-On Code | 44 |
| UPC-E | ]E0 | Standard UPC-E | 45 |
| | ]E3 | UPC-E + 2/5-Digit Add-On Code | 45 |
| UPC-A | ]E0 | Standard UPC-A | 63 |
| | ]E3 | UPC-A + 2/5-Digit Add-On Code | 63 |
| Code 128 | ]C0 | Standard Code 128 | 6A |
| GS1-128 | ]C1 | FNC1 is the character right after the start character | 49 |
| Interleaved 2 of 5 | ]I0 | No parity check | 65 |
| | ]I1 | Transmit check digit after parity check | 65 |
| | ]I3 | Do not transmit check digit after parity check | 65 |
| Industrial 2 of 5 | ]S0 | Not specified | 66 |
| Standard 2 of 5 | ]R0 | No parity check | 66 |
| | ]R8 | One check digit, MOD10; do not transmit check digit | 66 |
| | ]R9 | One check digit, MOD10; transmit check digit | 66 |
| Code 39 | ]A0 | Transmit barcodes as is; Full ASCII disabled; no parity check | 62 |
| | ]A1 | One check digit, MOD43; transmit check digit | 62 |
| | ]A3 | One check digit, MOD43; do not transmit check digit | 62 |
| | ]A4 | Full ASCII enabled; no parity check | 62 |
| | ]A5 | Full ASCII enabled; transmit check digit | 62 |
| | ]A7 | Full ASCII enabled; do not transmit check digit | 62 |
| Codebar | ]F0 | Standard Codebar | 61 |
| | ]F2 | Transmit check digit after parity check | 61 |
| | ]F4 | Do not transmit check digit after parity check | 61 |
| Code 93 | ]G0 | Standard Code 93 | 69 |



© 2024 Unitech Electronics Co., Ltd. All rights reserved.
Unitech is a registered trademark of Unitech Electronics Co., Ltd.
All product and company names are trademarks, service marks, or registered trademarks of their respective owners

| | | | |
|---|---|---|---|
| Code 11 | ]H0 | One check digit MOD11; transmit check digit | 68 |
| | ]H1 | Two check digits, MOD11/MOD11; transmit check digit | 68 |
| | ]H3 | Do not transmit check digit after parity check | 68 |
| | ]H9 | No parity check | 68 |
| GS1-DataBar (RSS) | ]e0 | Standard GS1-DataBar | 79 |
| Matrix 2 of 5 | ]X0 | Specified by the manufacturer | 6D |
| | ]X1 | No parity check | 6D |
| | ]X2 | One check digit, MOD10; transmit check digit | 6D |
| | ]X3 | One check digit, MOD11; do not transmit check digit | 6D |
| PDF417 | ]L0 | Comply with 1994 PDF417 specifications | 72 |
| Data Matrix | ]d0 | ECC000 - ECC140 | 77 |
| | ]d1 | ECC200 | 77 |
| | ]d2 | ECC200, FNC1 is the 1st or 5th character after the start character | 77 |
| | ]d3 | ECC200, FNC1 is the 2nd or 6th character after the start character | 77 |
| | ]d4 | ECC200, ECI included | 77 |
| | ]d5 | ECC200, FNC1 is the 1st or 5th character after the start character,ECI included | 77 |
| | ]d6 | ECC200, FNC1 is the 2nd or 6th character after the start character,ECI included | 77 |
| QR Code | ]Q0 | QR1 | 73 |
| | ]Q1 | 2005 version, ECI excluded | 73 |
| | ]Q2 | 2005 version, ECI included | 73 |
| | ]Q3 | QR Code 2005, ECI excluded, FNC1 is the 1st character after the start character | 73 |
| | ]Q4 | QR Code 2005, ECI included, FNC1 is the 1st character after the start character | 73 |
| | ]Q5 | QR Code 2005,ECI excluded,FNC1 is the 2nd character after the start character | 73 |
| | ]Q6 | QR Code 2005, ECI included, FNC1 is the 2nd character after the start character | 73 |

**Reference**: ISO/IEC 15424:2008 Information technology – Automatic identification and data capture techniques – Data Carrier Identifiers (including Symbology Identifiers).



© 2024 Unitech Electronics Co., Ltd. All rights reserved.
Unitech is a registered trademark of Unitech Electronics Co., Ltd.
All product and company names are trademarks, service marks, or registered trademarks of their respective owners

# Appendix C – ASCII Table

| Hex | Dec | Char | | Predefined keystrokes | CTRL+X functions |
|---|---|---|---|---|---|
| 00 | 0 | NUL | (Null char.) | Reserved | CTRL+@ |
| 01 | 1 | SOH | (Start of Header) | Enter | CTRL+A |
| 02 | 2 | STX | (Start of Text) | Caps Lock | CTRL+B |
| 03 | 3 | ETX | (End of Text) | ALT Make | CTRL+C |
| 04 | 4 | EOT | (End of Transmission) | ALT Break | CTRL+D |
| 05 | 5 | ENQ | (Enquiry) | CTRL Make | CTRL+E |
| 06 | 6 | ACK | (Acknowledgment) | CTRL Break | CTRL+F |
| 07 | 7 | BEL | (Bell) | Enter | CTRL+G |
| 08 | 8 | BS | (Backspace) | N/A | CTRL+H |
| 09 | 9 | HT | (Horizontal Tab) | Tab | CTRL+I |
| 0A | 10 | LF | (Line Feed) | N/A | CTRL+J |
| 0B | 11 | VT | (Vertical Tab) | Tab | CTRL+K |
| 0C | 12 | FF | (Form Feed) | Delete | CTRL+L |
| 0D | 13 | CR | (Carriage Return) | Enter | CTRL+M |
| 0E | 14 | SO | (Shift Out) | Insert | CTRL+N |
| 0F | 15 | SI | (Shift In) | ESC | CTRL+O |
| 10 | 16 | DLE | (Data Link Escape) | F11 | CTRL+P |
| 11 | 17 | DC1 | (XON) (Device Control 1) | Home | CTRL+Q |
| 12 | 18 | DC2 | (Device Control 2) | PrtScn | CTRL+R |
| 13 | 19 | DC3 | (XOFF) (Device Control 3) | Backspace | CTRL+S |
| 14 | 20 | DC4 | (Device Control 4) | Back Tab | CTRL+T |
| 15 | 21 | NAK | (Negative Acknowledgment) | F12 | CTRL+U |
| 16 | 22 | SYN | (Synchronous Idle) | F1 | CTRL+V |
| 17 | 23 | ETB | (End of Trans. Block) | F2 | CTRL+W |
| 18 | 24 | CAN | (Cancel) | F3 | CTRL+X |
| 19 | 25 | EM | (End of Medium) | F4 | CTRL+Y |
| 1A | 26 | SUB | (Substitute) | F5 | CTRL+Z |
| 1B | 27 | ESC | (Escape) | F6 | CTRL+[ |
| 1C | 28 | FS | (File Separator) | F7 | CTRL+\ |
| 1D | 29 | GS | (Group Separator) | F8 | CTRL+] |
| 1E | 30 | RS(Request to Send) | | F9 | CTRL+^ |



© 2024 Unitech Electronics Co., Ltd. All rights reserved.
Unitech is a registered trademark of Unitech Electronics Co., Ltd.
All product and company names are trademarks, service marks, or registered trademarks of their respective owners

| | | | | |
|---|---|---|---|---|
| 1F | 31 | US(Unit Separator) | F10 | CTRL+- |

| Hex | Dec | Char |
|---|---|---|
| 20 | 32 | SP (Space) |
| 21 | 33 | ! (Exclamation Mark) |
| 22 | 34 | " (Double Quote) |
| 23 | 35 | # (Number Sign) |
| 24 | 36 | $ (Dollar Sign) |
| 25 | 37 | % (Percent) |
| 26 | 38 | & (Ampersand) |
| 27 | 39 | ` (Single Quote) |
| 28 | 40 | ( (Right / Closing Parenthesis) |
| 29 | 41 | ) (Right / Closing Parenthesis) |
| 2a | 42 | * (Asterisk) |
| 2b | 43 | + (Plus) |
| 2c | 44 | , (Comma) |
| 2d | 45 | - (Minus / Dash) |
| 2e | 46 | . (Dot) |
| 2f | 47 | / (Forward Slash) |
| 30 | 48 | 0 |
| 31 | 49 | 1 |
| 32 | 50 | 2 |
| 33 | 51 | 3 |
| 34 | 52 | 4 |
| 35 | 53 | 5 |
| 36 | 54 | 6 |
| 37 | 55 | 7 |
| 38 | 56 | 8 |
| 39 | 57 | 9 |
| 3a | 58 | : (Colon) |
| 3b | 59 | ; (Semi-colon) |
| 3c | 60 | < (Less Than) |
| 3d | 61 | = (Equal Sign) |
| 3e | 62 | > (Greater Than) |



© 2024 Unitech Electronics Co., Ltd. All rights reserved.
Unitech is a registered trademark of Unitech Electronics Co., Ltd.
All product and company names are trademarks, service marks, or registered trademarks of their respective owners

| | | |
|---|---|---|
| 3f | 63 | ? (Question Mark) |
| 40 | 64 | @ (AT Symbol) |
| 41 | 65 | A |
| 42 | 66 | B |
| 43 | 67 | C |
| 44 | 68 | D |
| 45 | 69 | E |
| 46 | 70 | F |
| 47 | 71 | G |
| 48 | 72 | H |
| 49 | 73 | I |
| 4a | 74 | J |
| 4b | 75 | K |
| 4c | 76 | L |
| 4d | 77 | M |
| 4e | 78 | N |
| 4f | 79 | O |
| 50 | 80 | P |
| 51 | 81 | Q |
| 52 | 82 | R |
| 53 | 83 | S |
| 54 | 84 | T |
| 55 | 85 | U |
| 56 | 86 | V |
| 57 | 87 | W |
| 58 | 88 | X |
| 59 | 89 | Y |
| 5a | 90 | Z |
| 5b | 91 | [ (Left / Opening Bracket) |
| 5c | 92 | \ (Back Slash) |
| 5d | 93 | ] (Right / Closing Bracket) |
| 5e | 94 | ^ (Caret / Circumflex) |
| 5f | 95 | _ (Underscore) |
| 60 | 96 | ' (Grave Accent) |



© 2024 Unitech Electronics Co., Ltd. All rights reserved.
Unitech is a registered trademark of Unitech Electronics Co., Ltd.
All product and company names are trademarks, service marks, or registered trademarks of their respective owners

| | | |
|---|---|---|
| 61 | 97 | a |
| 62 | 98 | b |
| 63 | 99 | c |
| 64 | 100 | d |
| 65 | 101 | e |
| 66 | 102 | f |
| 67 | 103 | g |
| 68 | 104 | h |
| 69 | 105 | i |
| 6a | 106 | j |
| 6b | 107 | k |
| 6c | 108 | l |
| 6d | 109 | m |
| 6e | 110 | n |
| 6f | 111 | o |
| 70 | 112 | p |
| 71 | 113 | q |
| 72 | 114 | r |
| 73 | 115 | s |
| 74 | 116 | t |
| 75 | 117 | u |
| 76 | 118 | v |
| 77 | 119 | w |
| 78 | 120 | x |
| 79 | 121 | y |
| 7a | 122 | z |
| 7b | 123 | { (Left/ Opening Brace) |
| 7c | 124 | \| (Vertical Bar) |
| 7d | 125 | } (Right/Closing Brace) |
| 7e | 126 | ~ (Tilde) |
| 7f | 127 | DEL (Delete) |



© 2024 Unitech Electronics Co., Ltd. All rights reserved.
Unitech is a registered trademark of Unitech Electronics Co., Ltd.
All product and company names are trademarks, service marks, or registered trademarks of their respective owners