ZXP Series 9™

Card Printer

User Guide

ZEBRA

P1086707-003

ZEBRA and the stylized Zebra head are trademarks of Zebra Technologies Corporation, registered in many jurisdictions worldwide. All other trademarks are the property of their respective owners.

© 2019 Zebra Technologies Corporation and/or its affiliates. All rights reserved.

Information in this document is subject to change without notice. The software described in this document is furnished under a license agreement or nondisclosure agreement. The software may be used or copied only in accordance with the terms of those agreements.

For further information regarding legal and proprietary statements, please go to:

COPYRIGHTS: http://www.zebra.com/copyright
END USER LICENSE AGREEMENT: http://www.zebra.com/eula
SOFTWARE: http://www.zebra.com/linkoslegal
WARRANTY: http://www.zebra.com/warranty

Terms of Use

Proprietary Statement

This manual contains proprietary information of Zebra Technologies Corporation and its subsidiaries (Zebra Technologies). It is intended solely for the information and use of parties operating and maintaining the equipment described herein. Such proprietary information may not be used, reproduced, or disclosed to any other parties for any other purpose without the express, written permission of Zebra Technologies.

Product Improvements

Continuous improvement of products is a policy of Zebra Technologies. All specifications and designs are subject to change without notice.

Liability Disclaimer

Zebra Technologies takes steps to ensure that its published Engineering specifications and manuals are correct; however, errors do occur. Zebra Technologies reserves the right to correct any such errors and disclaims liability resulting therefrom.

Limitation of Liability

In no event shall Zebra Technologies or anyone else involved in the creation, production, or delivery of the accompanying product (including hardware and software) be liable for any damages whatsoever (including, without limitation, consequential damages including loss of business profits, business interruption, or loss of business information) arising out of the use of, the results of use of, or inability to use such product, even if Zebra Technologies has been advised of the possibility of such damages. Some jurisdictions do not allow the exclusion or limitation of incidental or consequential damages, so the above limitation or exclusion may not apply to you.

Publication Date

January 6, 2020

Contents

Before Printing v
- Card Type vi
- Single- or Double-Sided vii
- Ribbon Combination viii
- Print a Test Card ix

Introduction 1
- Description 1
- Printer and Laminator Components 2
- Icons 3
- Zebra Supplies 4

Installation 5
- General Information 5
- Unpacking the Printer 6
- Unpacking the Printer with a Laminator 7
- Unpacking (continued) 8
- Loading Cards 11
- Installing the Card Hoppers 12
  - Input Hopper 12
  - Output Hopper 13
- Installing the Cleaning Cartridge 14
- Installing the Cleaning Roller 15
- Loading the Transfer Film 16
- Loading Print Ribbon 17
- Loading Laminate 18
  - Installing the Laminate Cassette 21
  - Replacing the Laminate 23
  - Using Partial-Width Laminate 26
  - Laminating Contact Smart Cards 28
- Plugging in the Printer 30
- Connecting a USB Cable 31
- Connecting an Ethernet Cable 32
- Turning on the Printer 33
- Installing the Software 34
  - Supported Operating Systems 34
  - Supported Sharing Combinations 35
- Packing for Shipment 36
  - Printer 36
  - Printer with Laminator 38

Operation **41**
Introduction 41
Printing Preferences 42
Card Type Selection 43
Print Ribbon Selection 44
Printing a Test Card 46
Manual Card Feed 49
Operator Control Panel (OCP) 51
Printer Menu Information 52
Messages 60
Operational 60
Warning Messages 61
Error Messages 61

Maintenance **63**
Cleaning the Printer 64
When to Clean 64
Rollers 64
Platen 66
Replacing the Cleaning Rollers 66
Cleaning the Laminator 67
When to Clean 67
Laminator 67
Cleaning the Printhead 72
Magnetic Encoder Cleaning 73

Troubleshooting **75**
OCP Error Messages 75
Clearing a Card Jam 83
Printer 83
Laminator 84
OCP Test Cards 86
Adjustments 87
Overview 87
Laminator Adjustments 89
Identifying Job Quality Issues 90
Print Quality Issues 90
Transfer Quality Issues 91
Ethernet Indicators—Detail 98

Network Operations **99**
Printer Connections 100
Printer Sharing 100
External Print Server 100
Internal Print Server 100
Adding a Network Printer (Windows 7) 101
Wi-Fi Connectivity 102
Description 103
Security 103
Setup via Browser Console 104
Setup via OCP 107
Printer Pooling 108
Setting Up Printer Pooling (Windows 7) 108
Using the Printer Pool 109
Printer Sharing 109

Setting Custom Card Specifications 111
Introduction 111
Process 112

Magnetic Card Encoder 115
Introduction 115
Ribbon Selection 116
Driver Setting 116
Media Loading Orientation 118
Magnetic Encoding Type 119
ISO (Default) 119
AAMVA 120
CUSTOM 120
BINARY 120
Laminating Mag Cards 121
Using Partial-Width Laminate 121

Smart Card Encoder 123
Introduction 123
Ribbon Selection 124
Contact Smart Cards 124
Printing on Contactless Smart Cards 124
Driver Setting 125
Media Loading Orientation 126
Contact Smart Cards 126
Contactless Smart Cards 126
Contact Station Smart Card Interface 127
Laminating Contact Smart Cards 127

Contents

Before Printing

Before your first print, there are several settings that need to be checked:

- Check that the proper card type is selected
- Check that either single- or double sided-printing is selected
- Check that the correct ribbon combination is selected
- Print a test card

Card Type

From the Printing Preferences Control Panel, select the **Card type in use** drop-down menu and select the appropriate card type.

The menu contains six different card types that are supported by the printer, if there is not a card type that suits your needs, select either Custom 1 or Custom 2 and enter the specifications for the custom card type—see Setting Custom Card Specifications on page 111.

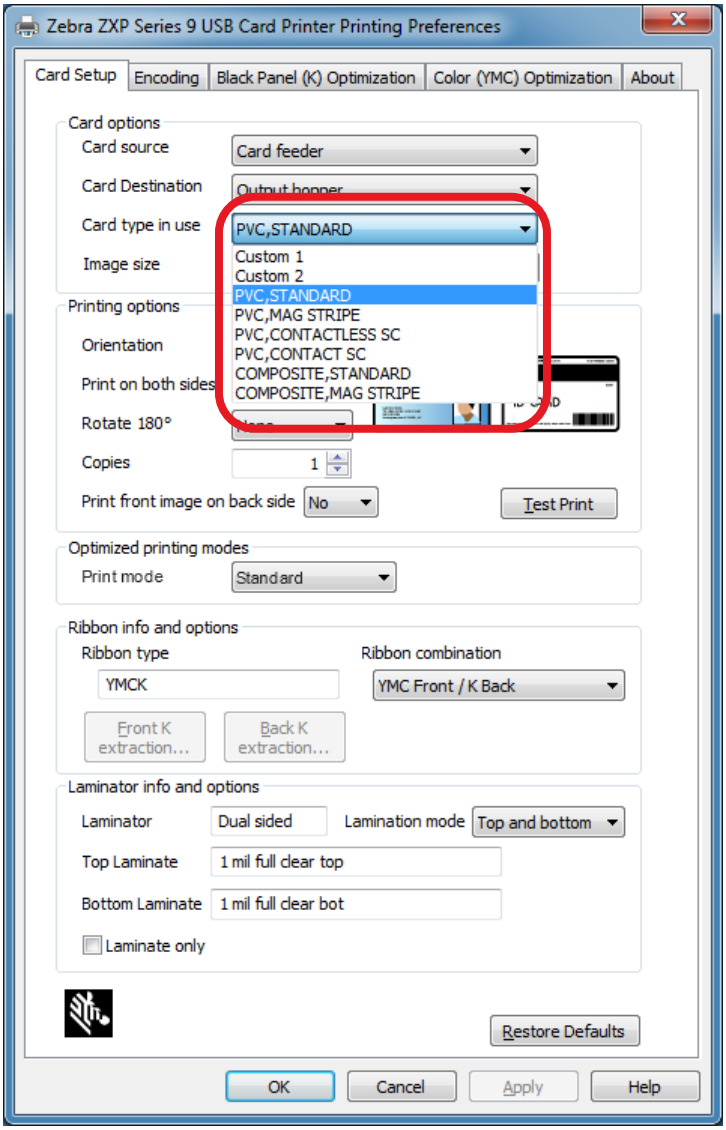

See Card Type Selection on page 43 for more detailed information.

Single- or Double-Sided

The ZXP Series 9 comes in either a single- or double sided configuration. If you have a single-sided printer, you can skip this step. If you have a double-sided printer, and want to be able to print on both sides of the card, select Yes from the **Print on both sides** drop-down menu.

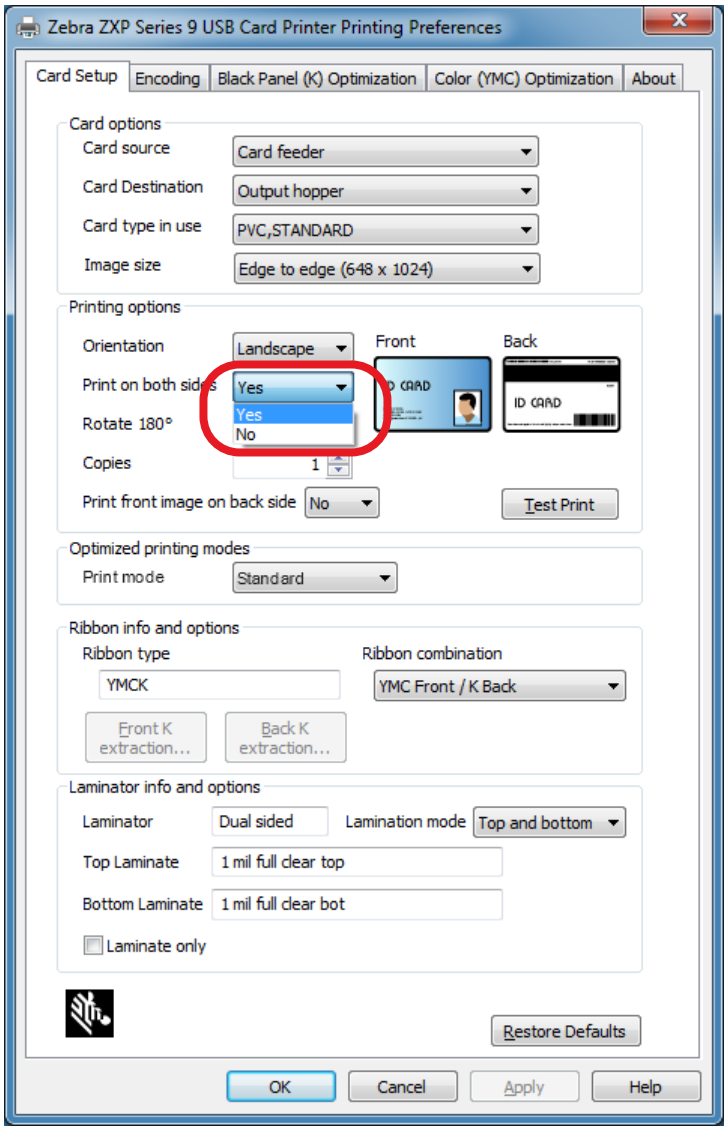

Ribbon Combination

The ZXP Series 9 supports many different ribbon types for many different printing requirements, and each ribbon type may support multiple ribbon combinations. For example, a YMCK ribbon may support printing color on the front and black on the back (YMC Front / K Back), or color on the back and front (YMCK Front / YMCK Back). Depending on your printing requirements, select the appropriate ribbon combination from the **Ribbon combination** drop-down menu.

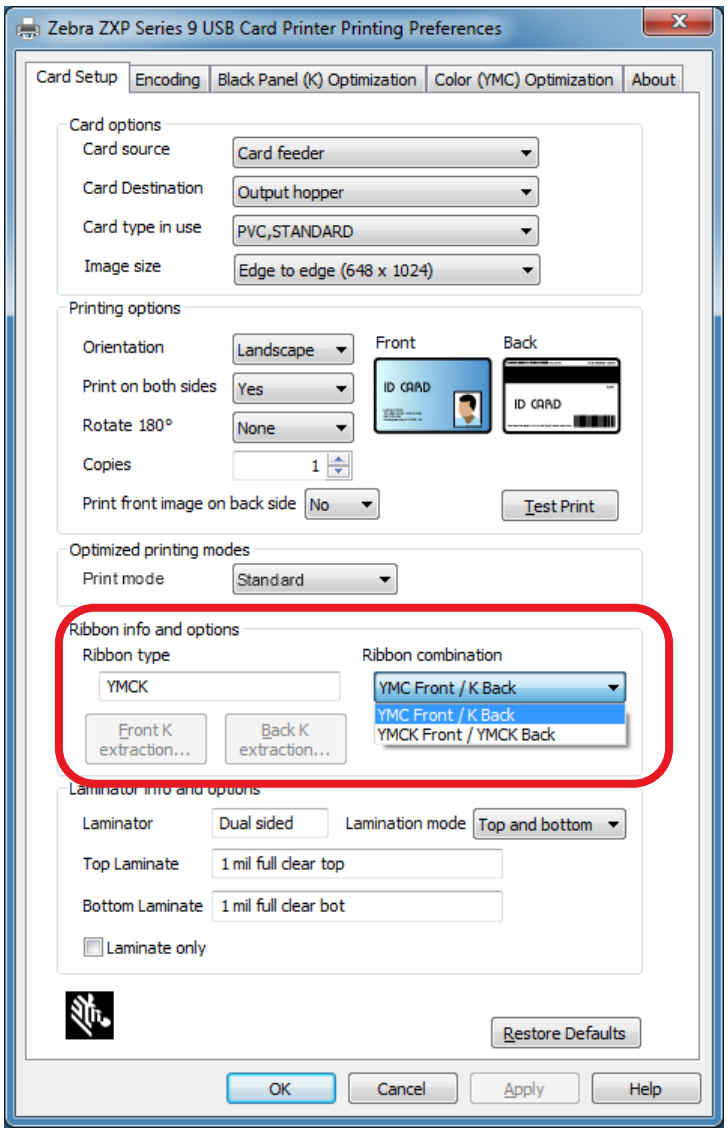

See Print Ribbon Selection on page 44 for more detailed information.

Print a Test Card

Once all your preferences have been set, click **Test Print**.

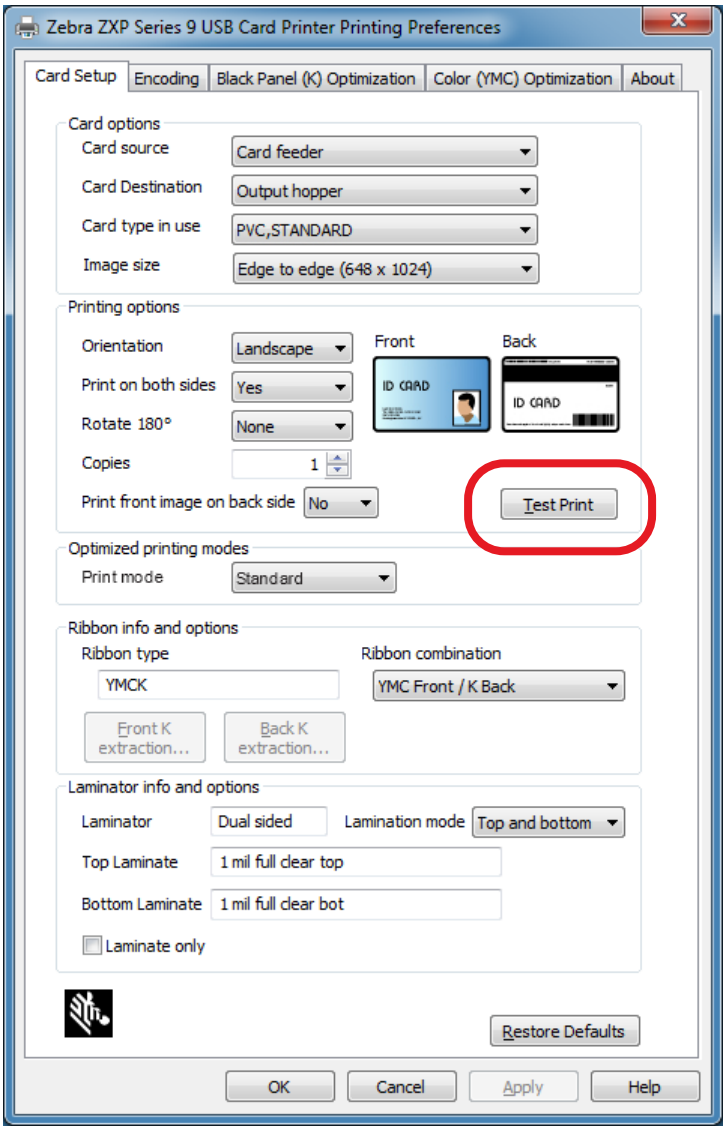

See Printing a Test Card on page 46 for more detailed information.

Introduction

Description

This manual contains installation, operation, maintenance, troubleshooting, and networking information for the ZXP Series 9; and describes single- and double-sided printers, and double-sided printers with either a single- or double-sided laminator; and is intended to be used by an operator, as well as an experienced IT person.

The ZXP Series 9 uses reverse transfer printing technology to create photo-quality and over-the-edge images on plastic identification cards. The ZXP Series 9 provides fast throughput and a range of encoding options for a variety of markets and applications.

The single-sided laminator applies a laminating film on the top surface of the printed card for added security; the double-sided laminator applies laminating film on both the top and bottom surfaces of the card.

References in this document to “the laminator” apply to either a single- or double-sided laminator.

Printer and Laminator Components

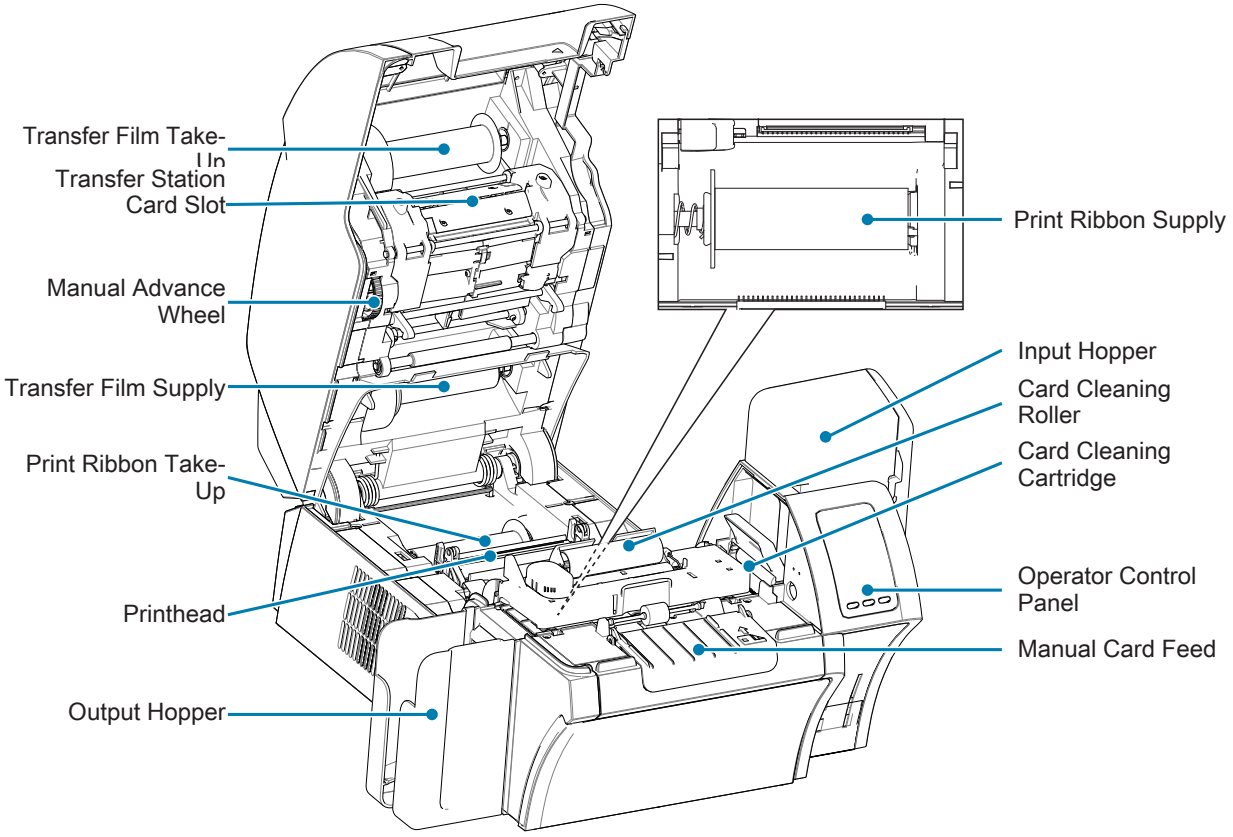

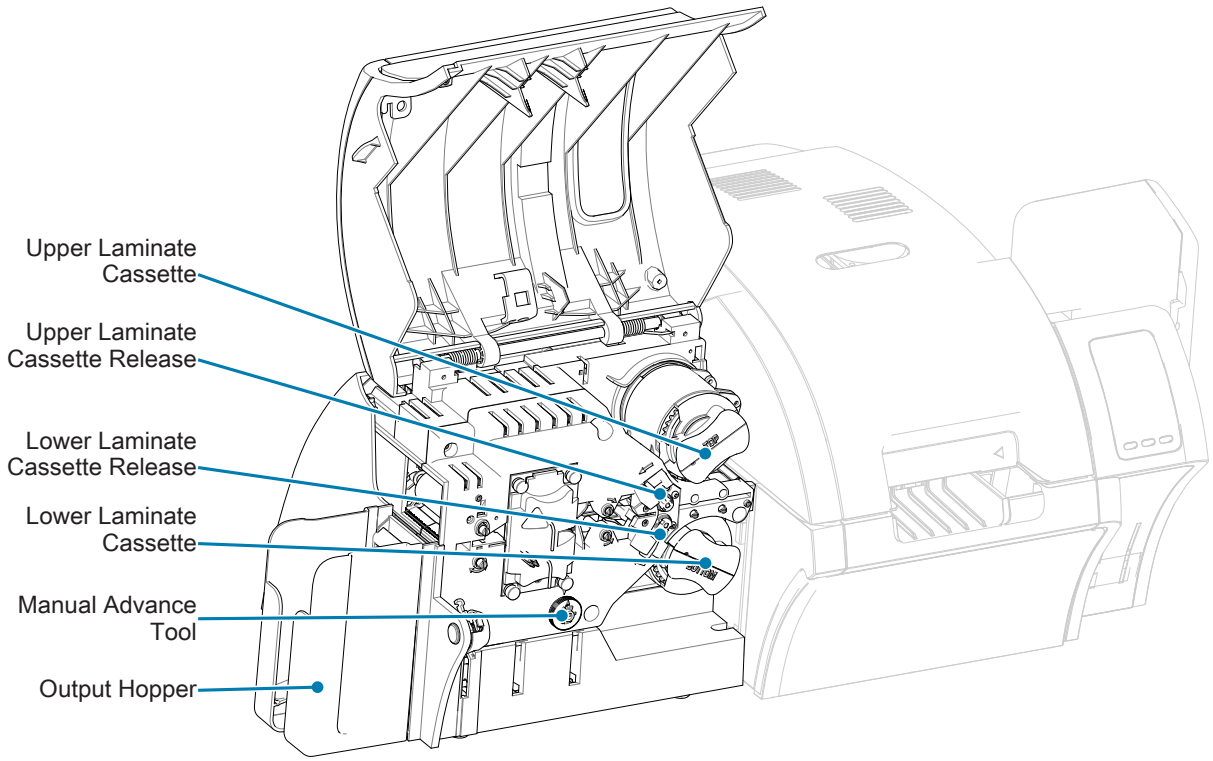

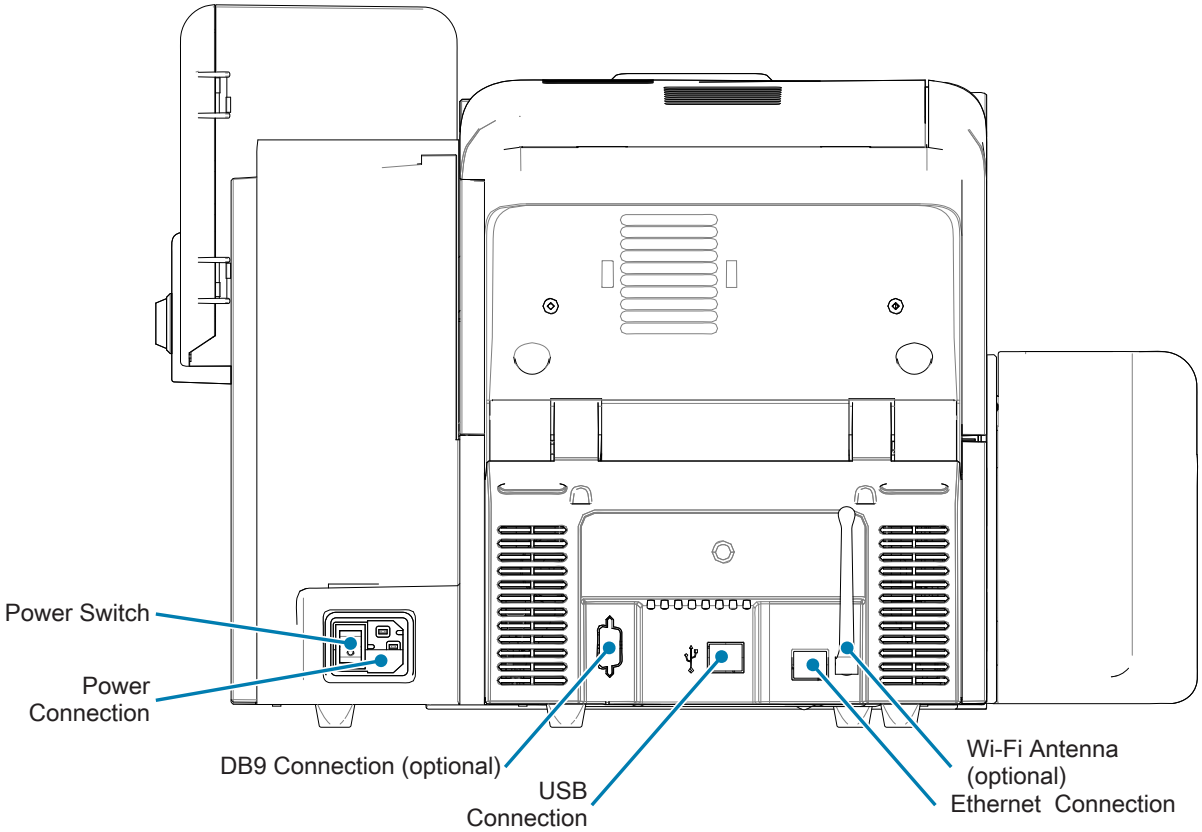

Icons

Throughout this manual, different icons highlight important information, as follows:

Note • Indicates information that emphasizes or supplements important points of the main text.

Important • Advises you of information that is essential to complete a task, or points out the importance of specific information in the text.

Electrostatic Discharge • Warns you of the potential for electrostatic discharge.

Electric Shock • Warns you of a potential electric shock situation.

Hot Surface • Warns you of a situation where excessive heat could cause a burn.

Caution • Advises you that failure to take or avoid a specific action could result in physical harm to you, or could result in physical damage to the hardware.

Zebra Supplies

Genuine Zebra supplies meet stringent quality standards and are recommended for optimal printing quality and proper printer performance. The ZXP Series 9 is designed to work only with Zebra True Colours® i Series™ Ribbons, Zebra True Colours i Series Transfer Film, and Zebra True Secure™ i Series Laminates. Go to the ZXP Series 9 Card Printer support page at www.zebra.com/zxp9-info for ordering information.

Installation

General Information

This section provides information on the installation and setup of the ZXP Series 9—procedures should be performed in the order presented.

Unpacking the Printer

Important • Save all the packing material and the shipping carton in case the printer needs to be moved or shipped. If the original packing material is lost or damaged, a replacement shipping kit can be ordered from Zebra.

Make sure the following items are included with your printer:

- ☐ Setup Guide (to be used as a reference poster)
- ☐ Product Registration Card
- ☐ Printer Test Cards
- ☐ Input Hopper with stack of 100 cards
- ☐ Output Hopper
- ☐ Cleaning Cartridge
- ☐ Cleaning Roller
- ☐ USB Cable
- ☐ Power Cable

If any items are missing, please contact your Zebra representative.

Place the printer in a location that meets the following requirements:

- A reasonably dust- and dirt-free environment.
- Flat surface at least 27 x 28 inches (686 x 711 mm) that can support the weight of the printer; additional space preferred. Allow a 4-inch minimum clearance on all sides.
- Vertical clearance at least 32 inches (813 mm).
- Temperature within the range of 59–95°F (15–35°C).
- Relative humidity 20–80% inclusive, non-condensing.
- AC power accessible.

Unpacking the Printer with a Laminator

Important • Save all the packing material and the shipping carton in case the printer needs to be moved or shipped. If the original packing material is lost or damaged, a replacement shipping kit can be ordered from Zebra.

Make sure the following items are included with the printer:

- ☐ Setup Guide (to be used as a reference poster)
- ☐ Product Registration Card
- ☐ Printer Test Cards
- ☐ Upper Laminate Cassette (for single- and double sided printers)
- ☐ Lower Laminate Cassette (for double-sided printers)
- ☐ Input Hopper with stack of 100 cards
- ☐ Output Hopper
- ☐ Cleaning Cartridge
- ☐ Cleaning Roller
- ☐ USB Cable
- ☐ Power Cable

If any items are missing, please contact your Zebra representative.

Place the printer in a location that meets the following requirements:

- A reasonably dust- and dirt-free environment.
- Flat surface at least 38 x 28 inches (965 x 711 mm) deep that can support the weight of the printer; additional space preferred. Allow a 4-inch minimum clearance on all sides.
- Vertical clearance at least 32 inches (813 mm).
- Temperature within the range of 59–95°F (15–35°C).
- Relative Humidity 20–80% inclusive, non-condensing.
- AC power accessible.

Unpacking (continued)

The ZXP Series 9 ships with packing material and tape to protect the printer from damage during shipment—it is important to remove all packing material and tap prior to using the printer.

Remove the tape and packing material from the front and rear of the printer as shown.

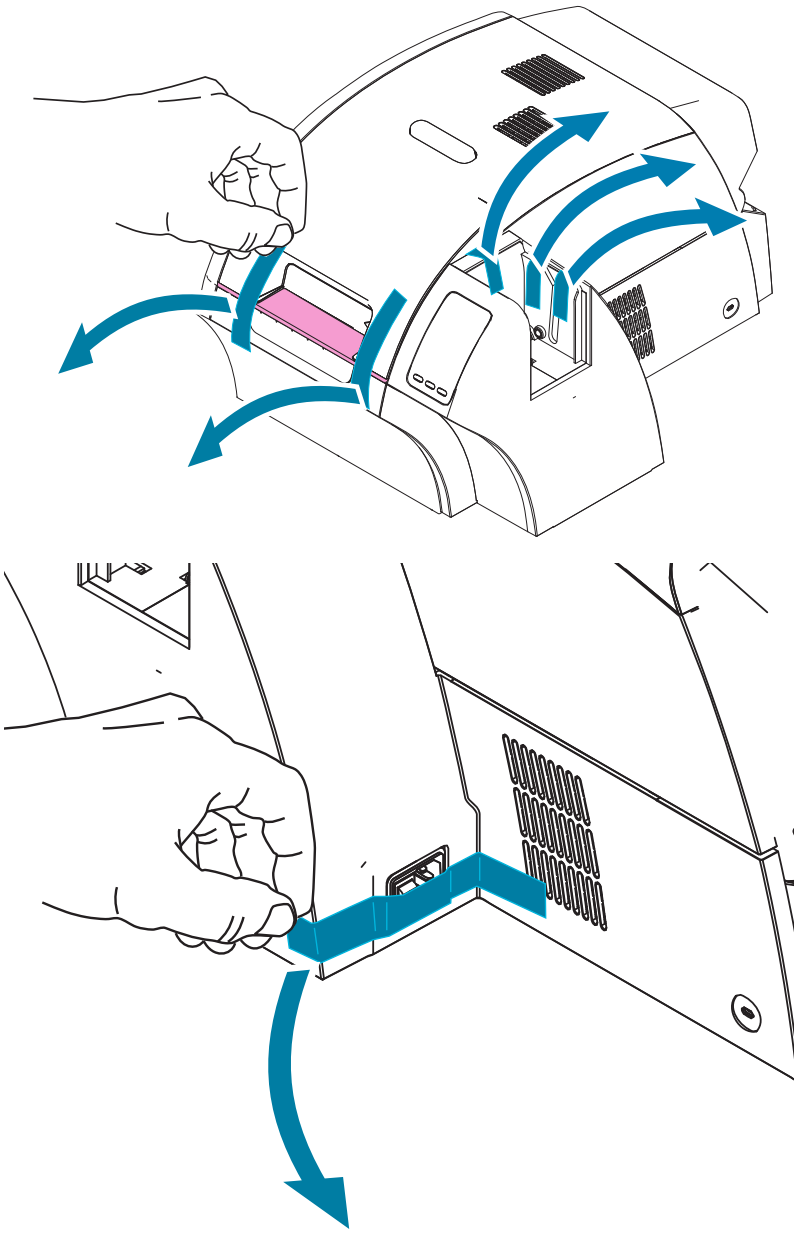

Then, open the printer by pressing the yellow release button and remove the packing material.

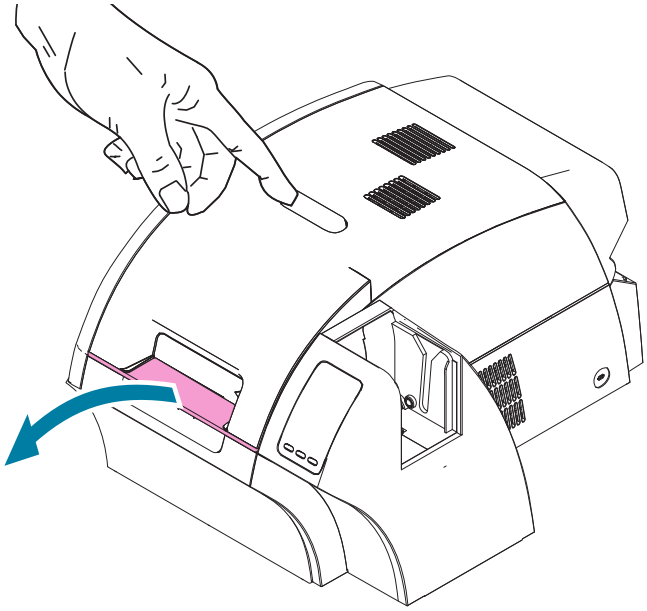

If the printer came with the optional laminator installed, remove the packing tape from the laminator.

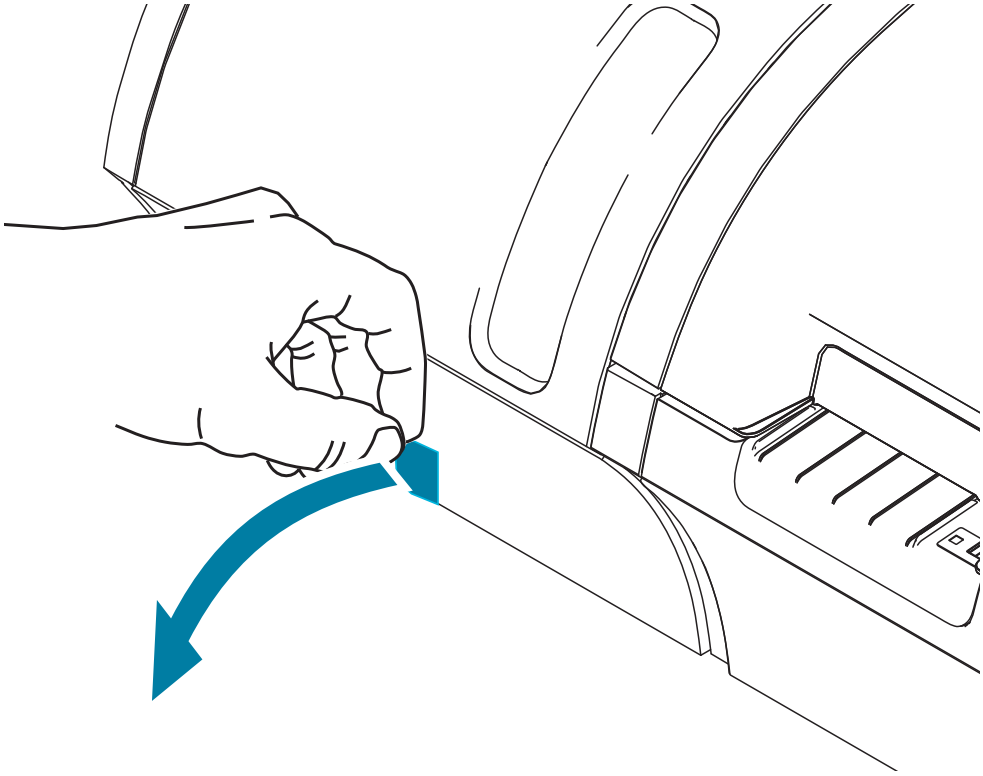

Then, open the laminator cover by pulling forward on the tab on the left side of the laminator cover and remove the packing tape.

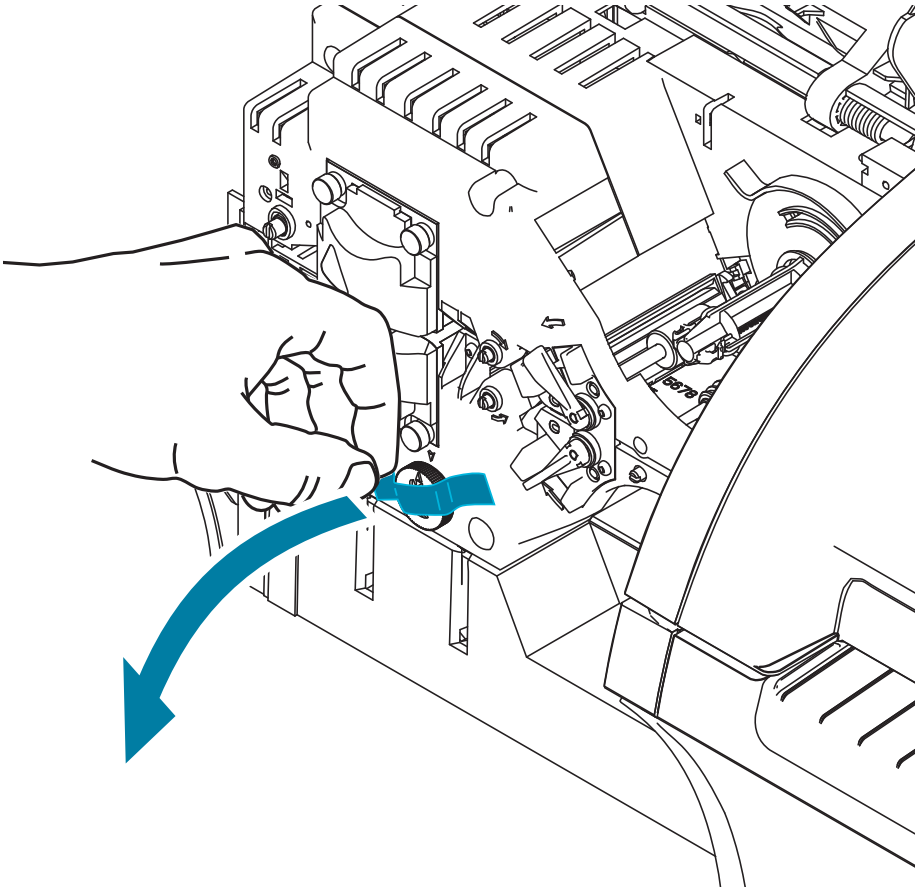

Loading Cards

Caution • DO NOT bend cards or touch print surfaces as this can reduce print quality. The surface of the cards must remain clean and dust free. Always store cards in an enclosed container. Ideally, use cards as soon as possible.

Step 1. Remove the wrapping from the card deck.

Step 2. Holding the card deck by the sides (do not touch the print surfaces), hold it vertically against a flat surface such as a desktop. If the deck is too thick for your hand to hold it comfortably, use about half a deck at a time.

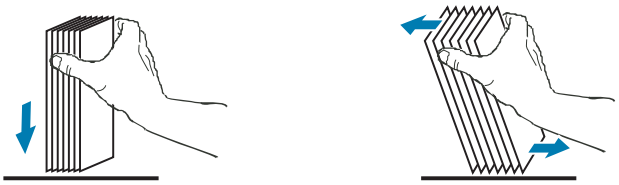

Step 3. Push the stack back and forth to an angle of about 45° from vertical, so as to separate all of the cards.

Note • Static charges and edge burrs from the card die-cutting process can render individual cards stuck together with significant adhesion force. These cards must be physically separated from each other before inserting into the feeder; if not separated, feeding or printing problems may occur.

Step 4. Restore the card stack to its original squared-off condition.

Step 5. Open the input hopper door—cards can be loaded into the hopper while it is attached to the printer.

Step 6. Place the cards in the input hopper in the orientation shown: smart card contacts (if present) up and toward the body of the printer; mag stripe (if present) down and to the rear). Ensure that the cards are seated flat on the bottom of the hopper.

Step 7. Close the input hopper door.

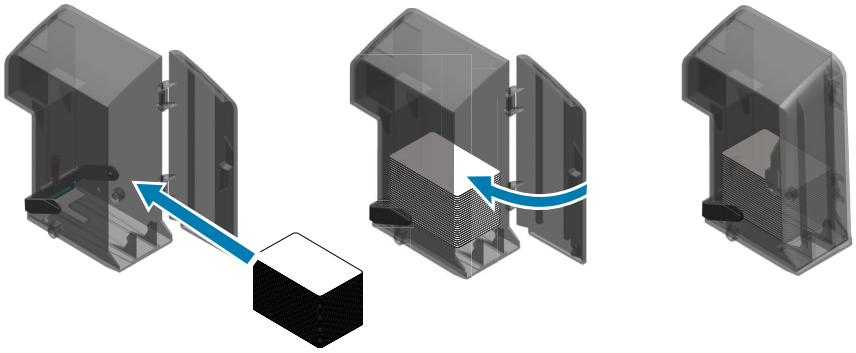

Installing the Card Hoppers

Input Hopper

The input hopper is positioned on the right side of the printer and holds the cards to be printed.

Step 1. Install the input hopper by sliding it into the receptacle so that the guide posts on the hopper (circled below) align with the guide slots (arrows below).

Step 2. Ensure that the input hopper locks securely in place.

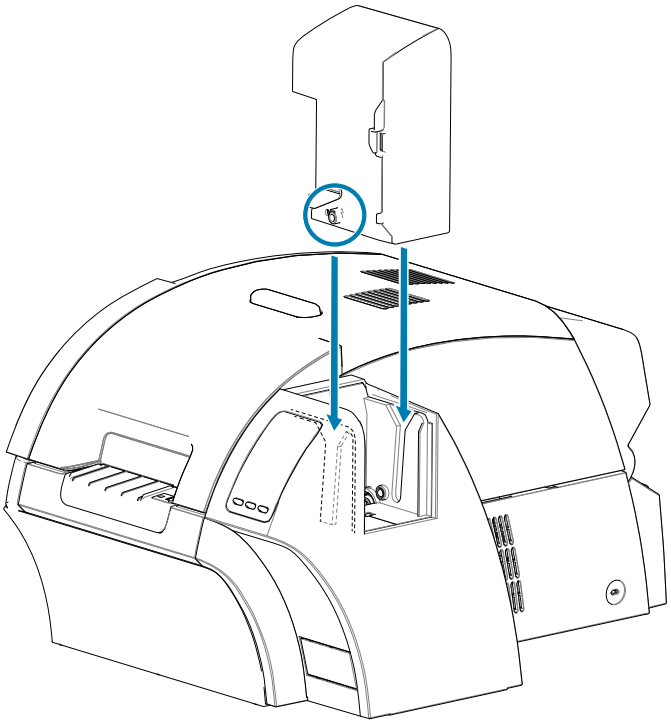

Output Hopper

The output hopper is positioned on the left side of the printer (or the left side of the laminator if the printer includes a laminator) and receives the printed cards.

Step 1. Install the output hopper by placing the hopper onto the printer or laminator, and then sliding downward into the corresponding slots on the printer or laminator.

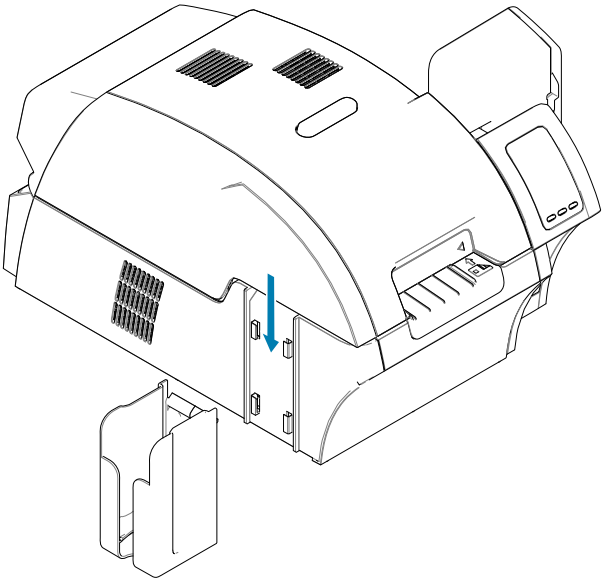

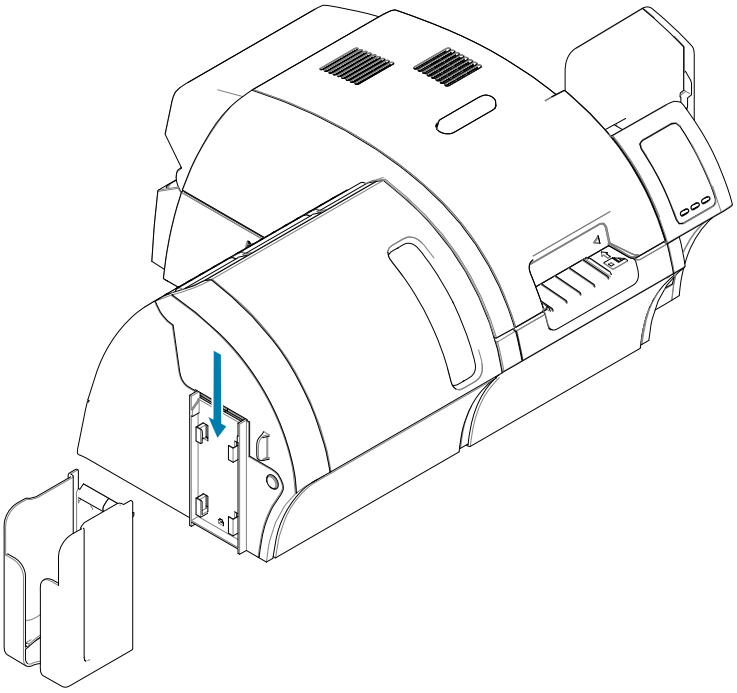

Installing the Cleaning Cartridge

The card cleaning cartridge (X-Cleaning Roller) cleans the cards entering the printer through the input hopper. The cleaning cartridge consists of a cartridge frame and an adhesive roller.

Step 1. While holding the cleaning cartridge by the frame, peel the protective wrapper from the adhesive roller. Do not touch the adhesive surface of the roller.

Step 2. Install the cleaning cartridge into the area shown in the figure below by sliding the cartridge guide pins into the guide slots on the printer.

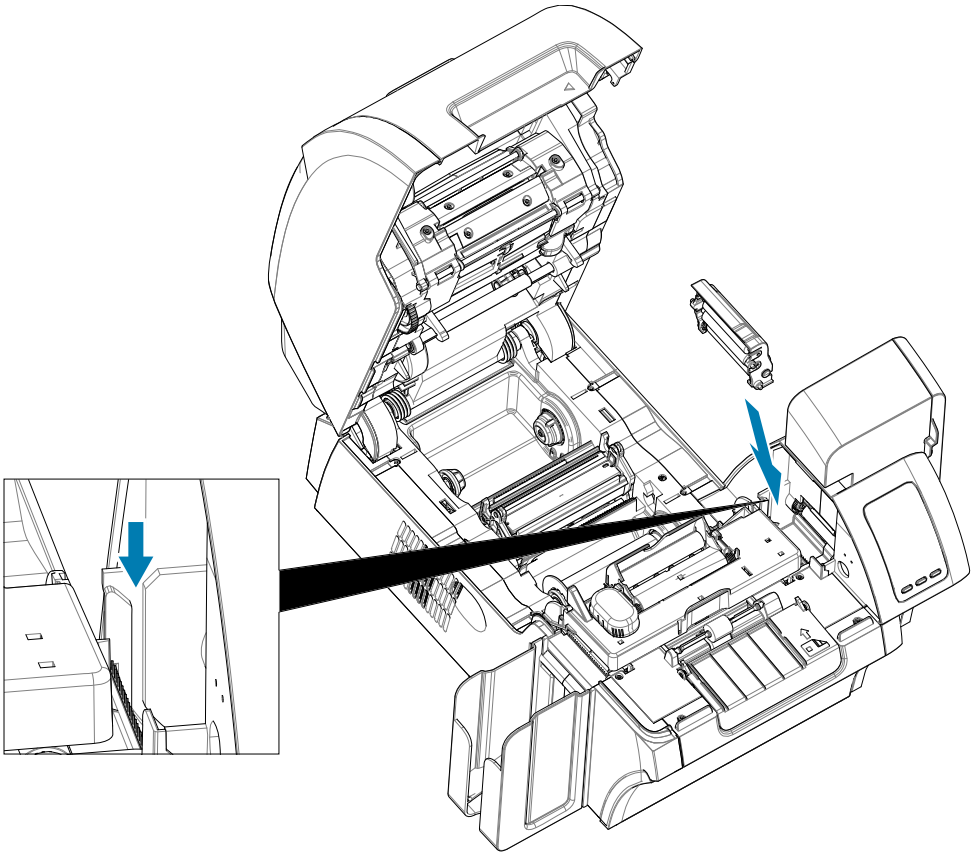

Step 3. Press down on the cartridge until it is fully seated.

Note • To ensure print quality, the card cleaning cartridge requires periodic replacement. New card cleaning rollers are included with each print ribbon or may be purchased separately. Before replacing the card cleaning cartridge or its adhesive roller, clean the printer—see Cleaning the Printer on page 64. To replace the X-Roller, refer to Maintenance on page 63.

Installing the Cleaning Roller

The cleaning roller (Y-Cleaning Roller) cleans the cards entering the printer from either the input hopper or the manual feed slot.

Step 4. Peel the protective wrapper from the cleaning roller.

Step 5. Install the cleaning cartridge into the area shown in the figure below by placing it into the notches on the printer. Use the protective wrapper to push the cleaning roller into place until it locks into position.

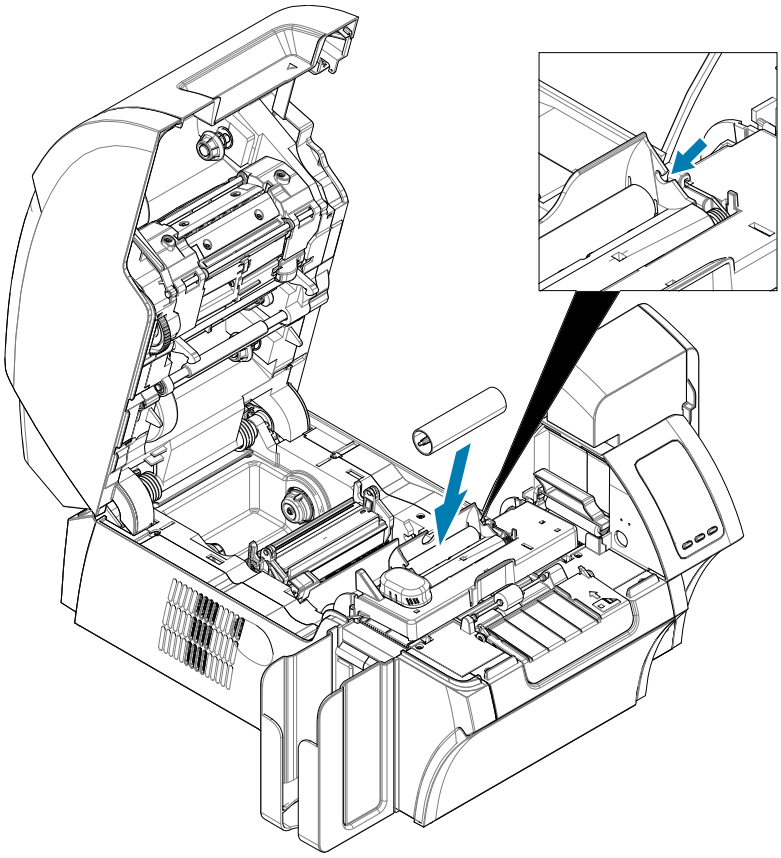

Note • To ensure print quality, the card cleaning cartridge requires periodic replacement. New card cleaning rollers are included with each print ribbon or may be purchased separately. Before replacing the card cleaning cartridge or its adhesive roller, clean the printer—see Cleaning the Printer on page 64. To replace the Y-Roller, refer to Replacing the Cleaning Rollers on page 66.

Loading the Transfer Film

The ZXP Series 9 is designed to work only with Zebra True Colours® i Series™ Transfer Film for near photographic print resolution and over-the-edge printing.

Step 1. Locate the transfer film supply spindles and the transfer film take-up spindles. Note that the flanges and spindles are color coded (white-to-white, green-to-green).

Step 2. Unroll about 1 foot (30 cm) from the full roll of transfer film on the supply spool and wind it (about 2 wraps) onto the empty take-up spool.

Step 3. Load transfer film supply spool onto the supply spindles—green flange side to the left.

Step 4. Load the empty take-up spool onto the take-up spindles—white flange side to the right.

Step 5. Make sure the spring-loaded spindles on the right seat into the spools.

Step 6. Make sure the transfer film comes off the bottom of the supply spool and feeds to the bottom of the take-up spool.

Step 7. Route the transfer film under the retaining tab.

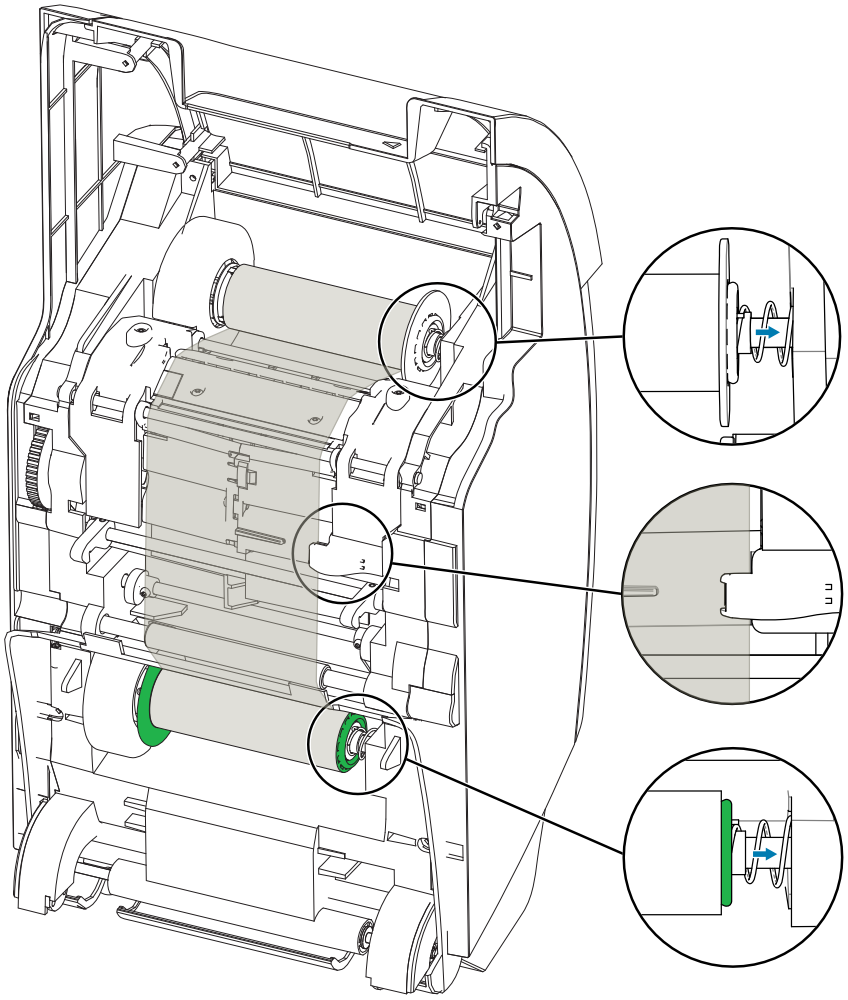

Loading Print Ribbon

The ZXP Series 9 is designed to work with Zebra True Colours® i Series™ Ribbons. Each new ribbon comes with a replacement set of cleaning rollers. It is recommended that they be replaced for each new ribbon or every 5,000 cards. Refer to Cleaning the Printer on page 64 for recommended cleaning intervals, and Maintenance on page 63 for replacement instructions.

Step 1. Locate the print ribbon supply spindles and the print ribbon take-up spindles. Note that the flanges and spindles are color coded (blue-to-blue, purple-to-purple).

Step 2. Load the print ribbon supply spool onto the supply spindles—purple flange side to the left.

Step 3. Load the empty take-up spool onto the take-up spindle, blue flange side to the right—make sure the spring-loaded spindles on the left seat into the spools.

Step 4. Make sure the print ribbon comes off the bottom of the supply spool and feeds to the bottom of the take-up spool.

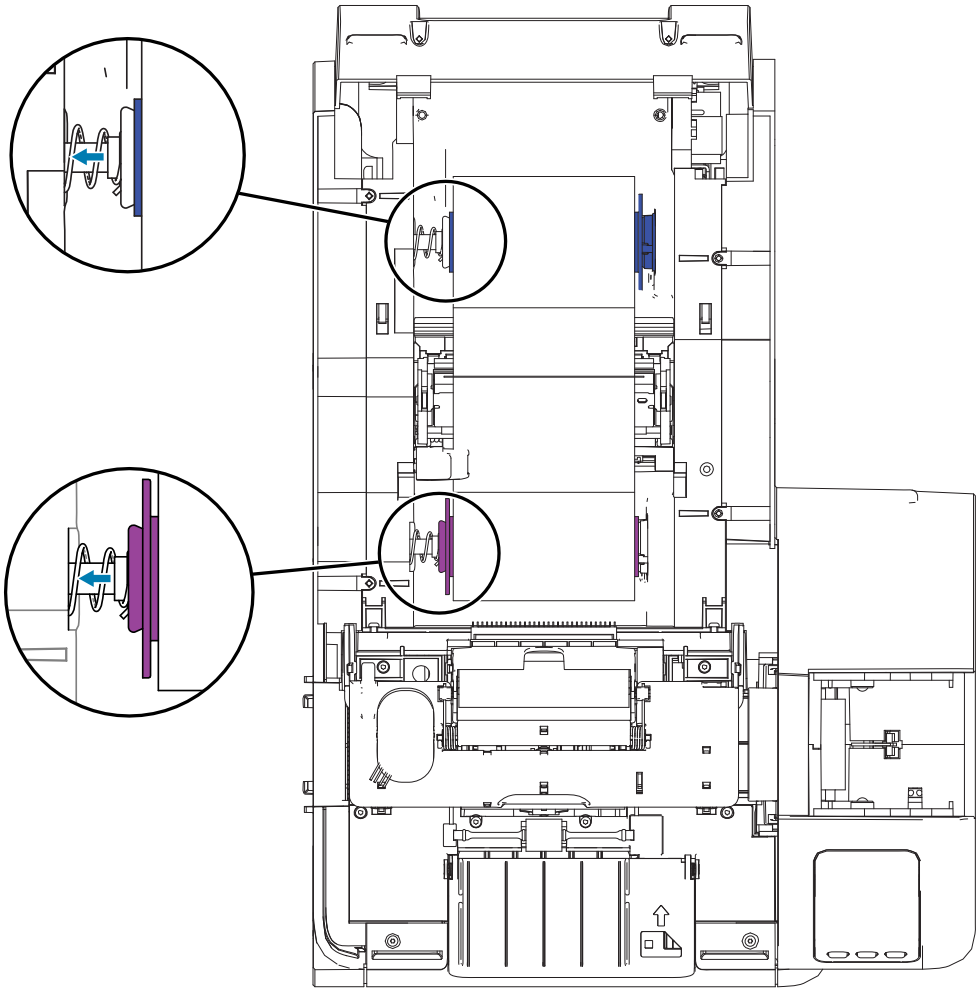

Loading Laminate

Note • The laminate roll is specific to either the top (blue) or the bottom (yellow) laminate cassette.

Note • The lower laminate cassette (yellow) is used on a double-sided laminator only.

Important • The geared flange on the laminate spool is removable, but do not remove it. If it does come off, snap it back onto the end of the spool.

Step 1. Remove a new roll of laminate from its packaging and place it in the upper laminate cassette—note the orientation of the laminate spool with respect to the laminate cassette.

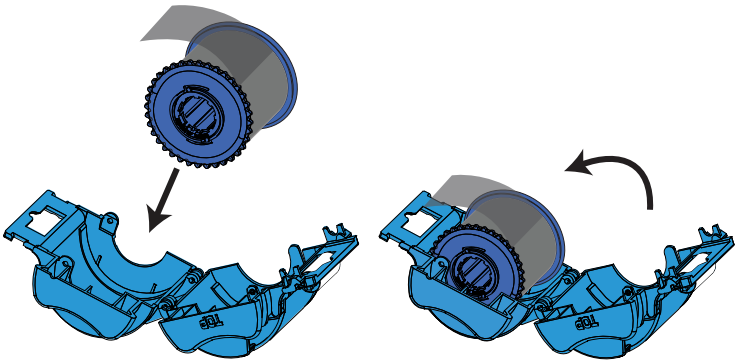

Step 2. Pull out an inch or two of laminate past the lip of the cassette.

Step 3. Close the cassette—press the two halves of the cassette together until it clicks.

Step 4. Cut the laminate square (as close to perpendicular as possible) with scissors. Hold the scissors in one hand. Hold the cassette with the other hand. Press the laminate firmly against the white roller thereby keeping the laminate from moving while cutting.

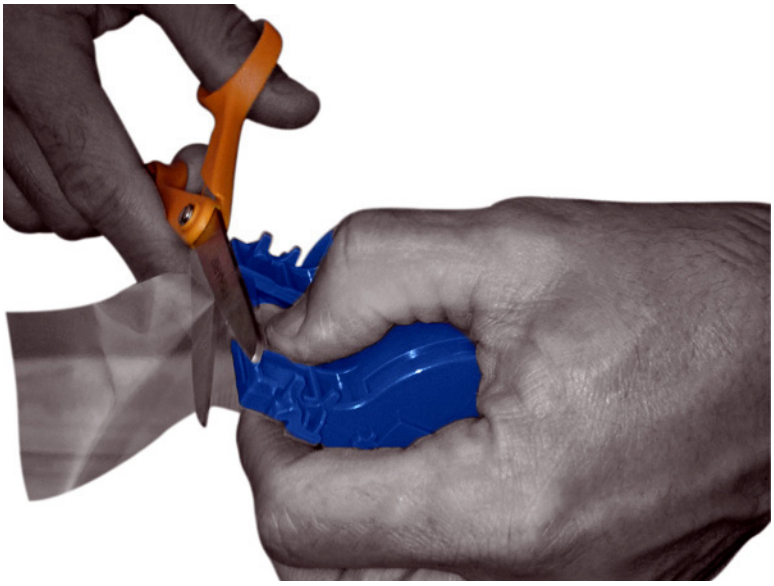

Step 5. Remove a second new roll of laminate from its packaging and place it in the lower laminate cassette—note the orientation of the laminate spool with respect to the laminate cassette.

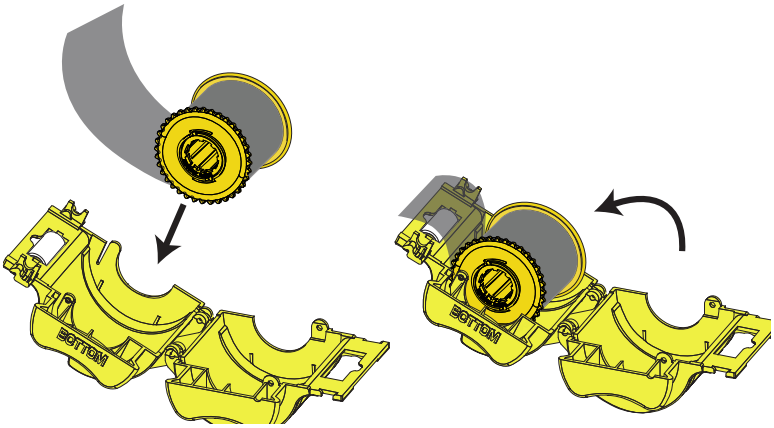

Step 6. Pull out an inch or two of laminate past the lip of the cassette.

Step 7. Close the cassette—press the two halves of the cassette together until it clicks.

Step 8. Cut the laminate square (as close to perpendicular as possible) with scissors. Hold the scissors in one hand. Hold the cassette with the other hand. Press the laminate firmly against the white roller thereby keeping the laminate from moving while cutting.

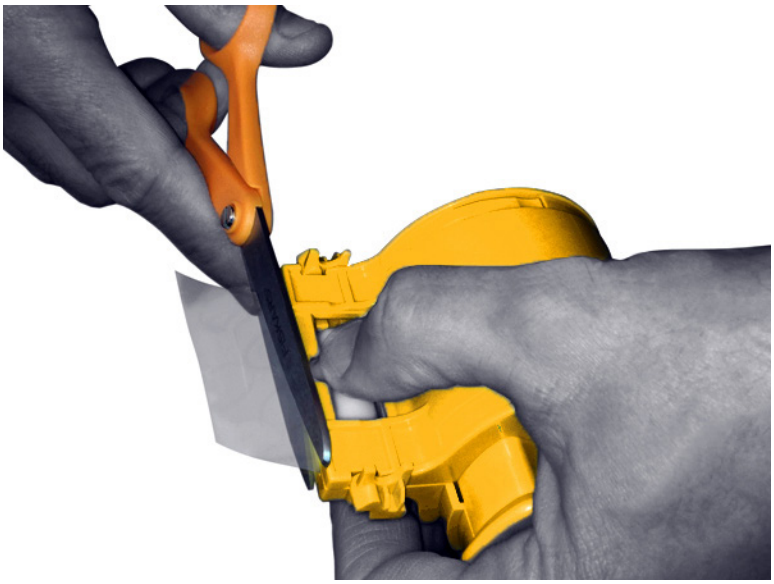

Step 9. Rotate the core to adjust the laminate overhang. Stop when the end of the laminate is just beyond the lip of the cassette, as shown below.

Important • Check for laminate overhang any time the locking lever is pressed or the cassette is removed.

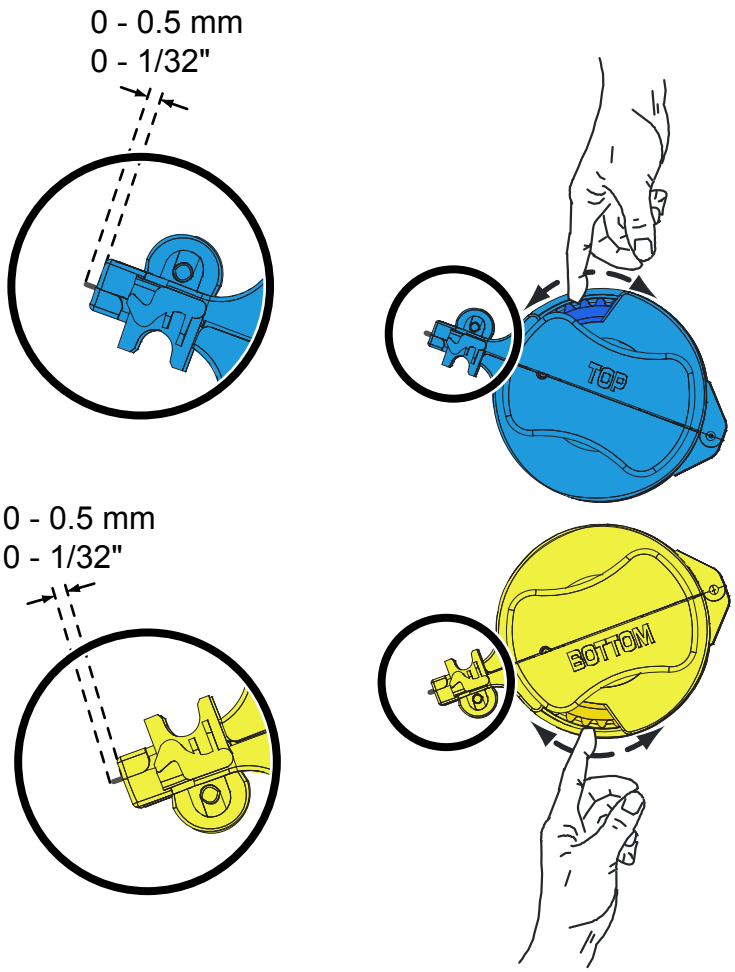

Installing the Laminate Cassette

Step 1. Grasp the door at the side tab front and pull forward and lift the door to its upright position.

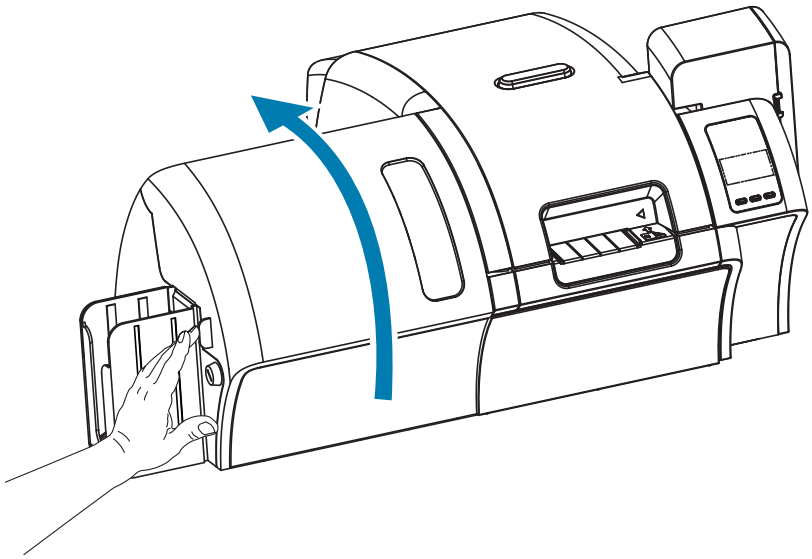

Step 2. Slide the cassette onto the spindle.

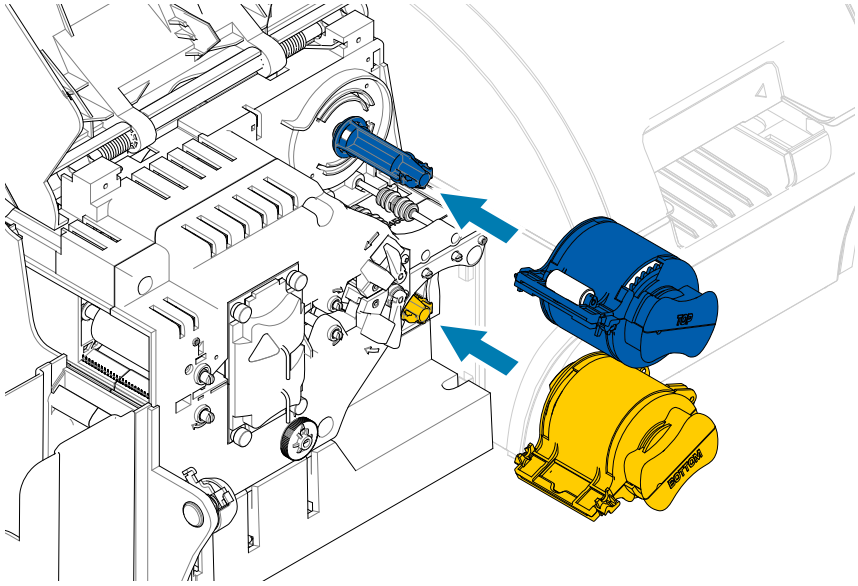

Step 3. Rotate each cassette (in the direction indicated in the figure below).

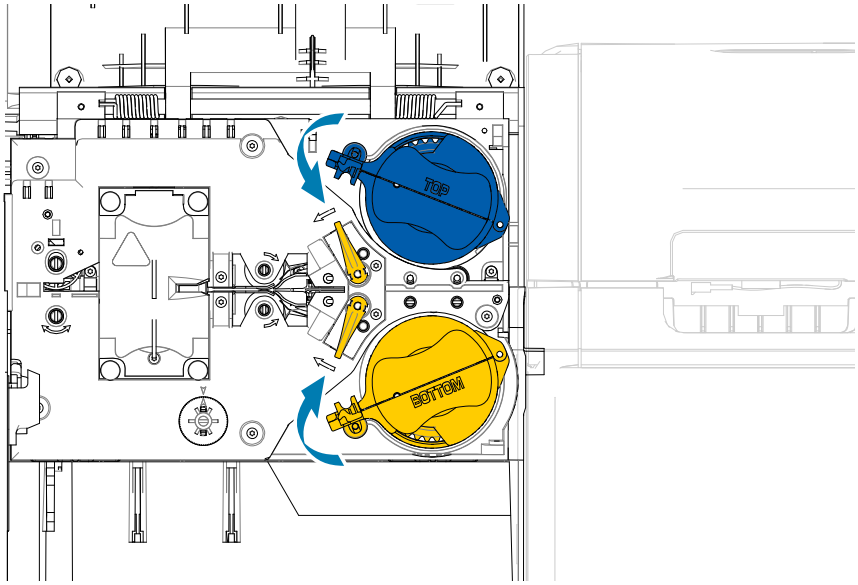

Step 4. Continue to turn the cassette. The locking lever will move to the left as the cassette rotates over the locking mechanism, and will then click into the locked (green) position.

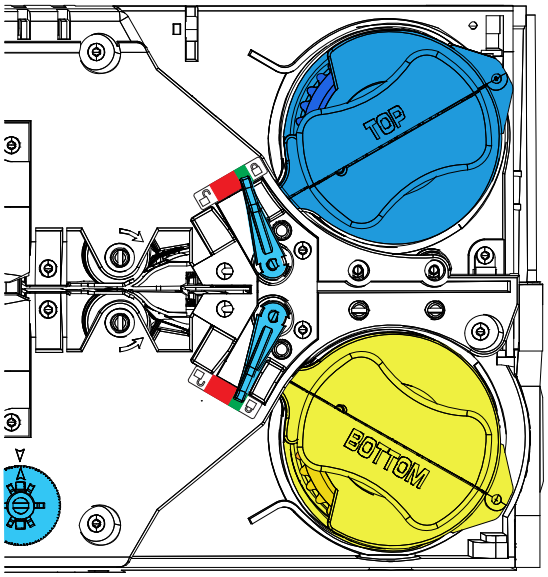

Replacing the Laminate

Step 1. Grasp the door at the side tab front and pull forward and lift the door to its upright position.

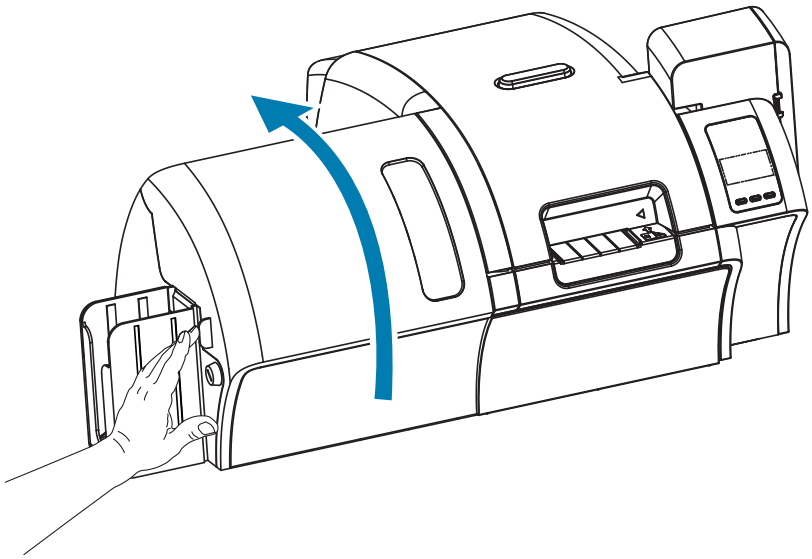

Step 2. Unlock the laminate cassette by rotate the locking lever in the direction indicated.

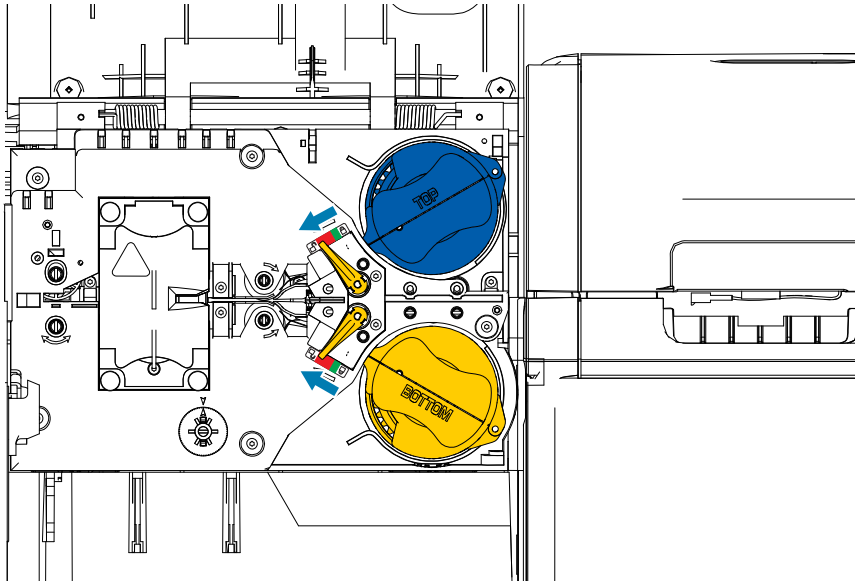

Step 3. Rotate each cassette in the direction indicated below until it stops.

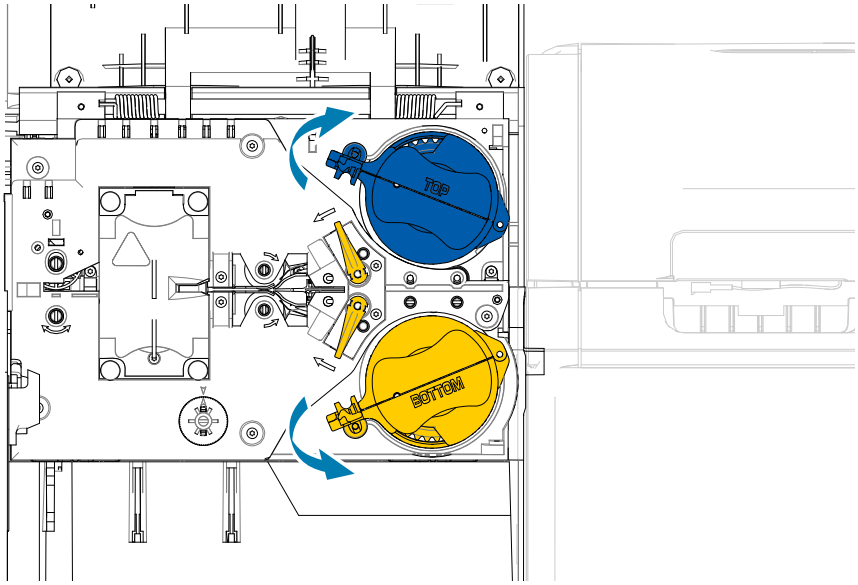

Step 4. Remove each cassette by pulling straight out from its spindle.

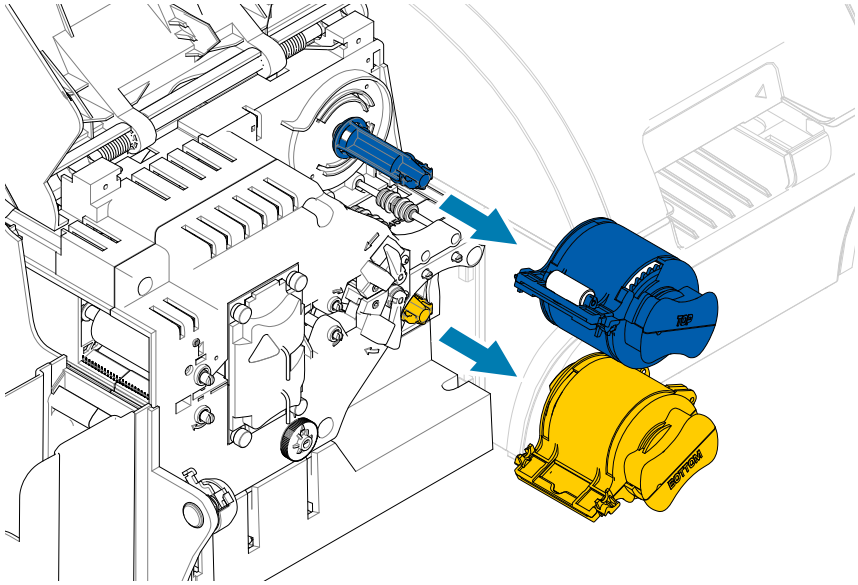

Step 5. Open each cassette by separating its two halves at the hinge—grasp the two halves firmly then pull apart. **DO NOT use tools**.

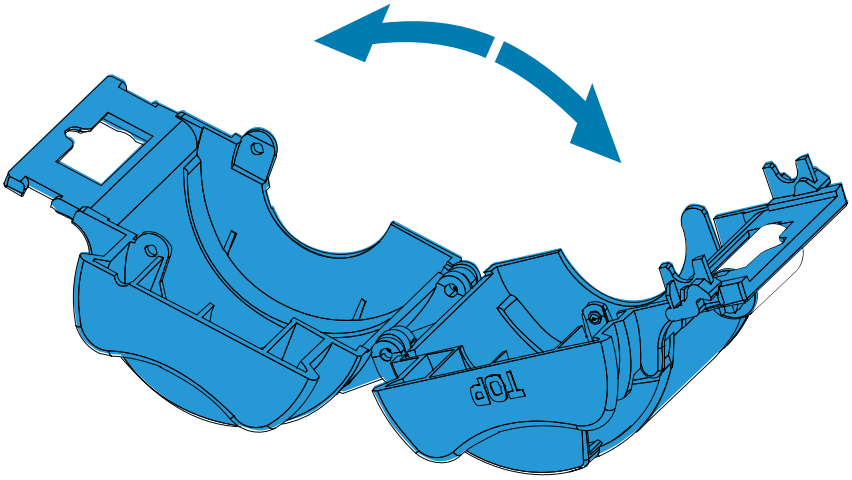

Step 6. If there is an empty laminate core in the cassette, remove it.

Step 7. Proceed to Loading Laminate on page 18.

Using Partial-Width Laminate

Note • Since partial-width laminates are only used for the back (i.e., lower) surface of the card, this section only applies to the double-sided laminator.

Laminates come in three widths:

- Full-Width laminate is 2-inch (51 mm) wide. The full-width laminate is used on the front (i.e., upper) or back (i.e., lower) surface of the card.
- “Partial-Width” laminate is available as 1.33-inch (33 mm) wide (used for cards with a magnetic stripe).

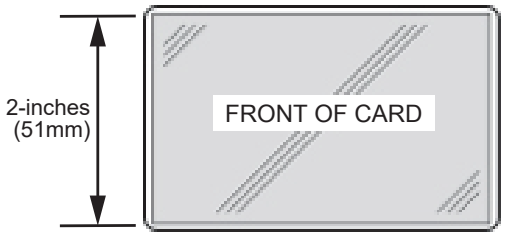

Full Width

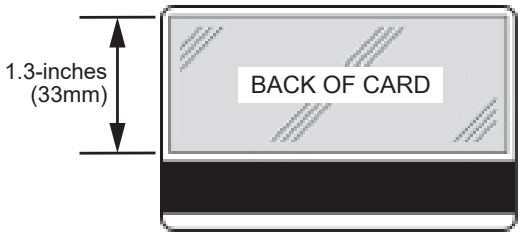

Magnetic Stripe

Step 1. Remove the lower laminate cassette.

Step 2. Open the cassette, and remove the laminate if present.

Step 3. Load the partial-width laminate into the cassette. Note that the collar on the laminate spool is on the end opposite the geared flange and keeps the laminate positioned correctly.

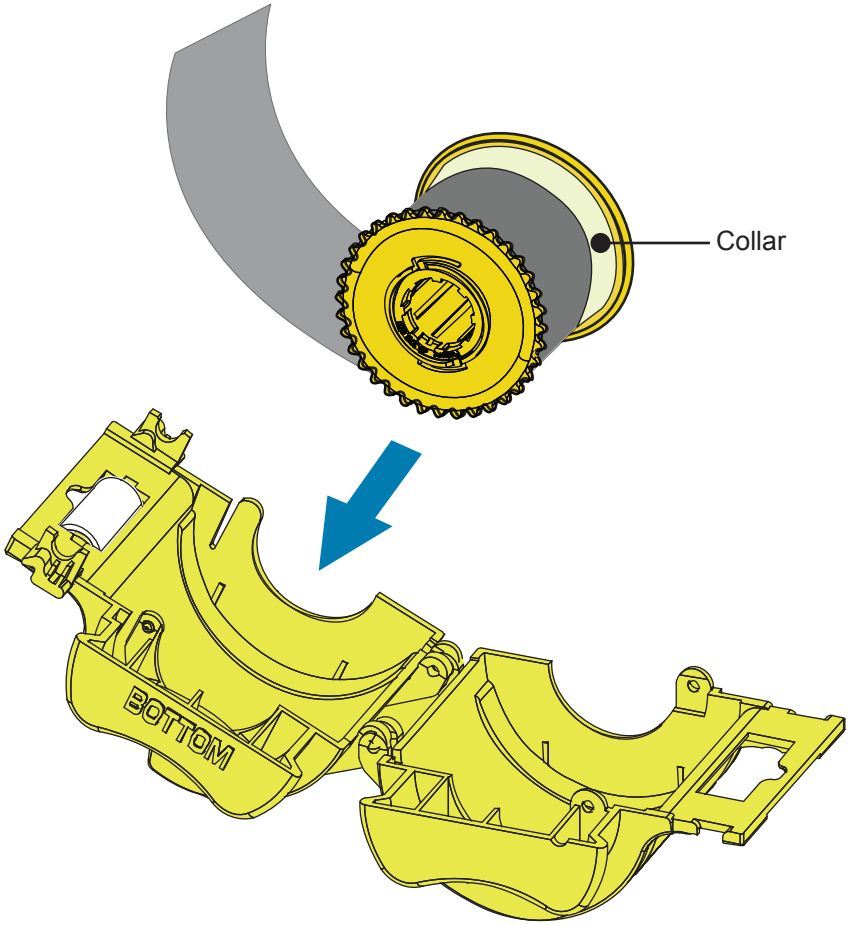

Step 4. Trim the partial-width laminate.

Step 5. Rotate the core to adjust the laminate overhang—stop when the end of the laminate is even with the edge of the cassette.

Step 6. Install the cassette.

Laminating Contact Smart Cards

The laminate for the top surface of a contact smart card has a repeating pattern of an index hole and a rectangular cutout to expose the card's electrical contacts.

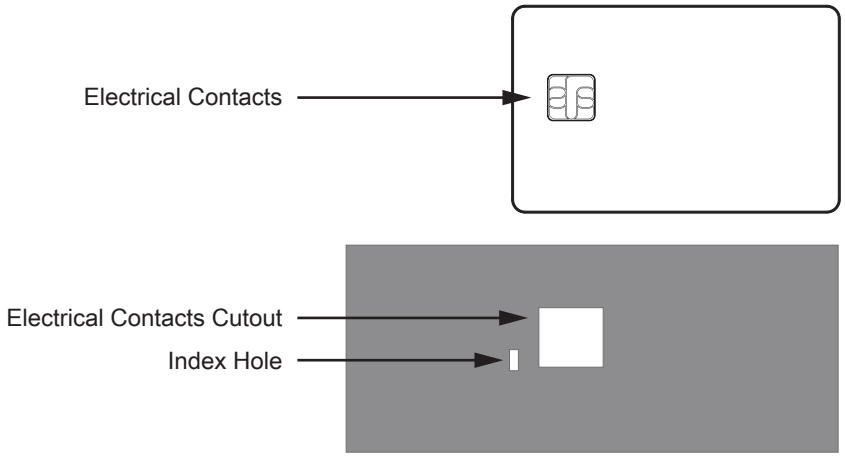

Step 1. Remove the upper laminate cassette.

Step 2. Open the cassette, and remove the laminate if present.

Step 3. Load the smart card laminate into the cassette.

Step 4. Cut the laminate, splitting the index hole as shown.

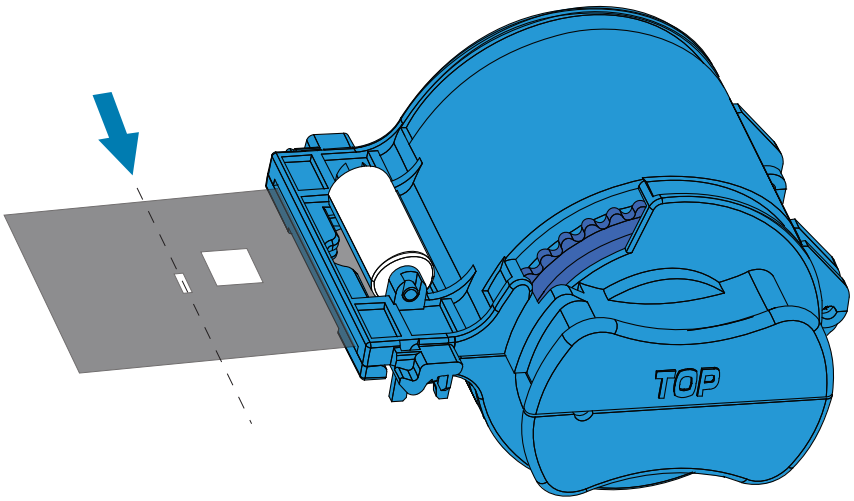

Step 5. Rotate the core to adjust the laminate overhang. Stop when the end of the laminate (not the edge of the index hole) is even with the edge of the lips of the cassette.

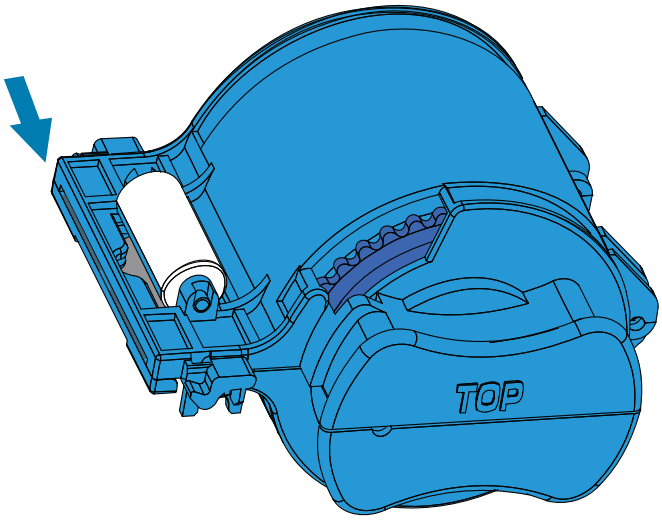

Step 6. Install the cassette—see Installing the Laminate Cassette on page 21.

Plugging in the Printer

Step 1. Insert the female end of the power cord into the printer (as shown in the figure below).

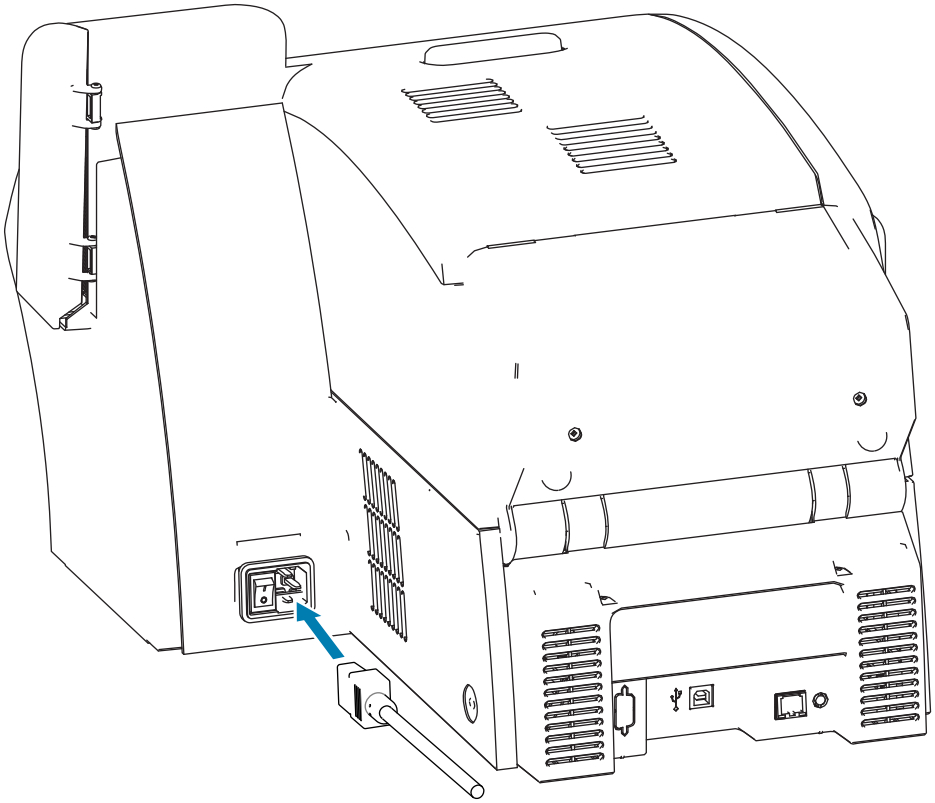

Step 2. Insert the male end of the power cord into the power source as shown (power receptacle configuration may vary).

Connecting a USB Cable

Step 1. Insert the device side of the USB cable into the USB receptacle on the printer (as shown in the figure below).

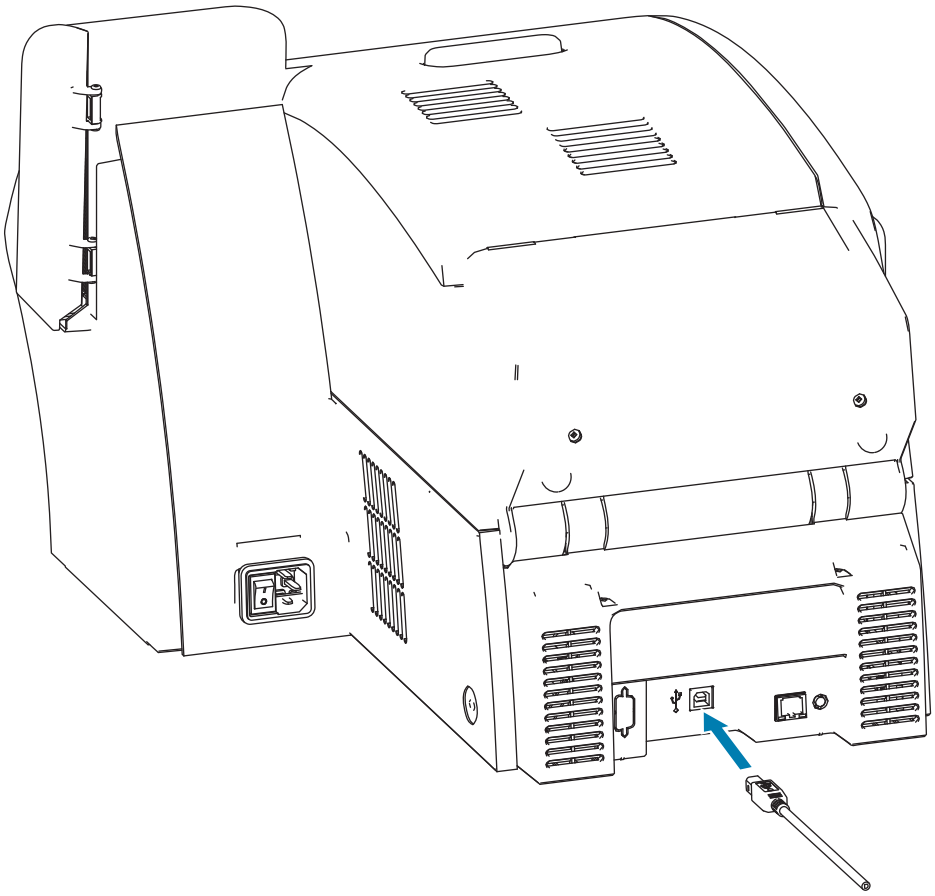

Step 2. Insert the host side of the USB cable into an appropriate host port.

Connecting an Ethernet Cable

Step 1. Insert one end of the Ethernet cable into the Ethernet receptacle on the printer (as shown in the figure below).

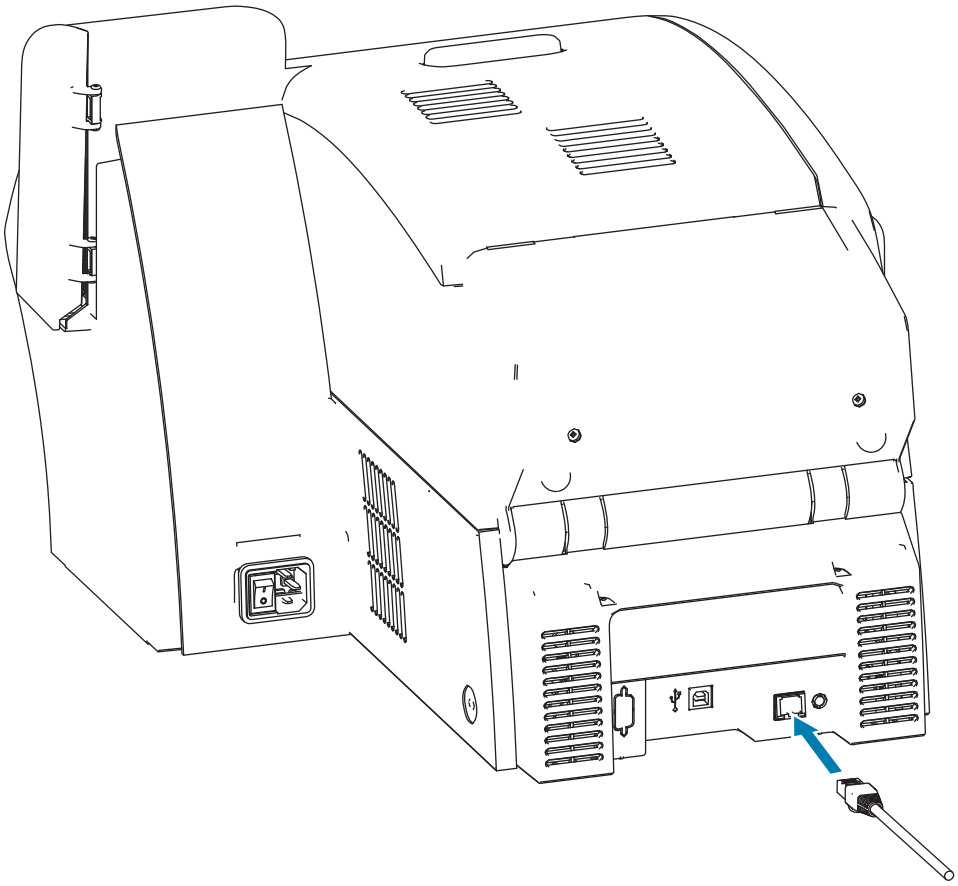

Step 2. Insert the opposite end of the Ethernet cable into an appropriate Host port.

Turning on the Printer

The power switch is located at the rear of the printer next to the power receptacle (as shown in the figure below).

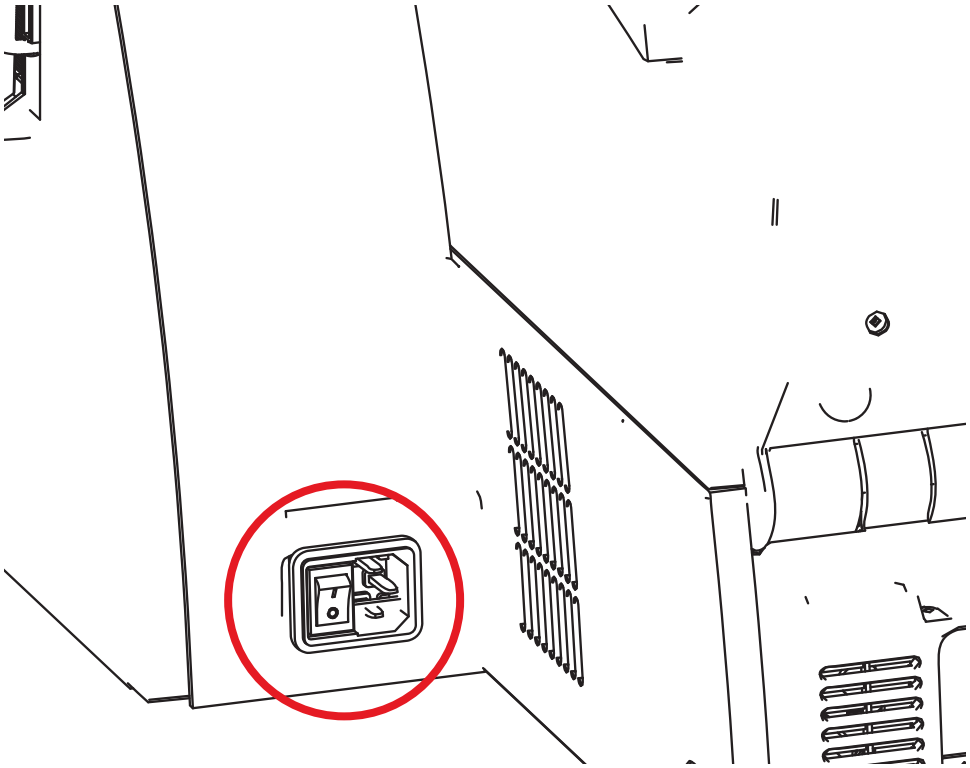

Press the upper portion of the power switch to the ON (|) position.

Press the lower portion of the power switch to the OFF (O) position.

Installing the Software

The CD that comes with the printer contains the latest driver software at the time of shipping.

It is recommended that the latest driver software be downloaded from the ZXP Series 9 support page at www.zebra.com/zxp9-info.

When installing the software, follow the on-screen instructions to install and configure your printer for the desired network.

Supported Operating Systems

Supported Windows Drivers Microsoft OS [1]	One to One	One to Many	Many to One	Many to Many	Printer Pooling [2]
	1 Printer - 1 Host	One Host - Many Printers	Multiple Hosts (Drivers) One Printer	Multiple Hosts (Drivers) - Many Printers	
Server 2016	Yes	Yes	Yes	Yes	Yes
Server 2012	Yes	Yes	Yes	Yes	Yes
Server 2008 (64-bit)	Yes	Yes	Yes	Yes	Yes
Server 2008 (32-bit)	Yes	Yes	Yes	Yes	Yes
Windows 10 (64-bit)	Yes	Yes	Yes	Yes	Yes
Windows 10 (32-bit) [3]	Yes	Yes	Yes	Yes	Yes
Windows 8 (32-bit) [4]	Yes	Yes	Yes	Yes	Yes
Windows 8 (64-bit)	Yes	Yes	Yes	Yes	Yes
Windows 7 (64-bit)	Yes	Yes	Yes	Yes	Yes
Windows 7 (32-bit)	Yes	Yes	Yes	Yes	Yes

1. Driver installed on individual Client PC
2. Printer Pooling Sharing not supported.
3. Windows 10 Home and Pro only (No support for Windows 10 Mobile)
4. No support for Win 8 Metro GUI print driver environment.

Supported Sharing Combinations

Windows OS Server (Driver Host)	Windows OS (Driver Clients)					
	Win 10 (32 bit)	Win 10 (64 bit)	Win 8 (32 bit)	Win 8 (64 bit)	Win 7 (32 bit)	Win 7 (64 bit)
Server 2016	Yes	Yes	Yes	Yes	Yes	Yes
Server 2012	Yes	Yes	Yes	Yes	Yes	Yes
Server 2008 (64-bit)	Yes	Yes	Yes	Yes	Yes	Yes
Server 2008 (32-bit)	Yes	Yes	Yes	Yes	Yes	Yes
Windows 10 (64-bit)	Yes	Yes	Yes	Yes	Yes	Yes
Windows 10 (32-bit)	Yes	No	Yes	No	Yes	No
Windows 8 (64-bit)	Yes	Yes	Yes	Yes	Yes	Yes
Windows 8 (32-bit)	Yes	No	Yes	No	Yes	No
Windows 7 (64-bit)	Yes	Yes	No	No	Yes	Yes
Windows 7 (32-bit)	Yes	No	No	No	Yes	No

Packing for Shipment

If the printer is to be shipped, it is important to use the original packing and shipping material to prevent damage to the printer.

If the original material is lost, a replacement shipping kit can be ordered from Zebra. Go to the ZXP Series 9 support page at www.zebra.com/zxp9-info for more details.

Printer

Note • The specifics of the shipment and the printer condition may influence which of the following steps are followed; common sense should prevail.

Step 1. Ensure the printer power is set to the off (○) position.

Step 2. Disconnect the power cable from the power source, then from the rear of the printer.

Step 3. Disconnect the USB cable from the host computer, then from the rear of the printer; or disconnect the Ethernet cable from the network source, then from the rear of the printer.

Step 4. Remove any cards from the input and output hoppers—place the hoppers into the foam insert.

Step 5. Open the printer door.

Step 6. Remove the print ribbon and transfer film (if you wish to save the print ribbon and film for future use, you may want to put them in a plastic bag for storage).

Step 7. Remove the card cleaning cartridge and card cleaning roller—place them in the foam insert.

Step 8. Close the printer door.

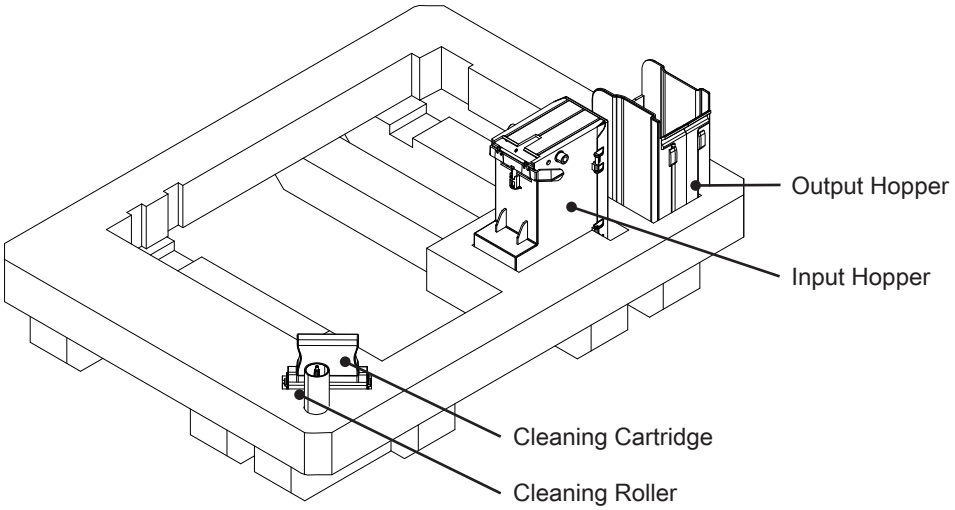

Step 9. Place the printer in its protective bag.

Step 10. Place the lower foam insert with the accessories into the shipping carton.

Caution • The printer weighs approximately 27.5 lbs (12.5 kg). Two people may be necessary to lift the printer.

Step 11. Carefully place the printer into the recess in the lower foam insert (shown out of box for clarity).

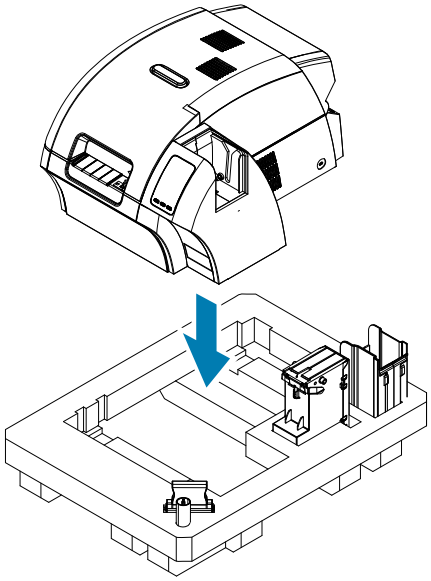

Step 12. Place the upper foam insert onto the printer, and gently press it down so it makes a snug fit on the printer—the top of the upper foam insert should be even with the upper edge of the shipping carton.

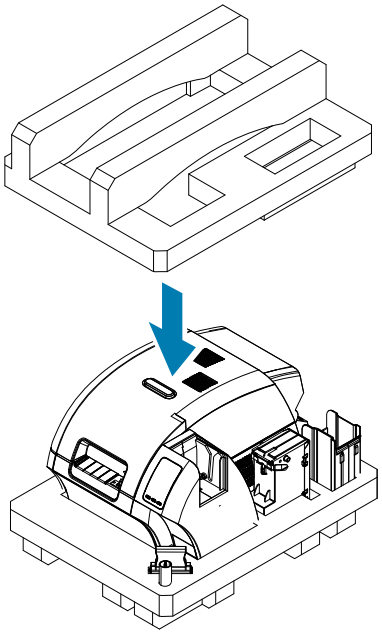

Step 13. Roll up the power cord and USB cable and place them in the recess of the upper foam insert.

Step 14. Close the shipping carton and tape it securely.

Printer with Laminator

Step 1. Ensure the printer power is set to the off (○) position.

Step 2. Disconnect the power cable from the power source, then from the rear of the printer.

Step 3. Disconnect the USB cable from the host computer, then from the rear of the printer; or disconnect the Ethernet cable from the network source, then from the rear of the printer.

Step 4. Remove any cards from the Input and output hoppers—place the hoppers into the lower foam insert.

Step 5. Open the printer door.

Step 6. Remove the print ribbon and transfer film (if you wish to save the print ribbon and film for future use, you may want to put them in a plastic bag for storage).

Step 7. Remove the card cleaning cartridge and card cleaning roller—place them in the foam insert.

Step 8. Close the printer door.

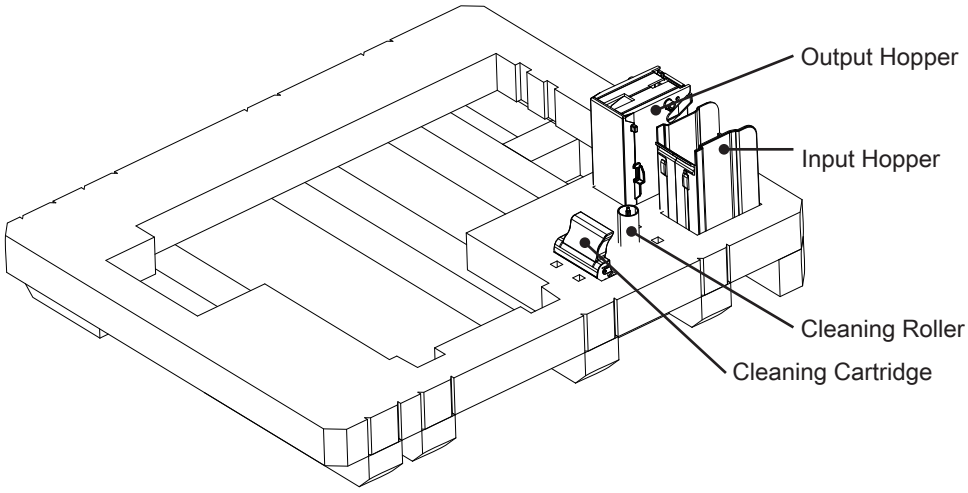

Step 9. Open the laminator door.

Step 10. Place the lower foam insert with the accessories into the shipping carton.

Step 11. Remove the laminate cassette(s)—any unused laminate can remain in the cassette(s)—and place the cassette(s) into the upper foam insert from the underside.

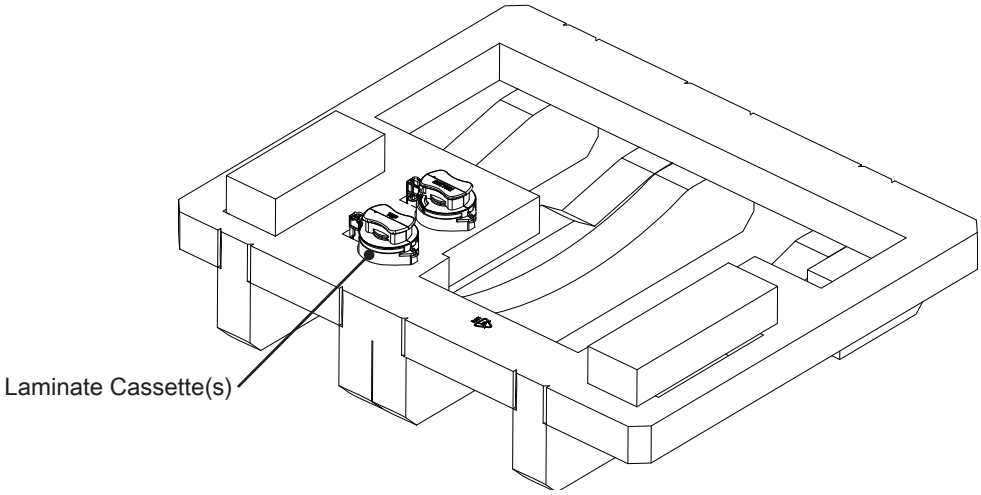

Step 12. Close the laminator door.

Step 13. Place the unit in its protective bag.

Caution • The printer weighs approximately 44 lbs (20 kg). Use two people to lower it into the shipping carton.

Step 14. With two people, carefully lift and place the unit into the recess in the lower foam insert.

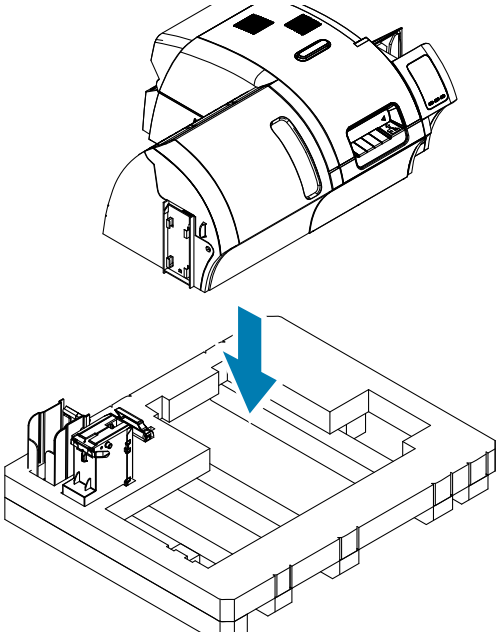

Step 15. Place the two corner blocks on top of the right front and left front corners of the lower foam insert.

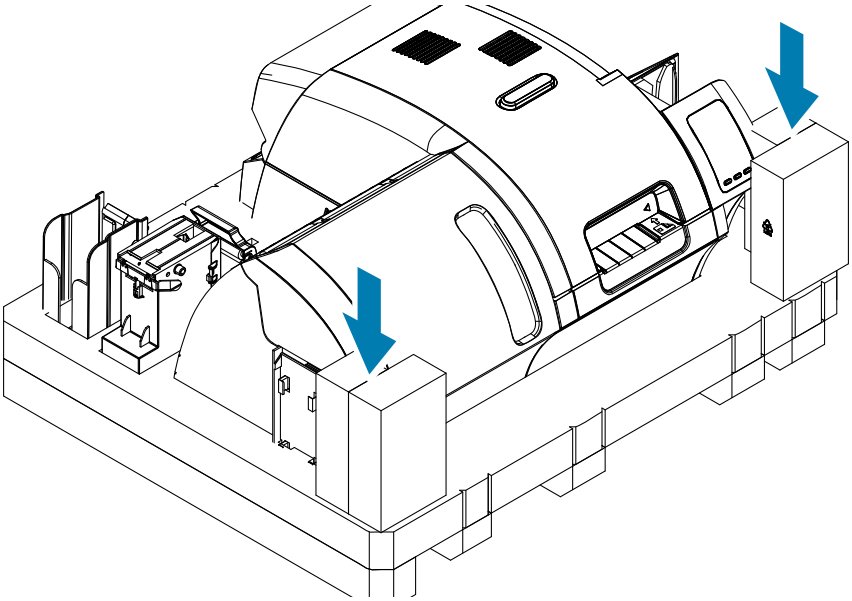

Step 16. Place the upper foam insert onto the unit, and gently press it down so it makes a snug fit on the unit—the top of the upper foam insert should be even with the upper edge of the carton.

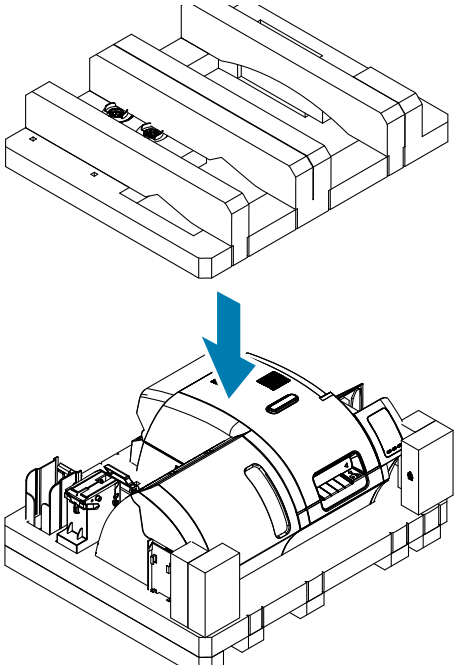

Step 17. Roll up the power cord and USB cable and place them in the recess of the upper foam insert.

Step 18. Close the shipping carton.

Step 19. Tape the shipping carton securely.

Operation

Introduction

Printing with the ZXP Series 9 is similar to printing with any other printer in a Windows environment:

- The printer is connected to either a host computer (via USB), or to a network (via Ethernet).
- The printer is selected by either the operating system or the appropriate software application.
- Printer properties are set via the printer driver (although the factory default values will be appropriate for many applications).

Printing Preferences

The Printing Preferences Control panel can be used to determine preferences such as which ribbon panels will be used to print images on the card, what card type will be used, where the card comes from (i.e., the input hopper or the manual feed slot) and its destination. It is also used to make adjustments to colors and black panel quality.

The following tabs are included in the Printing Preferences Control Panel:

- Card Setup Tab
- Encoding Tab
- Black Panel (K) Optimization Tab
- Color (YMC) Optimization Tab
- About Tab

The **Restore Defaults** button sets the printing preferences back to factory settings.

The **OK** button applies the settings and closes the Printing Preferences Control Panel.

The **Cancel** button closes the Printing Preferences Control Panel without applying the changes made.

The **Apply** button makes (or applies) the changes. The Printing Preferences Control panel remains open.

The **Help** button shows this help content.

To open the Printing Preferences Control Panel:

- Windows 7: Select Start > Devices and Printers, right click the ZXP Series 9 Card Printer, and select **Printing preferences** from the pop-up menu.
- Windows 8: Right-click the screen's bottom-left corner (or press Windows+I) and choose Control Panel from the pop-up menu, right click the ZXP Series 9 Card Printer, and select **Printing preferences** from the pop-up menu.
- Windows 10: Select the Start menu and then select Settings > Devices, right click the ZXP Series 9 Card Printer, and select **Printing preferences** from the pop-up menu.

Card Type Selection

The Printing Preferences Control Panel enables you to specify the card type in use. Based on your selection, the printer makes adjustments for optimum print quality.

Step 1. Open the Printing Preferences Control Panel—see Network Operations on page 99.

Step 2. From the Card Setup tab, click the **Card type in use** drop-down menu and select the appropriate card type (circled below). Supported card types are:

- PVC, Standard
- PVC, Mag Stripe
- PVC, Contactless SC
- PVC, Contact SC
- Composite, Standard
- Composite, Mag Stripe

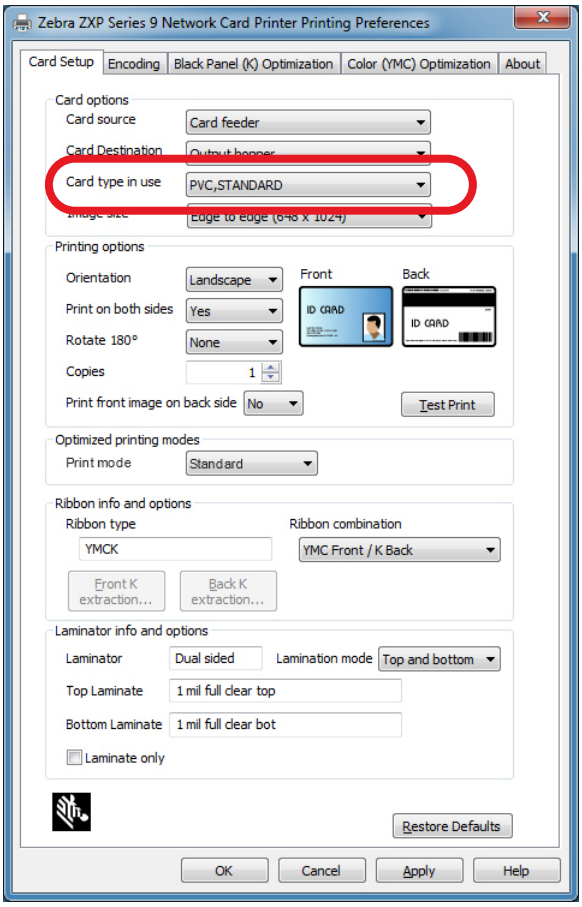

If your card type is not listed in the drop-down menu, select Custom and fill out the Card Specifications pop-up screen—see Network Operations on page 99 for details.

For help setting the custom card specifications, see Setting Custom Card Specifications on page 111.

Step 3. Click **Apply** and then click **OK**.

Print Ribbon Selection

A variety of ribbons are available for use with the ZXP Series 9 Card Printer.

For example, the YMC ribbon prints yellow (Y), magenta (M), and cyan (C) on the front and the back (if the printer is double-sided). The YMCK ribbon prints yellow, magenta, and cyan on the front of the card, and black on the back of the card (if the printer is double-sided).

The YMCKI ribbon is for use with mag stripe cards, and will print yellow, magenta, and cyan on the front of the card, and black on the lower half of the back—avoiding printing over the mag stripe.

The YMCUvK ribbon adds a layer of ultra-violet (Uv) to print invisible images (text or graphics) that will glow in the visible spectrum when exposed to a Uv light.

The printer will recognize the type of print ribbon installed and display it in the **Ribbon type** field of the Printing Preferences Control Panel Card Setup tab, and (as shown in the following figure) will make available the ribbon combinations from the **Ribbon combinations** drop-down menu. Additionally, selecting Yes or No (double- or single-sided, respectively) from the **Print on both sides** drop-down list will affect the available ribbon combinations.

The table below shows the supported print ribbons and their respective combinations for single- and double-sided printing.

Ribbon	Print on both sides	Ribbon Combinations
YMCK	No	YMCK
	Yes	YMC Front / K Back
		YMCK Front / YMCK Back
YMCKK	No	YMCK Front
	Yes	YMCK Front / K Back
		YMCK Front / YMCK Back
YMCKI	No	YMCKI Front
	Yes	YMC Front / KI Back
		YMCI Front / K Back
		YMCKI Front / YMCKI Back
YMCKKI	No	YMCKI Front
	Yes	YMCK Front / KI Back
		YMCKI Front / K Back
		YMCKI Front / YMCKI Back
YMCUvK	No	YMCUvK Front
	Yes	YMCUv Front / K Back
		YMC Front / UvK Back
		YMCUvK Front / YMCUvK Back
YMC	No	YMC Front
	Yes	YMC Front / YMC Back
K (Monochrome)	No	K Front
	Yes	K Front / K Back

Step 1. Open the Printing Preferences Control Panel—see Network Operations on page 99.

Step 2. From the Card Setup tab, click the **Ribbon combination** drop-down menu and make the appropriate selection (circled below).

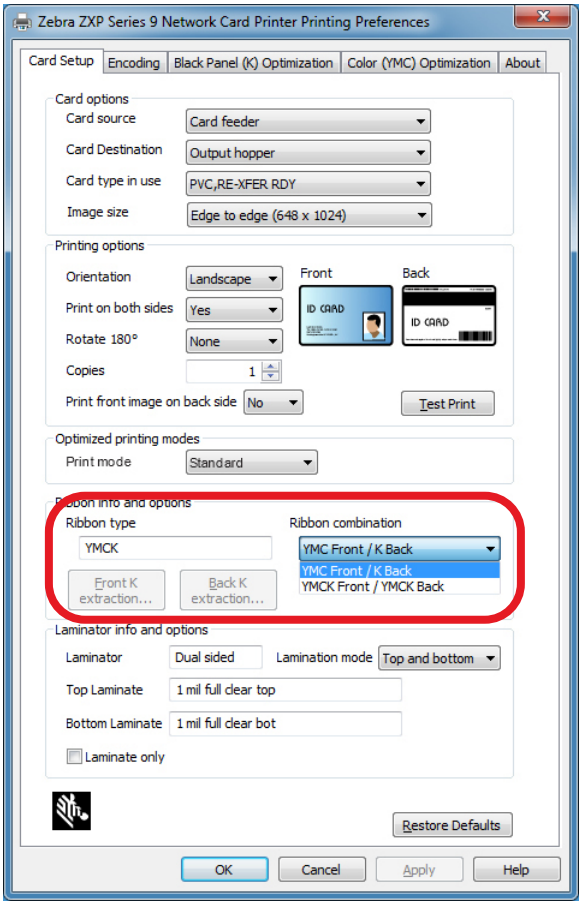

In the example above, the available ribbon combinations for the installed YMCK ribbon are YMC on the front of the card, and K on the back of the card; or YMCK on both the front and back of the card. The available Ribbon combinations is also dependent on if printing is set to single- or double sided.

Printing a Test Card

The Printing Preferences Control Panel has the option for printing a test card. This is a simple device to ensure the printer is working properly, and to check the quality of the print. The test card is printed according to the settings in the Card Setup tab.

Step 1. Open the Printing Preferences Control Panel—see Network Operations on page 99.

Step 2. From the Card Setup tab, adjust the Card Options, Printing Options, etc., to suit your preferences.

Step 3. Click **Test Print** (circled below).

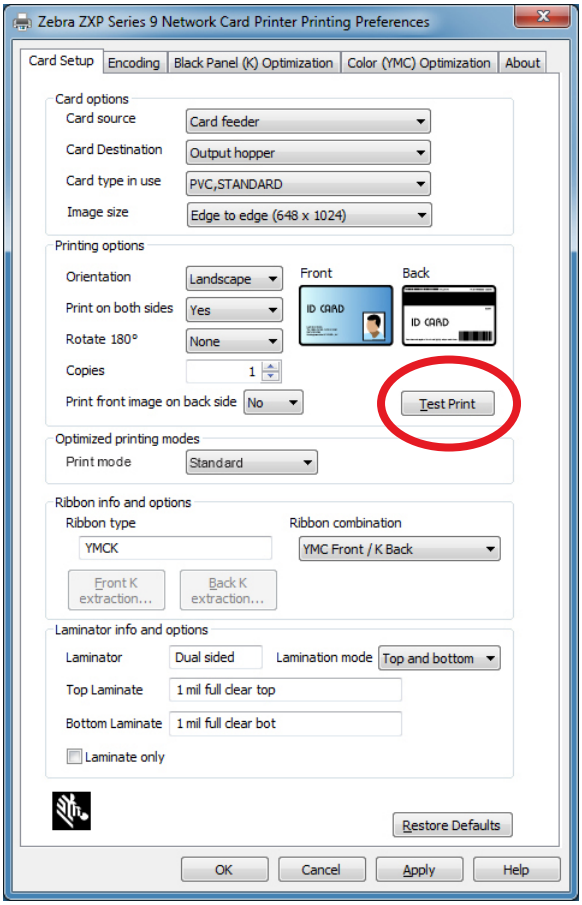

An enhanced test print feature is also available from the ZXP Toolbox. This feature offers a wider range of test cards to showcase the quality of print from the ZXP Series 9 The test card is printed according to the settings in the Card Setup tab.

To print a test card from the ZXP Toolbox:

Step 1. Open the Printer Properties control panel:

- Windows 7: Select Start > Devices and Printers, right click the ZXP Series 9 Card Printer, and select **Printer Properties** from the pop-up menu.
- Windows 8: Right-click the screen's bottom-left corner (or press Windows+I) and choose Control Panel from the pop-up menu, right click the ZXP Series 9 Card Printer, and select **Printer Properties** from the pop-up menu.
- Windows 10: Select the Start menu and then select Settings > Devices, right click the ZXP Series 9 Card Printer, and select **Printer Properties** from the pop-up menu.

Step 2. Select the Device Information tab and click the **ZXP Toolbox** button.

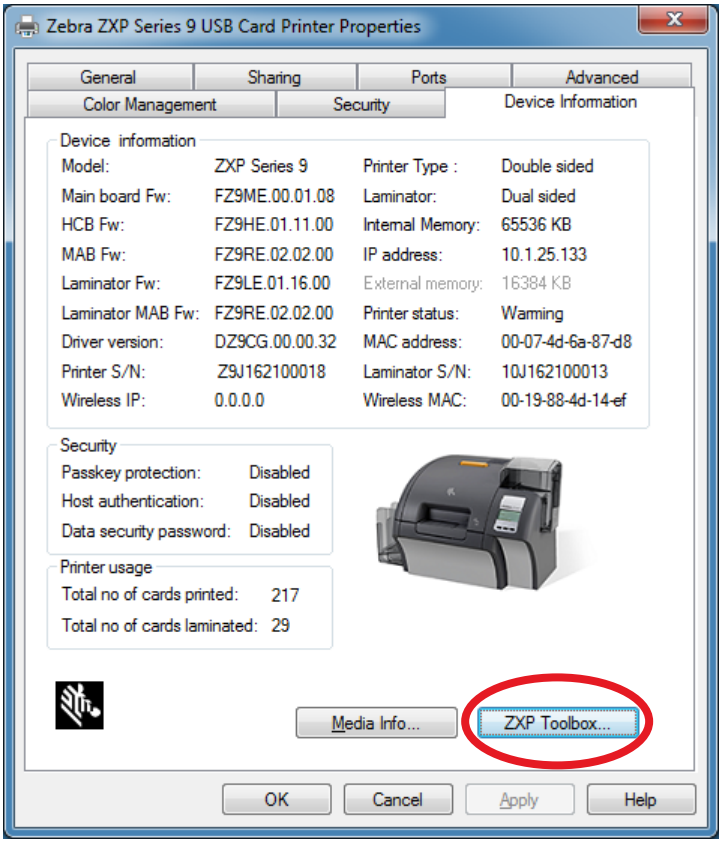

Step 3. Select the **Tools & Utilities** page (the Test Cards menu is displayed by default).

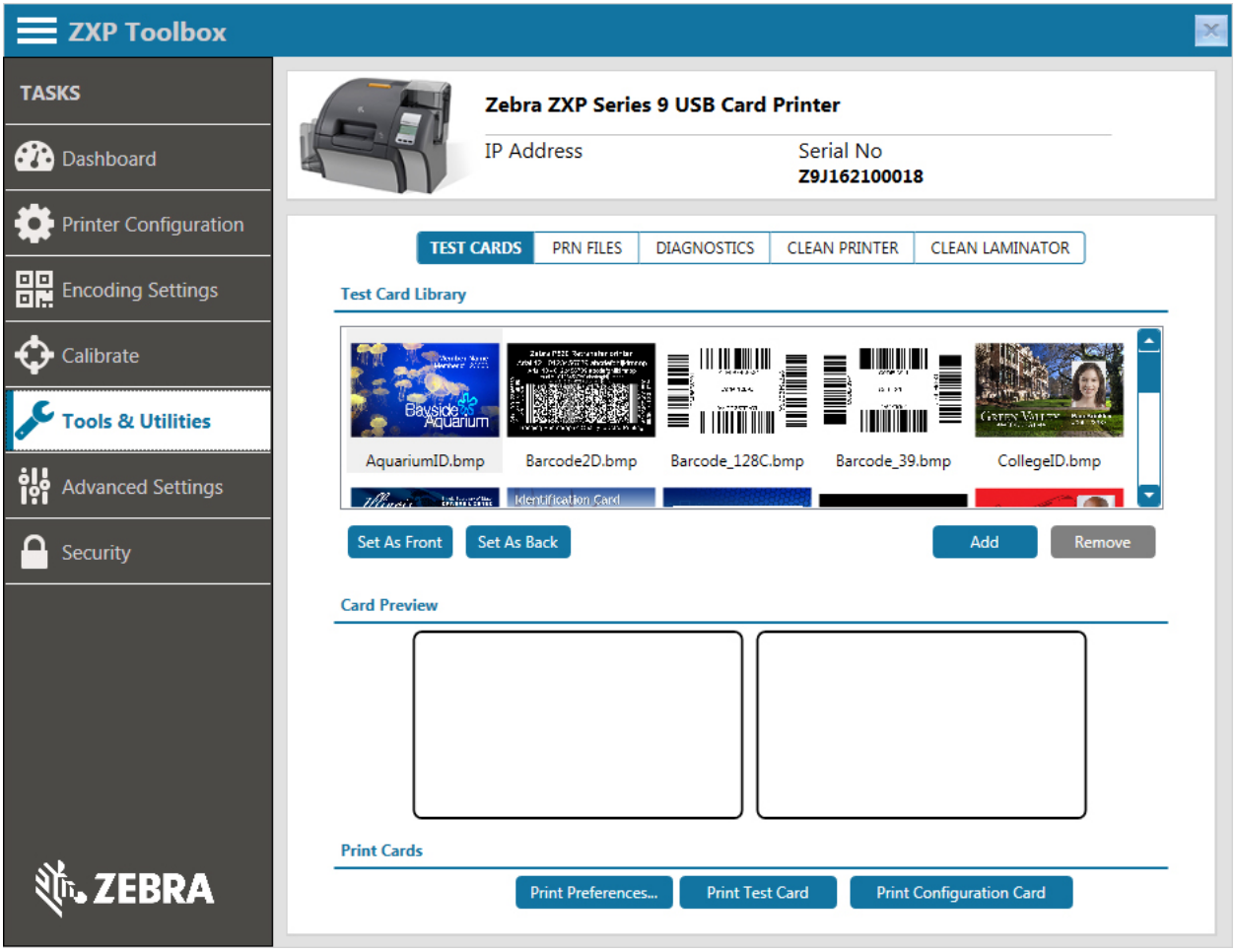

Step 4. Select an image from the Test Card Library and click either **Set as Front** or **Set as Back** to set the front and back of the test card; or you can add your own images to the library and use them for the test card.

Step 5. When the front and the back images are set, click **Print Test Cards**.

Manual Card Feed

A manual feed slot is available for feeding single cards. Note that this option works with cards in the input hopper.

Step 1. Open the Printing Preferences Control Panel—see Network Operations on page 99.

Step 2. From the Card Setup tab, click the **Card source** drop-down menu and select **Manual Feed** (circled below).

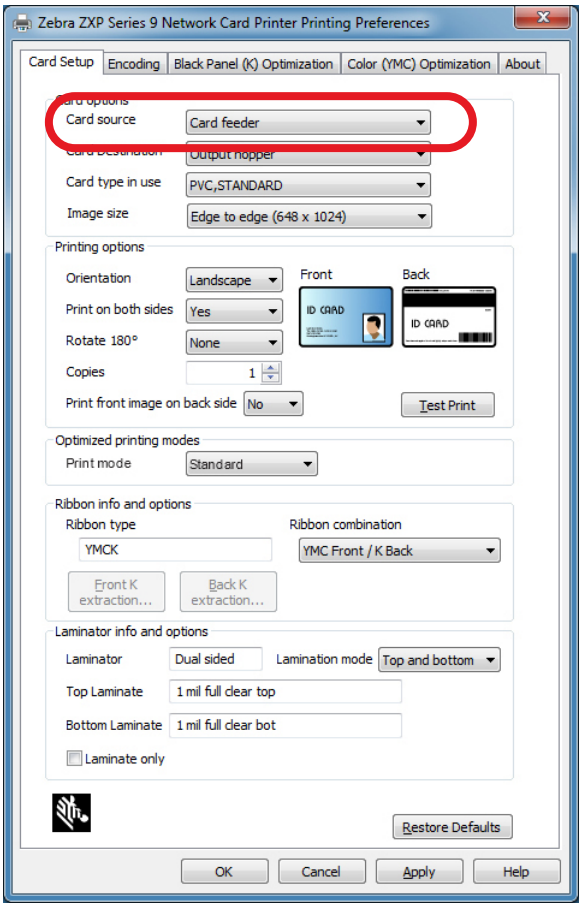

Step 3. Click **Apply**.

Step 4. Send the print job to the printer. When ready, the printer OCP will prompt you to insert the card.

Step 5. Insert a single card into the slot in the correct orientation. Do not feed more than one card at a time.

Caution • DO NOT bend cards, and refrain from touching print surfaces as much as possible as this can reduce print quality. The surface of the cards must remain clean and dust free. Always store cards in an enclosed container. Ideally, use cards as soon as possible.

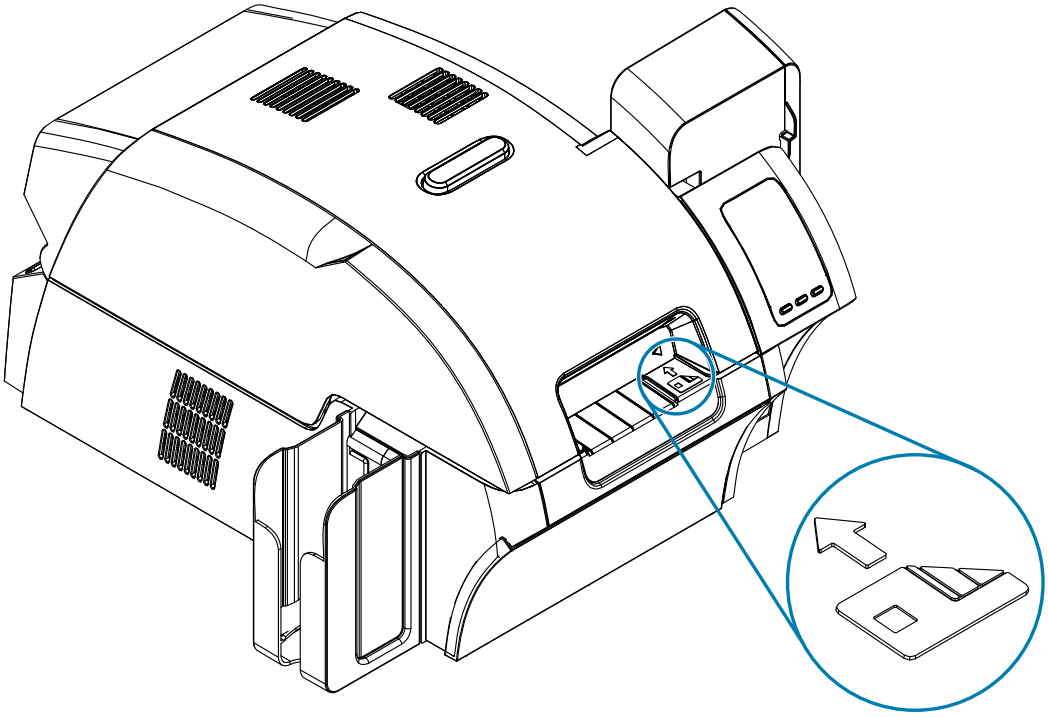

Step 6. The printer will feed in the card and start printing.

Step 7. Once the printing job is complete, the card is ejected from the printer into the output hopper.

Operator Control Panel (OCP)

The printer is equipped with an OCP display and three OCP buttons which give access to the printer menus.

- Press the MENU button to access the Main Menu.
- Press the INFO button to access and view the printer information pages.
- Press the PRINT button to print the last card stored in memory.

Printer Menu Information

Info Menu

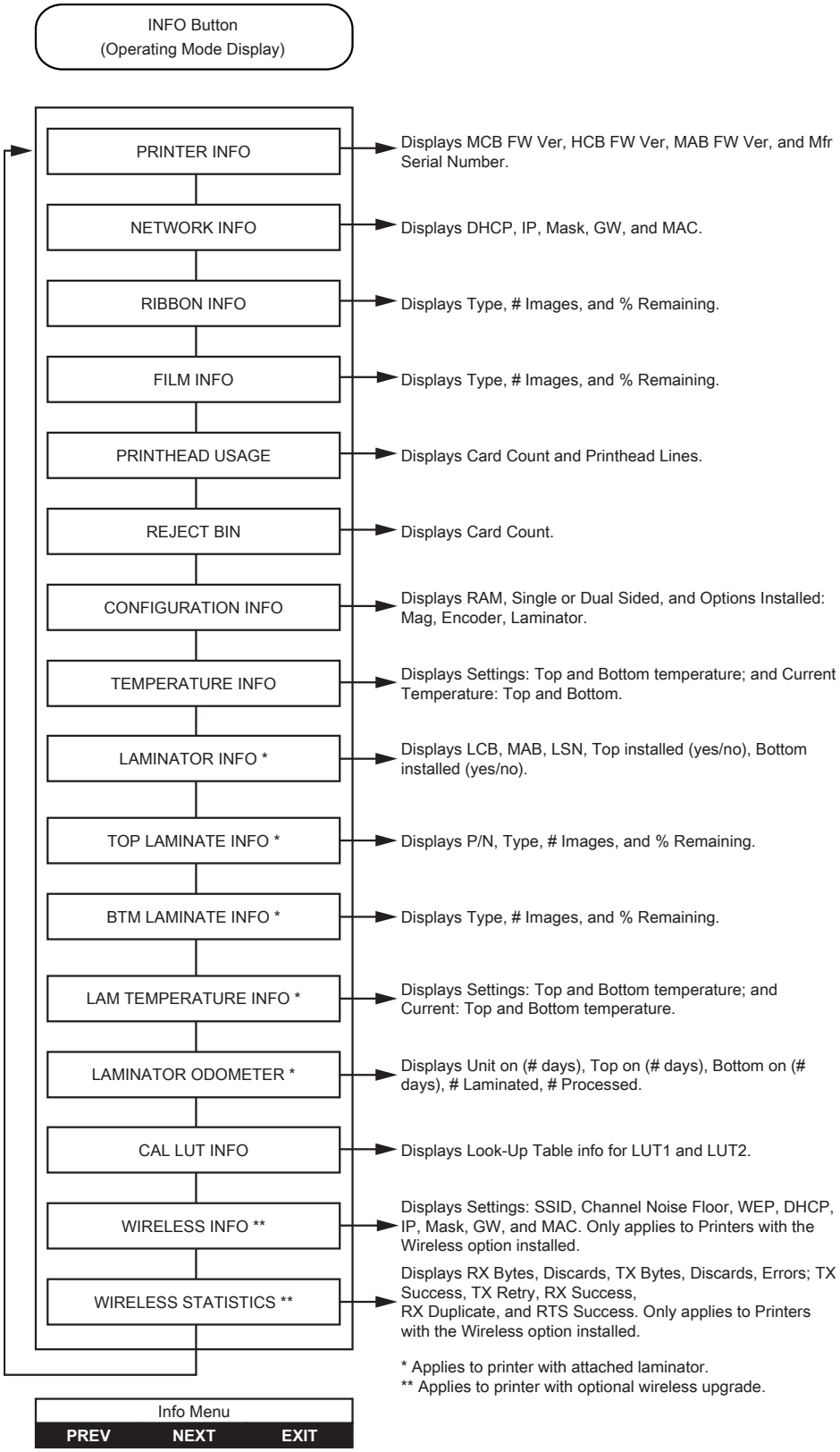

Main Menu

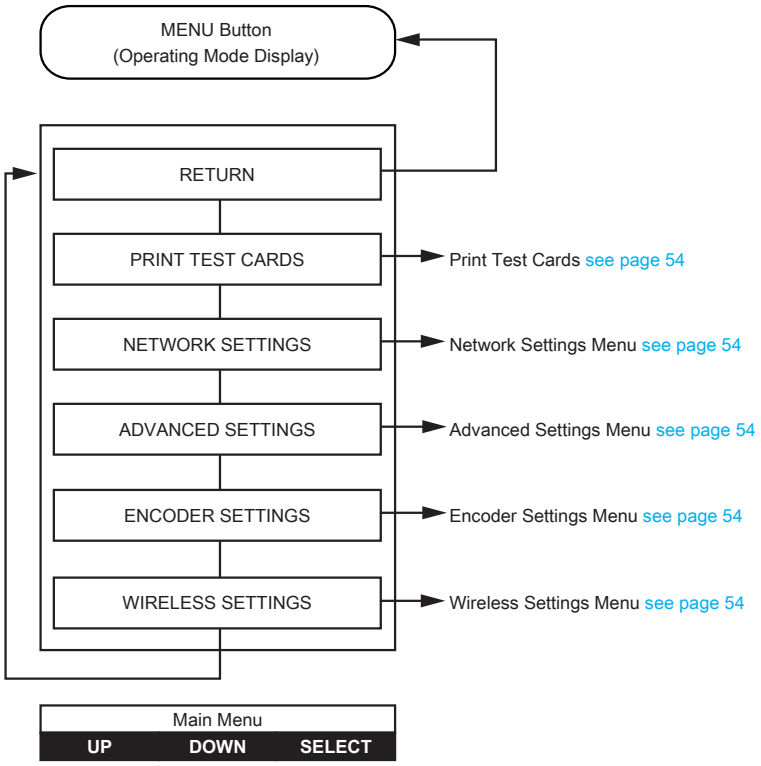
MENU Button
(Operating Mode Display)
RETURN
PRINT TEST CARDS
NETWORK SETTINGS
ADVANCED SETTINGS
ENCODER SETTINGS
WIRELESS SETTINGS
Print Test Cards see page 54
Network Settings Menu see page 54
Advanced Settings Menu see page 54
Encoder Settings Menu see page 54
Wireless Settings Menu see page 54
Main Menu
UP
DOWN
SELECT

Print Test Cards Menu

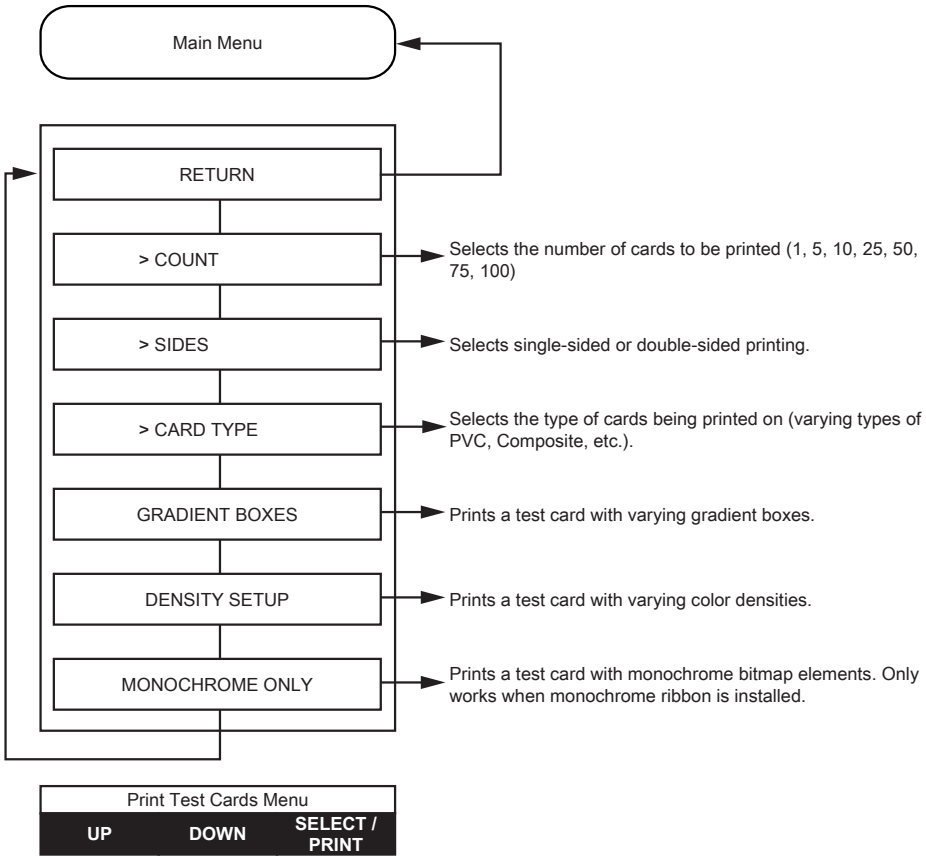

Network Settings Menu

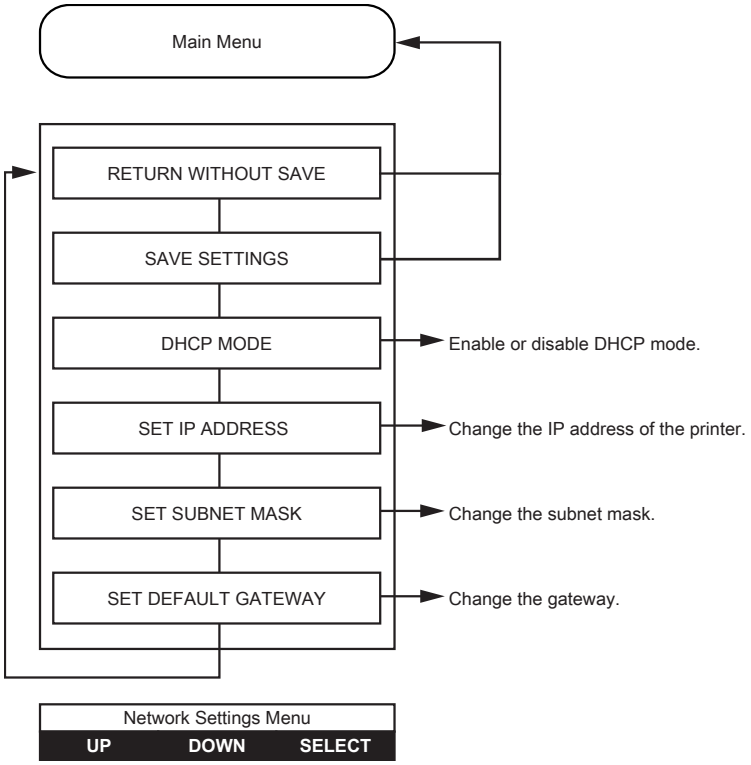

Advanced Settings Menu

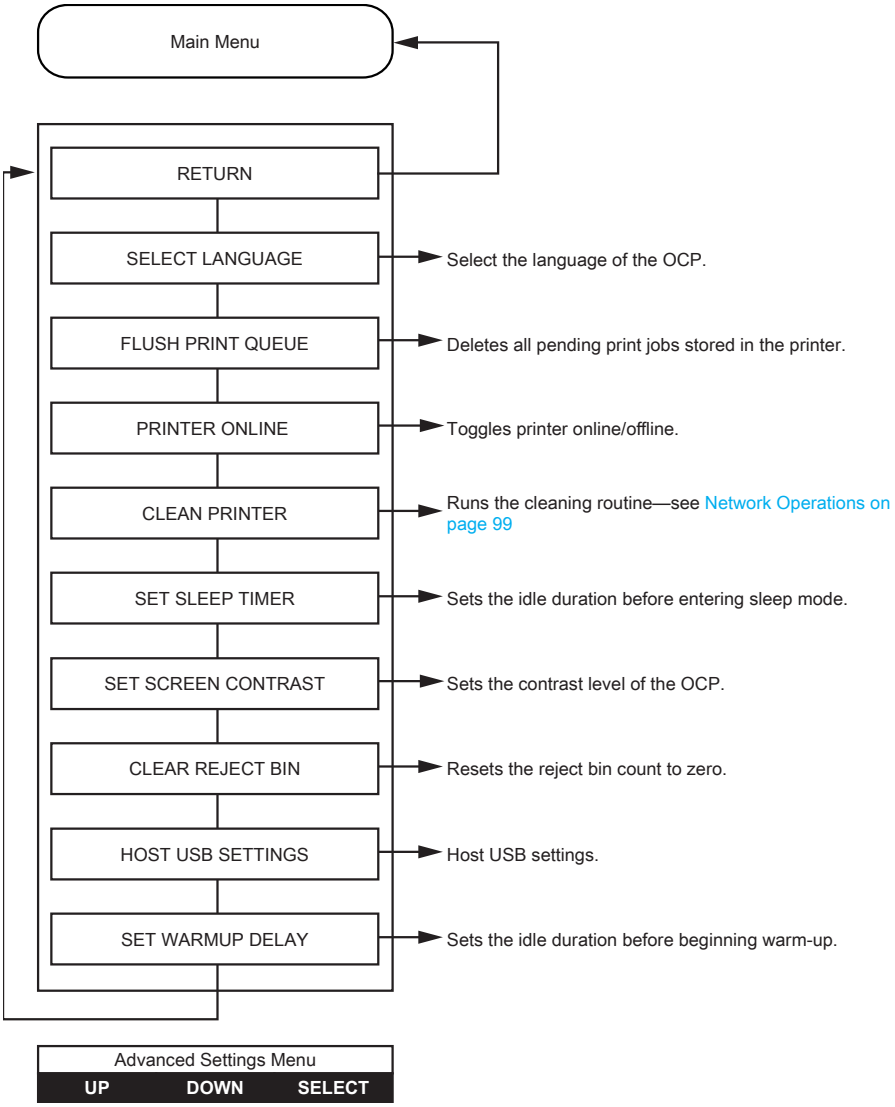

Encoder Settings Menu

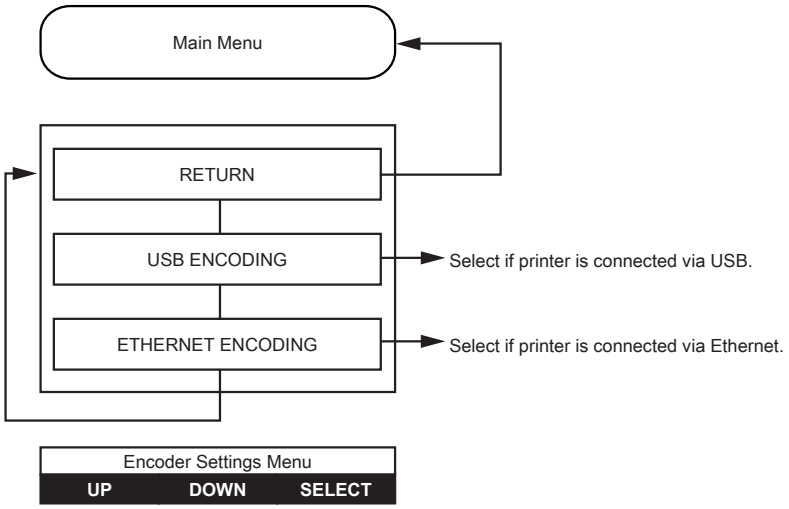

Clean Printer Menu

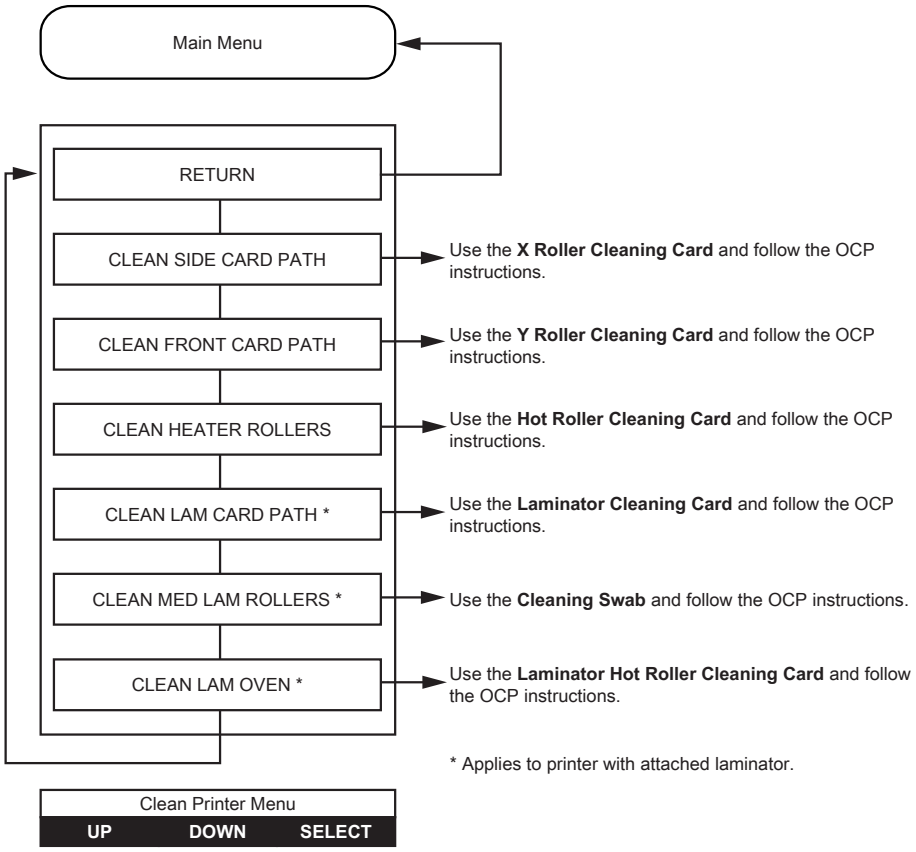

Wireless Settings Menu

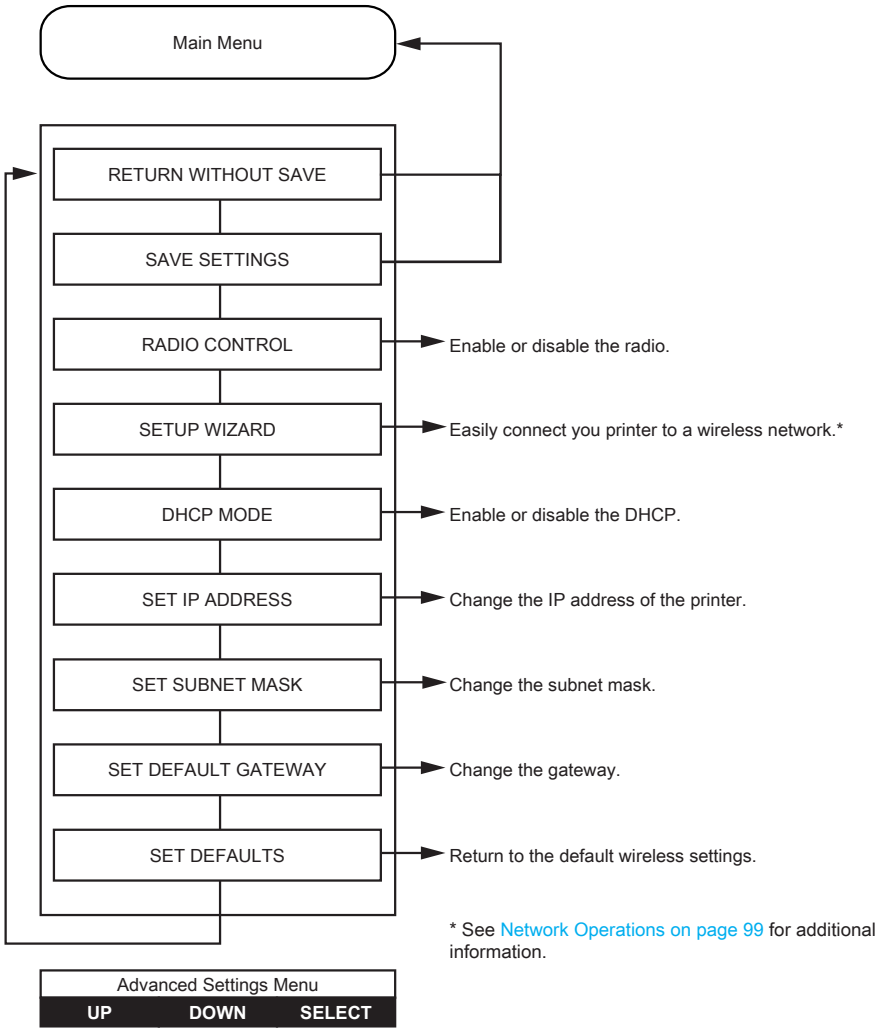

* See Network Operations on page 99 for additional information.

Messages

Operational

Operational messages are displayed during normal operation.

Message	Description
ALARM	An error message needs to be cleared before normal operations can resume.
CANCELING	The Cancel button was pressed, and the current operation is being terminated.
CONFIG DATA	Configuration data is being transferred from the computer to the printer.
CONTACT OPERATION	Contact Smart Card is being encoded; i.e., the card is in position and data is being transferred.
CONTACTLESS OPERATION	Contactless Smart Card is being encoded; i.e., the card is in position and data is being transferred.
COOLING	Ready to accept a print job, rollers cooling; e.g., when switching from 2-sided printing to 1-sided printing.
COOLING PRINT JOB WAITING	Print job received, cooling rollers to temperature.
COOLING PRINTHEAD TEMPERATURE	Cooling printhead to temperature.
COOLING WAITING TO LAMINATE	Print job completed, laminator cooling to temperature.
DIAGNOSTIC	Diagnostic testing in progress.
JOB DATA	Data is being transferred from the computer to the printer.
LAMINATING	Print job received, laminating in process.
MAG OPERATION	A Magnetic Stripe Card is being encoded; i.e., card is in position and data is being transferred.
MANUALLY INSERT CARD FROM FRONT	Waiting for manual card feed.
OFFLINE	Status toggled (offline/online) via the OCP Advanced Settings Menu.
PRINTING	Print job received, printing in process.
READY	Ready and at temperature.
STANDBY	Printer is in “sleep” mode; i.e., power save mode.
WAIT INITIALIZING	Performing a self test on startup.
WARMING	Ready to accept a print job, rollers heating; e.g., at startup or when switching from 1-sided printing to 2-sided printing.
WARMING PRINT JOB WAITING	Print job received, warming rollers to temperature.
WARMING	
WAITING TO LAMINATE	Ready to accept a print job, laminator warming; e.g., when switching from 1-sided laminating to 2-sided laminating.
WARMING PRINTHEAD TEMPERATURE	Warming printhead to temperature.
WARNING	Indicates that additional OCP instructions need to be performed; e.g., PRINT RIBBON LOW, etc.

Warning Messages

Warnings alert the operator to action that should be taken—the printer will generally continue operation.

Warning Message	Description
BOTH LAMINATES LOW	Indicates that the Top Laminate cassette and the Bottom Laminate cassette are low.
BOTTOM LAMINATE LOW	Indicates that the Bottom Laminate cassette is low—see Network Operations on page 99.
CLEAN FEEDER	Indicates that the Feeder needs cleaning.
CLEAN FRONT CARD PATH	Indicates that the Front Card Path (Y-Drive Rollers) needs cleaning—see Network Operations on page 99.
CLEAN LAM CARD PATH	Indicates that the Laminator Card Path needs cleaning—see Network Operations on page 99.
CLEAN LAM MED ROLLERS	Indicates that the Laminator Media Feed Rollers need cleaning—see Network Operations on page 99.
CLEAN LAM OVEN	Indicates that the Laminator Transfer Path (Heated Rollers) needs cleaning—see Network Operations on page 99.
CLEAN SIDE CARD PATH	Indicates that the Side Card Path (X-Drive Rollers) needs cleaning—see Network Operations on page 99.
CLEAN TRANSFER PATH	Indicates that the Transfer Path (Heated Rollers) needs cleaning—see Network Operations on page 99.
PRINT RIBBON LOW	Indicates that the Print Ribbon spool is low—see Network Operations on page 99.
TOP LAMINATE LOW	Indicates that the Top Laminate cassette is low—see Network Operations on page 99.
TRANSFER FILM LOW	Indicates that the Transfer Film spool is low—see Network Operations on page 99.

Error Messages

Errors are displayed when a situation causes the printer to stop operating. Depending on the cause of the error message, restarting the printer or clearing the displayed error may return the printer to operational status; or the printer may require troubleshooting and repair.

See Network Operations on page 99 for a list of the error messages, possible causes, and possible solutions.

Maintenance

Caution • PROTECT YOUR FACTORY WARRANTY!

The recommended maintenance procedures must be performed to maintain the factory warranty. Other than the recommended cleaning procedures described in this manual, allow only Zebra authorized technicians to service the Printer.

NEVER loosen, tighten, adjust, or bend, etc., a part or cable inside the printer.

NEVER use a high-pressure air compressor to remove particles from the printer.

Cleaning the Printer

The regular use of cleaning cards will clean and maintain important parts of your printer that cannot be reached, including the printhead, transport rollers, and optional magnetic encoder station.

Printer usage (total number of cards printed and total number of cards laminated) can be found on the printer Properties, Device Information tab, or via the OCP Info Menu—see Maintenance on page 63.

To order cleaning supplies, please visit www.zebra.com/zxp9-info.

When to Clean

- X-Cleaning Roller and Y-Cleaning Roller replacement should occur every 5,000 cards—see Maintenance on page 63.
- Heated Roller cleaning should occur every 20,000 cards.

Rollers

Important • Do not reuse cleaning cards.

To initiate the cleaning process:

Step 1. On the operator control panel (OCP) select **Menu**.

Step 2. From the Main Menu select **Advanced Settings**.

Step 3. From the Advanced Settings menu select **Clean Printer**.

To clean the X-drive rollers:

Step 1. Select **Clean Side Card Path** to run the X-roller cleaning routine.

Step 2. Use the X-roller cleaning card.

Step 3. Follow the OCP instructions.

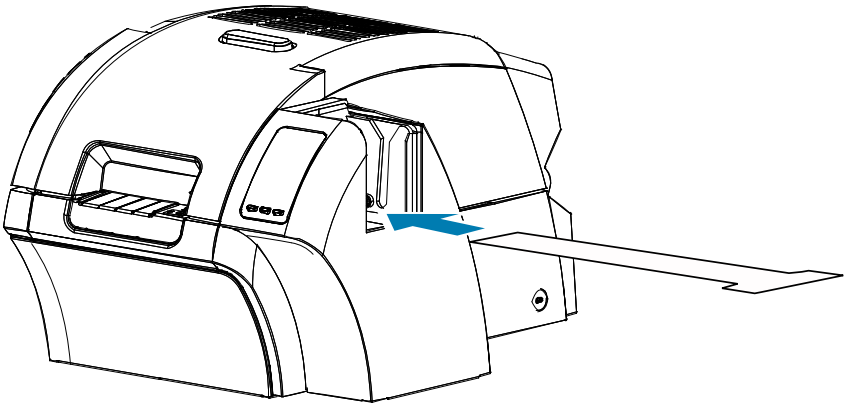

Step 4. When complete, the OCP will return to the Clean Printer Menu.

To clean the Y-drive rollers:

Step 1. Select **Clean Front Card Path** to run the Y-roller cleaning routine.

Step 2. Use the Y-roller cleaning card.

Step 3. Follow the OCP instructions.

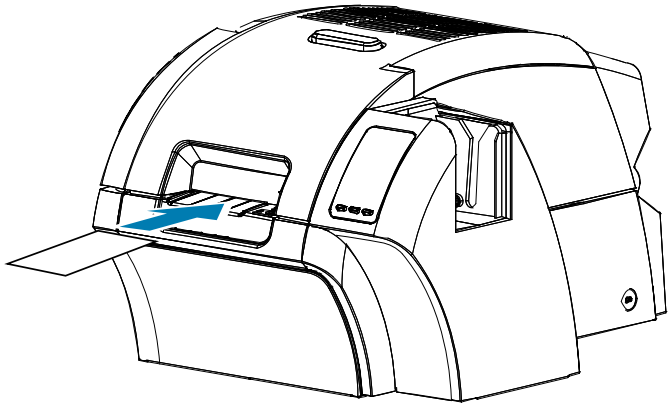

Step 4. When complete, the OCP will return to the Clean Printer Menu.

To clean the heated rollers:

Note • To avoid a long wait while the heated rollers cool to 140°F (60°C), perform cleaning before the rollers heat up (i.e., when first turned on and the rollers are still cold).

Step 1. Select **Clean Transfer Path** to run the heated roller cleaning routine.

Step 2. Use the hot roller cleaning card.

Step 3. Follow the OCP instructions.

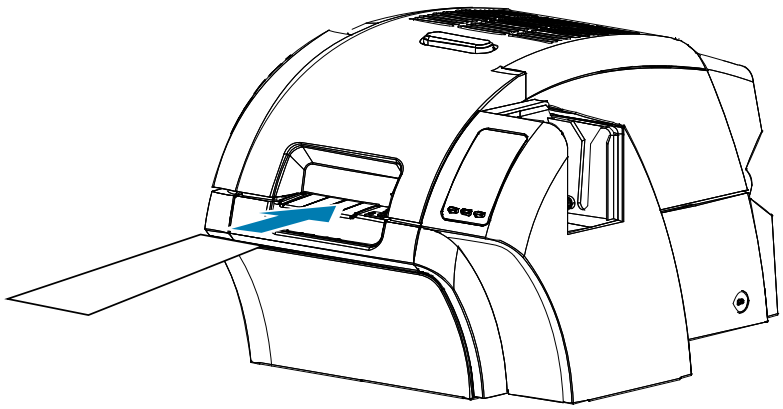

Step 4. When complete, the OCP will return to the Clean Printer Menu.

Platen

Platen cleaning is done manually, there is no OCP cleaning routine.

Step 1. Open the printer door.

Step 2. Remove the transfer film.

Step 3. Manually run the hot roller cleaning card over the platen.

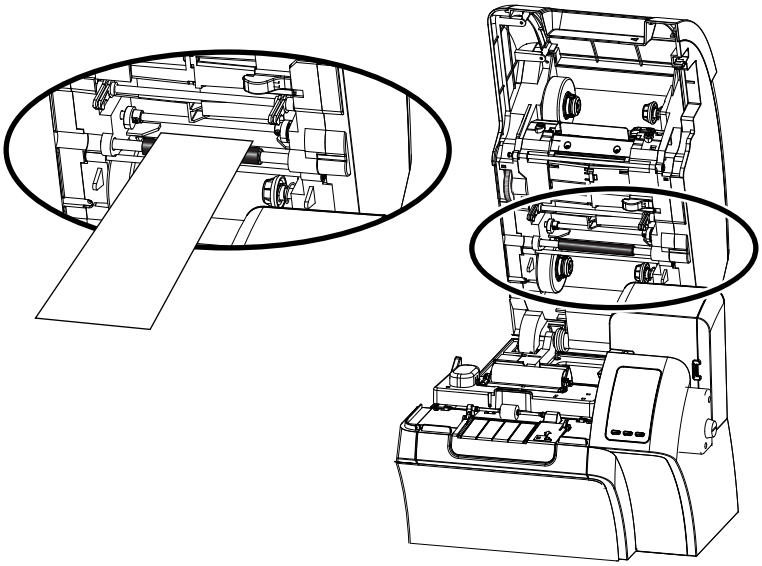

Step 4. Re-install the transfer film.

Step 5. Close the printer door.

Replacing the Cleaning Rollers

The X-cleaning roller is part of the cleaning cartridge assembly—only the roller is replaceable.

To replace the X-cleaning roller:

Step 1. Open the printer and remove the cleaning cartridge from the printer.

Step 2. Grasp the used roller and pull it out from the cartridge.

Step 3. Insert the new cleaning roller into the cartridge—press firmly until it snaps into place.

Step 4. Remove the protective cover.

To replace the Y-cleaning roller:

Step 1. Open the printer.

Step 2. Grasp the used cleaning roller and pull down and out in a singular motion.

Step 3. Grasp the new roller by the edges and remove the protective cover.

Step 4. While still holding the roller at the edges, insert the new cleaning roller into position by pressing in and up in a singular motion.

Cleaning the Laminator

The regular use of cleaning cards will clean and maintain important parts of your laminator that cannot be reached.

Printer usage (total number of cards printed and total number of cards laminated) can be found on the printer Properties, Device Information tab, or via the OCP Info Menu—see Maintenance on page 63.

When to Clean

- Cleaning should occur every 5,000 cards.
- Heated Roller cleaning should occur every 20,000 cards.

Laminator

Note • To avoid a long wait while the card transport rollers cool to 140°F (60°C), perform cleaning before the rollers heat (i.e., when first turned on and the rollers are still cold).

Important • Do not reuse cleaning cards.

To initiate the cleaning process:

Step 1. On the operator control panel (OCP) select **Menu**.

Step 2. From the Main Menu select **Advanced Settings**.

Step 3. From the Advanced Settings menu select **Clean Printer**.

To Clean the Card Path:

Step 1. Select **Clean Lam Card Path** to run the laminator cleaning routine.

Step 2. Use the laminator cleaning card in the laminator cleaning kit.

Step 3. Follow the OCP instructions.

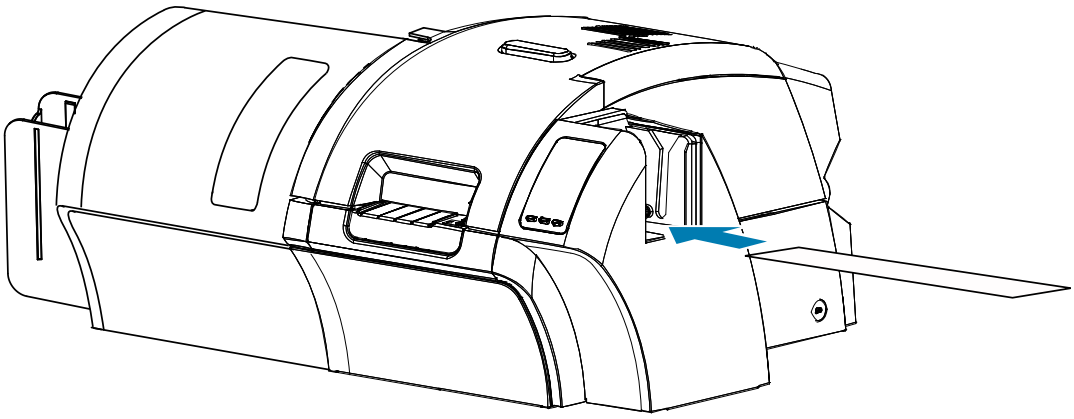

Step 4. When complete, the OCP will return to the Clean Printer Menu.

To Clean the Media Feed Rollers:

Step 1. Select **Clean Lam Med Rollers** to run the laminator media roller cleaning routine.

Step 2. Lift the laminator door to its upright position.

Step 3. Remove the laminate cassette(s)—see Maintenance on page 63.

Step 4. Leave the laminator door open

Step 5. Use the cleaning swab in the laminator cleaning kit. Bend the swab to release the cleaning fluid.

Step 6. Press **Next** when ready, then press **Top**.

Step 7. Clean the top media roller (circled below) by moving swab tip side-to-side as it turns five full revolutions. Only use moderate force.

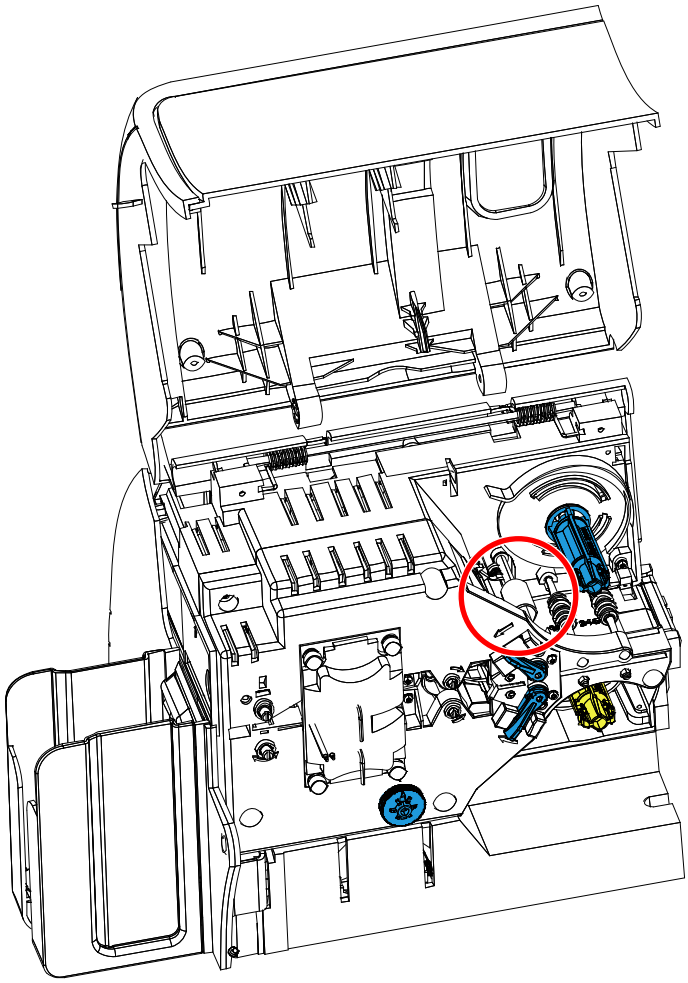

Step 8. For the double-sided laminator only:

a. Locate the roller (circled below) for the lower cassette.

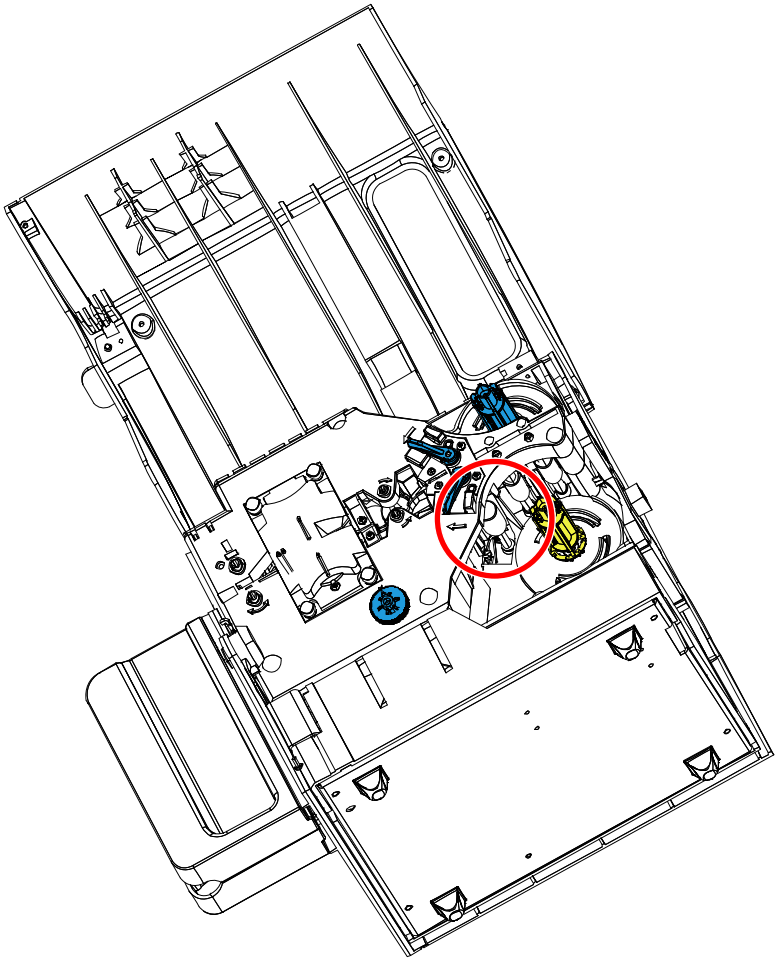

b. Use a second cleaning swab in the laminator cleaning kit. Bend the swab to release the cleaning fluid.

c. Press **Bottom**.

d. Clean the bottom media roller by moving swab tip side-to-side as it turns five full revolutions. Only use moderate force.

e. When the operation is complete, press **Exit**.

Step 9. Reinstall the laminate cassette(s).

Step 10. Close the laminator door.

To Clean the Heater Assembly Rollers:

Step 1. Select **Clean Lam Oven** to run the laminator oven cleaning routine.

Step 2. Observe the OCP, and wait until the laminator temperature goes below 140°F (60°C).

Note • To avoid a long wait while the card transport rollers cool to 140°F (60°C), perform cleaning before the rollers heat (i.e., when first turned on and the rollers are still cold).

Step 3. Lift the laminator door to its upright position.

Step 4. Remove the four thumb screws holding the heater assembly in place and slide the heater assembly out of the laminator (shown below).

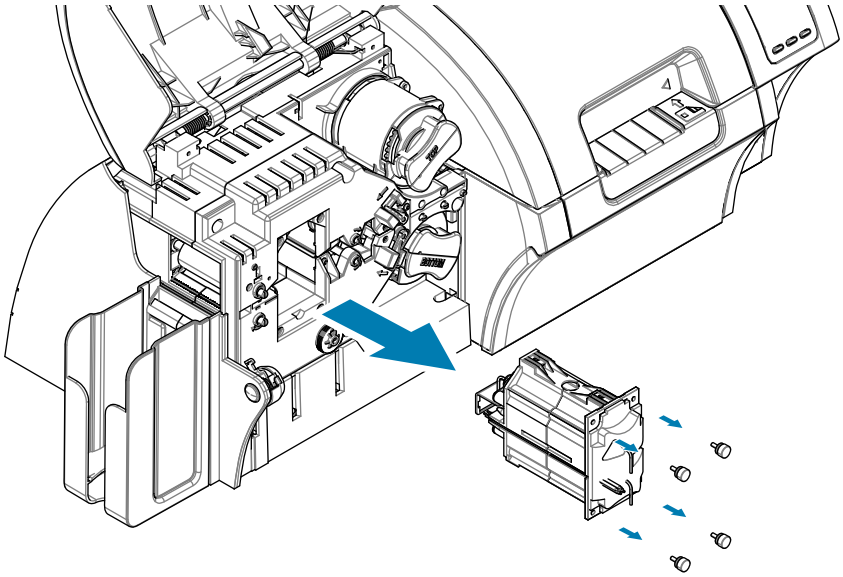

Step 5. Use the laminator hot roller cleaning card (with adhesive) from the laminator cleaning kit.

Step 6. Prepare the card for use.

Step 7. Insert the card into the slot (arrow below), adhesive side down.

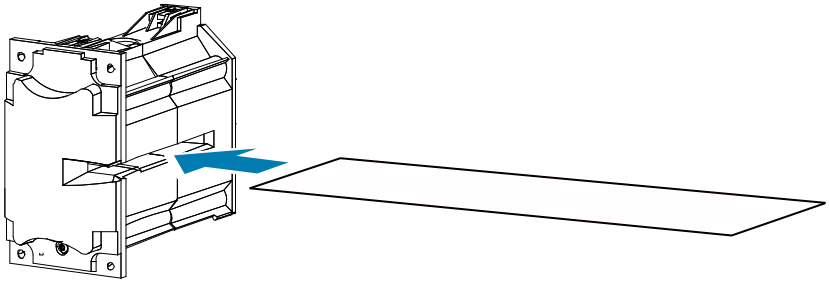

Step 8. Pull the card all the way through the heater assembly thereby cleaning the heater rollers.

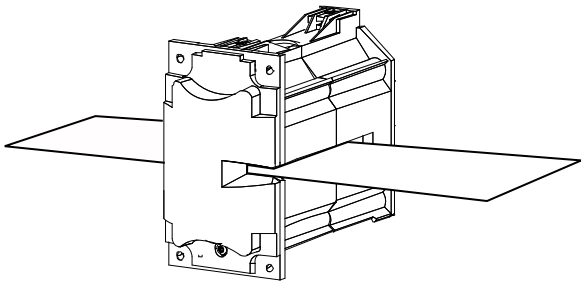

Step 9. Remove the card from the heater assembly.

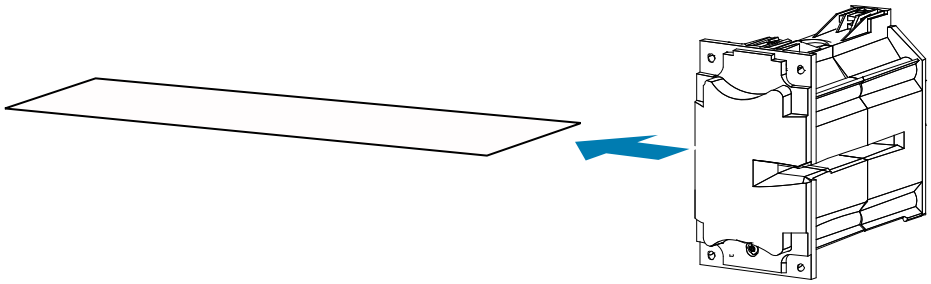

Step 10. Turn the card over, adhesive side up; and repeat Step 8, Step 9, and Step 10.

Step 11. Reinstall the heater assembly.

Step 12. Close the laminator door.

Step 13. Press **Exit** on the OCP when done.

Cleaning the Printhead

Printhead cleaning removes deposits when print anomalies persist. To avoid deposits, only use foam-tipped swabs or pens.

Caution • Never use a sharp object or any abrasive to scrape deposits from the printhead. Permanent damage to the printhead will result.

Hot Surface • Do not touch the printhead if the printer has been in service in the last 10 minutes. It could be very hot and cause a burn.

Step 1. Place the printer power switch in the OFF (○) position.

Step 2. Open the door, and remove the print ribbon.

Step 3. Bend the cleaning swab to release the cleaning fluid.

Step 4. Clean printhead by moving cleaning swab tip side-to-side across the printhead elements. Only use moderate force.

Step 5. Reinstall the print ribbon, and close the door.

Step 6. Place the printer power switch in the ON (**|**) position.

Magnetic Encoder Cleaning

The magnetic encoder is cleaned as part of the printer cleaning process . If the frequency of encoding errors increases, the head may need additional cleaning. To clean, only use foam-tipped swabs. To order cleaning swabs, go to the ZXP Series 9 Card Printer Support Page at www.zebra.com/zxp9-info.

Caution • Never use a sharp object or any abrasive to scrape deposits from the magnetic encoder. Permanent damage to the magnetic head will result.

Step 1. Open the printer cover.

Step 2. Open the idler roller assembly door.

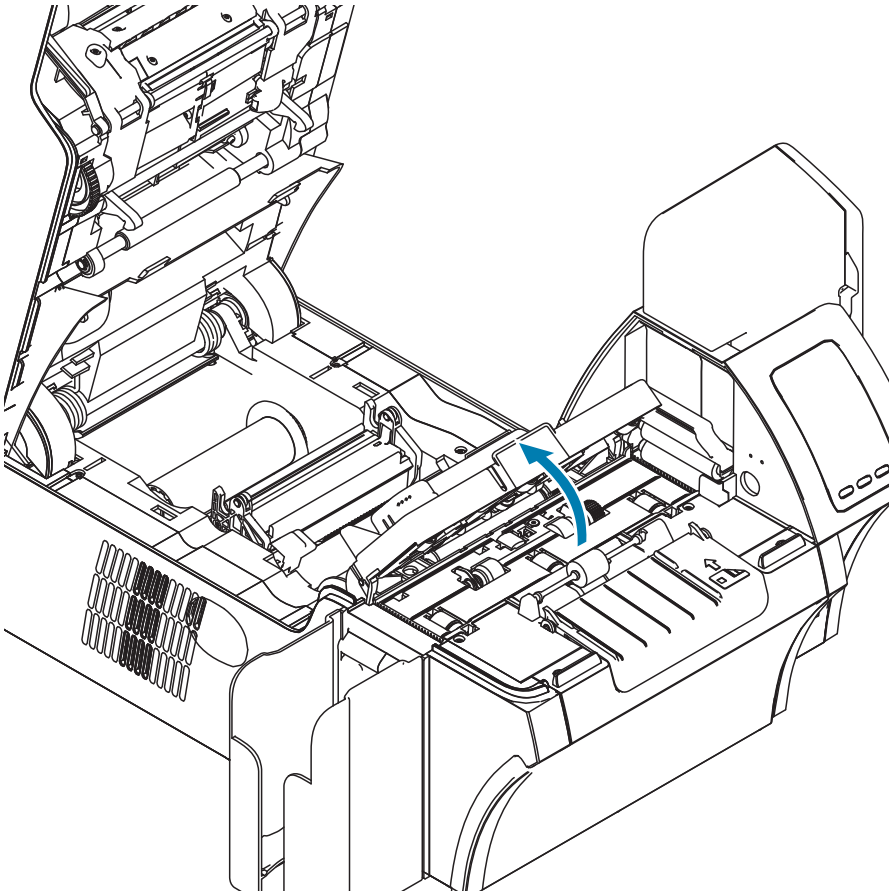

Step 3. Bend the cleaning swab to release the cleaning fluid.

Step 4. Clean the magnetic encoder by moving cleaning swab tip side-to-side across the head elements.

Step 5. Close the idler roller assembly door.

Step 6. Close the door.

Troubleshooting

OCP Error Messages

The table offers causes and solutions to symptoms related to improper operation. Check the table when experiencing any loss of operation or print quality.

CODE	MESSAGE	POSSIBLE CAUSE	POSSIBLE SOLUTION
1	SYSTEM NOT READY	A problem was detected during printer start-up.	Power cycle the printer, and retry. If problem persists, contact Zebra Tech Support.
2–4	SYSTEM ERROR	Internal logic error.	Power cycle the printer, and retry.
5	FW UPGRADE ERROR	Firmware upgrade incompatibility.	Verify the version, and retry installing the firmware.
6	DIAGNOSTIC ERROR	Error encountered in Diagnostic Mode.	Power cycle the printer, and retry.
7	FW UPGRADE ERROR	Firmware upgrade failed.	Verify the version, and retry installing the firmware.
8	CRITICAL ERROR SHUTTING DOWN	Major malfunction encountered.	Contact Zebra Tech Support.
3001	PRINTER OFFLINE	Status toggled (offline/online) via the OCP Advanced Settings Menu.	Change status to online via the OCP Advanced Settings Menu.
4002	INVALID CARD TYPE	Encoding error.	• Ensure that you are using the correct card type. • In the Encoding tab of the driver Printing Preferences, check that the settings are correct for the cards you are using. • Ensure that the data conforms to ISO Specifications. • Retry writing and reading.
4003	CARD JAM	Card is jammed in the Printer	Clear the card path.
4010	OUT OF FILM	The transfer film has run out.	• Confirm proper installation. • Load new roll of transfer film.
4011	INTM INVALID	Transfer film does not match the printer—incorrect OEM code.	• Verify the part number of the transfer film is correct on film RFID tag. • Contact Zebra Tech Support.

CODE	MESSAGE	POSSIBLE CAUSE	POSSIBLE SOLUTION
4012	FILM JAM	The transfer film is jammed.	• Check the transfer film. • Reinstall the transfer film. • Repair the break in the transfer film and reinstall.
4013	FILM MOTION ERROR	Transfer film not correctly responding to motion commands.	• Check the transfer film. • Reinstall the transfer film. • Power cycle the printer.
4014	CARD FEED ERROR	Card is jammed in Feeder Cartridge.	• Clear card jam in Feeder Cartridge, and re-seat Feeder Cartridge. • Ensure that cards are not stuck together and that they are the correct thickness (30 mil only).
4015	CARD NOT INSERTED	Card was not fed into the Single Card Feed Slot within 30-second period.	Retry and feed card into the Single Card Feed Slot, or cancel the operation.
4016	OUT OF CARDS	• The Feeder Cartridge is empty. • Card is stuck in Feeder Cartridge.	• Load cards in the Feeder Cartridge. • Re-seat the Feeder Cartridge.
4017	INTM AUTH FAIL	RFID auth invalid or corrupt.	• Contact Zebra Tech Support.
5001	OUT OF RIBBON	Print ribbon has run out.	Load a new roll of print ribbon.
5002	INVALID RIBBON	Ribbon does not match the printer—incorrect OEM code.	• Verify the part number of the ribbon is correct on film RFID tag. • Contact Zebra Tech Support.
5003	RIBBON JAM	Print ribbon is jammed.	• Check the print ribbon. • Reinstall the print ribbon. • Repair the break in the print ribbon and reinstall.
5004	RIBBON MOTION ERROR	Print ribbon not correctly responding to motion commands.	• Check the print ribbon. • Reinstall the print ribbon. • Repair the break in the print ribbon and reinstall.
5005	RIBBON ADC ERROR	Possible hardware issue.	Contact Zebra Tech Support.
5006	RIBBON BEMF ERROR	Problem with the Back EMF (BEMF) of the ribbon motors.	Contact Zebra Tech Support.
5007	RIB COLOR DETECT ERR	• Print ribbon is not installed correctly. • Tricolor sensor error.	• Reinstall the print ribbon. • Perform tricolor calibration in ZMotif Service Partner Tool. • Contact Zebra Tech Support.
5008	RIBBON AUTH FAIL	RFID auth invalid or corrupt.	• Contact Zebra Tech Support.
6001–6008	GENERAL MEMORY ERROR	There is a problem when accessing general memory.	• Power cycle the printer, and retry. • Contact Zebra Tech Support.
6009	FLASH ERASE ERROR	There is a problem when accessing flash memory.	• Power cycle the printer, and retry. • Contact Zebra Tech Support.
6010	FLASH ERASE VERIF ERR	There is a problem when accessing flash memory.	• Power cycle the printer, and retry. • Contact Zebra Tech Support.

CODE	MESSAGE	POSSIBLE CAUSE	POSSIBLE SOLUTION
6011	FLASH PROGRAM ERROR	There is a problem when accessing flash memory.	• Power cycle the printer, and retry. • Contact Zebra Tech Support.
6012	FLASH PROG VERIFY ERR	There is a problem when accessing flash memory.	• Power cycle the printer, and retry. • Contact Zebra Tech Support.
6013	INVALID FW SRECORD	There is a problem when accessing flash memory.	• Power cycle the printer, and retry. • Contact Zebra Tech Support.
6015–6025	GENERAL MEMORY ERROR	There is a problem when accessing general memory.	• Power cycle the printer, and retry. • Contact Zebra Tech Support.
7001	CARD FEED ERROR	Card is jammed in Feeder Cartridge.	• Clear the card jam in the Feeder Cartridge, and re-seat the Feeder Cartridge. • Ensure that cards are not stuck together and that they are the correct thickness (30 mil only).
7003	PRINTHEAD CABLE ERROR	Printhead cable loose or disconnected.	Check printhead cable connection, reconnect if loose or disconnected.
7005	PRINTHEAD TOO HOT	Printhead temperature out of proper range (HOT).	Contact Zebra Tech Support.
7006	PRINTHEAD TOO COLD	Printhead temperature out of proper range (COLD).	Contact Zebra Tech Support.
7008	COVER OPEN	This warning will be displayed if the cover protecting the Printer Module is opened.	This warning will be cleared when the printer cover is closed.
7010	PRINTHEAD MOTION ERR	Printhead did not move to proper position during initialization.	• Power cycle the printer, and retry. • Re-seat the printhead.
7011	ROLLERS OVER TEMP	Heated Rollers (used to transfer the image from the transfer film to the Card) are too hot for proper operation.	Turn off power, and contact Zebra Tech Support.
7012	ROLLERS UNDER TEMP	Heated Rollers (used to transfer the image from transfer film to Card) are not hot enough for proper operation.	Turn off power, and contact Zebra Tech Support.
7013	MOTOR VOLTAGE ERROR	Incorrect voltage detected at one or several motors in the unit.	Power cycle the printer, and retry.
7014	SCRIPT PROCESSING ERROR	Internal logic error.	Power cycle the printer, and retry.
7015	MAG MOTION ERROR	Printhead did not move to proper position during initialization.	Power cycle the printer, and retry.
7017	REJECT ERROR	A problem during the reject process.	Contact Zebra Tech Support.
7018	SMARTCARD ERROR	• Encoding error. • Faulty card.	• Ensure that you are using the correct card type. • Check that the cards are loaded in the correct orientation. • Ensure that the data conforms to ISO Specifications. • Retry writing and reading.
7019	SCRIPT CONTENT ERROR	Internal logic error.	Power cycle the printer, and retry.

CODE	MESSAGE	POSSIBLE CAUSE	POSSIBLE SOLUTION
7020	SCRIPT SEND ERROR	Internal logic error.	Power cycle the printer, and retry.
7034	REJECT BIN FULL REMOVE CARDS	The Reject Bin is full.	Remove the cards from the bin, and reset the reject bin card count to 0 via the OCP (Main Menu > Advanced Settings > Clear Reject Bin).
9001	MAG READ ERROR	• Encoding error. • Defective magnetic stripe.	• Ensure that you are using the correct card type. • Check that the cards are loaded with the magnetic stripe in the correct orientation. • Ensure that the cards are set-up correctly in the printer driver (coercivity setting). • Ensure that the data conforms to ISO Specifications. • Retry reading.
9002	MAG WRITE ERROR	• Encoding error. • Defective magnetic stripe.	• Ensure that you are using the correct card type. • Check that the cards are loaded with the magnetic stripe in the correct orientation. • Ensure that the cards are set-up correctly in the printer driver (coercivity setting). • Ensure that the data conforms to ISO Specifications. • Retry writing.
9004	NO MAG STRIPE	Magnetic stripe not detected.	• Ensure that you are using the correct card type. • Check that the cards are loaded with the magnetic stripe in the correct orientation.
10001	CONTACT READ ERROR	• Faulty card. • Incorrect card orientation. • Incorrect Mode or Protocol setting. • Faulty reader.	• Try another card. • Try another card (check orientation). • Correct the Mode or Protocol setting. • Contact Zebra Tech Support.
10002	CONTACT WRITE ERROR	• Faulty card. • Incorrect card orientation. • Incorrect Mode or Protocol setting. • Faulty writer.	• Try another card. • Try another card (check orientation). • Correct the Mode or Protocol setting. • Contact Zebra Tech Support.
11001	CONTACTLESS READ ERROR	• Faulty card. • Incorrect Mode or Protocol setting. • Faulty reader.	• Try another card. • Correct the Mode or Protocol setting. • Contact Zebra Tech Support.

CODE	MESSAGE	POSSIBLE CAUSE	POSSIBLE SOLUTION
11002	CONTACTLESS WRITE ERROR	• Faulty card. • Incorrect Mode or Protocol setting. • Faulty writer.	• Try another card. • Correct the Mode or Protocol setting. • Contact Zebra Tech Support.
14001	MISSING HCB	The Halogen Controller Board (HCB) is missing.	• Check connection to HCB. • Contact Zebra Tech Support.
14002	HCB BULB ERROR	The Halogen Controller Board (HCB) is unable to pulse the upper and lower heaters to bring the upper and lower rollers to the proper temperature.	• Power cycle the printer, and retry. • Contact Zebra Tech Support.
14003	HCB SENSOR ERROR	The Halogen Controller Board (HCB) is unable to detect temperature of the upper or lower rollers.	Contact Zebra Tech Support.
14004	HCB FIRMWARE MISSING	The Halogen Controller Board (HCB) firmware is missing.	• Update printer firmware. • Contact Zebra Tech Support.
15001	MISSING MAB	An error occurred when reading the RFID Tag by the MAB (Media Authentication Board).	• Check print ribbon orientation. • Verify part number of the print ribbon. • Power cycle the printer, and retry. • Contact Zebra Tech Support.
15002	MAB FIRMWARE MISSING	MAB (Media Authentication Board) Firmware is missing.	Install the firmware.
17001	LAMINATOR MISSING	Laminator data cable loose or disconnected.	Contact Zebra Tech Support.
17002	LAMINATOR FAILED INITIALIZATION	Laminator was detected by the printer, but was unable to communicate to it.	Contact Zebra Tech Support.
17003	LAMINATOR UNKNOWN ERROR	An unknown error has occurred – this is an indication of a FW problem and should not occur.	Press RETRY on the OCP.
17004	MISSING LAMINATOR MAB	An error occurred when reading the RFID Tag by trying to communicate to the Laminator MAB (Media Authentication Board).	• Check laminate orientation. • Power cycle the printer, and retry. • Contact Zebra Tech Support.
17005	TOP LAMINATE FEED FAIL	• Top laminate cartridge is not installed properly. • Cartridge is not removed when that side of the card is not being laminated. • A mis-cut piece of laminate (rare) is obscuring the media sensor.	• Remove, reposition, and re-install the top laminate cartridge. • Remove the top laminate cartridge. • Remove the mis-cut piece of laminate.
17006	BOTTOM LAMINATE FEED FAIL	• Bottom laminate cartridge is not installed properly. • Cartridge is not removed when that side of the card is not being laminated.	• Remove, reposition, and re-install the bottom laminate cartridge. • Remove the bottom laminate cartridge.

CODE	MESSAGE	POSSIBLE CAUSE	POSSIBLE SOLUTION
17007	TOP LAMINATE REGISTRATION ERROR	• Improperly prepared registered laminate. • Media misfeed. • Patch length improperly set. • Unexpected end of laminate roll detected.	Remove and recut laminate in the center of the index notch, re-install, and retry.
17008	LAMINATOR CARD FEED FAIL	Printer has not fed the card far enough into laminator mechanism for infeed rollers to grab it.	Open the Laminator and printer doors to check for jammed/stuck cards. Note: Only 30 mil cards supported.
17009	LAMINATOR EARLY CARD JAM	Card did not make it to the staging rollers.	Remove the card and/or laminate that is stuck in the laminator staging/cutting area.
17010	LAMINATOR MIDDLE CARD JAM	Card and laminate have jammed inside heater assembly, often due to mis-positioned laminate patch sticking to heated rollers.	Remove the oven, and inspect for stuck cards.
17011	LAMINATOR LATE CARD JAM	Card did not unblock the exit sensor in the specified time.	• Check for card jam in the exit area. • Assure that the sliding exit door is not partially blocking the exit path.
17012	LAMINATOR POLL TIMEOUT	The laminator expects the printer to periodically send commands to it within a specified time period. If it fails to do so, it assumes that something is wrong with the communication link or that the printer is down. This error may occur if the printer-to-laminator communications is having intermittent problems.	Power cycle the printer, and retry.
17013	LAMINATOR TOP HEATER FAIL	Top heater did not turn on after being instructed to do so. When the heater is enabled, the controller will wait a certain specified amount of time for it to attain the set target temperature. If the heater fails to reach the target in the specified time, the TopHeaterFail fault will be set.	• Power cycle the printer, and retry. • Replace the top halogen bulb.
17014	LAMINATOR BOTTOM HEATER FAIL	Bottom heater did not turn on after being instructed to do so. When the heater is enabled, the controller will wait a certain specified amount of time for it to attain the set target temperature. If the heater fails to reach the target in the specified time, the BotHeaterFail fault will be set.	• Power cycle the printer, and retry. • Replace the bottom halogen bulb.
17015	LAMINATOR TOP TEMPERATURE HIGH	If the top roller temperature ever exceeds a fixed temperature threshold, the over temp error occurs.	• Power cycle the printer, and retry. • Contact Zebra Tech Support.

CODE	MESSAGE	POSSIBLE CAUSE	POSSIBLE SOLUTION
17016	LAMINATOR BOTTOM TEMPERATURE HIGH	If the bottom roller temperature ever exceeds a fixed temperature threshold, the over temp error occurs.	• Power cycle the printer, and retry. • Contact Zebra Tech Support.
17017	LAMINATOR TOP CUTTER STALL	Top cutter blade is obstructed, or top cutter mechanism is damaged.	Contact Zebra Tech Support.
17118	LAMINATOR BOTTOM CUTTER STALL	Bottom cutter blade is obstructed, or bottom cutter mechanism is damaged.	Contact Zebra Tech Support.
17019	LAMINATOR TOP CUTTER FAIL	Top cutter has failed.	Contact Zebra Tech Support.
17020	LAMINATOR BOTTOM CUTTER FAIL	Bottom cutter has failed.	Contact Zebra Tech Support.
17021	LAMINATOR TOP TEMP SENSOR FAIL	The top temperature (thermopile) sensor has failed.	Contact Zebra Tech Support.
17022	LAMINATOR BOTTOM TEMP SENSOR FAIL	The bottom temperature (thermopile) sensor has failed.	Contact Zebra Tech Support.
17023	LAMINATOR FAN FAIL	This should only happen if one or both cooling fans fail or the cooling vents near the heated roller assembly are blocked or the fan(s) have failed.	Check for blocked vents.
17024	LAMINATOR EEPROM DEFAULT	The parameters stored in EEPROM have been reset to their default values. This will not normally happen, but could be seen with certain FW upgrades when new parameters have been added by Engineering. It could also indicate a problem with the Laminator's EEPROM.	• Press RETRY on the OCP when this error occurs. • Power cycle the printer, and retry.
17025	LAMINATOR TOP TEMPERATURE LOW	If the top roller temperature does not reach a fixed temperature threshold, the under temp error occurs.	Power cycle the printer, and retry.
17026	TOP AND BOTTOM LAMINATES OUT	The top and bottom laminates have run out.	Load new rolls of laminate.
17027	TOP LAMINATE OUT	The top laminate has run out.	Load new roll of laminate.
17028	BOTTOM LAMINATE OUT	The bottom laminate has run out.	Load new roll of laminate.
17029	INVALID TOP LAMINATE	Wrong OEM code, laminate not supported.	• Power cycle the printer, and retry. • Replace with valid Zebra laminate.
17030	INVALID BOTTOM LAMINATE	Wrong OEM code, laminate not supported.	• Power cycle the printer, and retry. • Replace with valid Zebra laminate.
17031	BOTTOM LAMINATE REGISTRATION ERROR	• Improperly prepared registered laminate. • Media misfeed. • Patch length improperly set. • Unexpected end of laminate roll detected.	Remove and recut laminate in the center of the index notch, re-install, and retry.

CODE	MESSAGE	POSSIBLE CAUSE	POSSIBLE SOLUTION
17038	LAMINATOR COVER OPEN	This warning will be displayed if the cover protecting the laminator is opened.	This warning will be cleared when the laminator cover is closed.
17040	LAMINATOR INITIALIZING	This warning will be displayed after the laminator door is closed and laminate spools are re-read/ detected.	No action needed
17041	LAMINATOR FIRMWARE MISSING	LCB (Laminator Controller Board) Firmware is missing.	Install the firmware.
17042	LAMINATOR MAB FIRMWARE MISSING	Laminator MAB (Media Authentication Board) Firmware is missing.	Install the firmware.
18001	ETHERNET COMM ERROR	Ethernet communication problem.	• Disconnect and reconnect the network cable. • Power cycle the printer, and retry.
19001	WIFI COMM ERROR	Wireless Ethernet communication problem.	• Power cycle the printer. • Re-run the set-up wizard to • re-establish the wireless settings. • Contact Zebra Tech Support.
19002	WIFI ACCESS POINT MISSING	Access point, specified by printer wireless settings, not found during initial printer scan after power up.	Verify access point, specified by the printer wireless settings, is properly connected to the network and turned on.
19003	WIFI LINK LOST	• Connection to the access point was lost. • Poor signal quality or low signal strength. • Interference. • Access point power has been lost.	• Verify access point is properly connected to the network and powered ON. • Put the printer antenna in a similar orientation than access point's antenna, and re-run the set-up wizard to re-establish the wireless settings.
19004	WIFI INCOMPATIBLE NETWORK	• Printer, after power up, found the access point specified by the wireless settings, but found the access point settings incompatible. • Access point configuration has been modified.	Re-run the set-up wizard to establish the new wireless settings.
19005	WIFI ASSOCIATION FAILED	• During association with an access point, the association failed. • Poor signal quality. • Low signal strength.	Put the printer antenna in a similar orientation as the access point's antenna, and re-run the set-up wizard to re-establish the wireless settings.
19006	WIFI CONNECTION FAILED	• They key handshake following the association failed. • WEP Key or WPA passphrase is incorrect.	Ensure that you have the correct key/passphrase, then re-run the set-up wizard to establish new wireless settings.

Clearing a Card Jam

A card jam is reported by the printer when a card fails to reach a sensor as expected, or a card blocks a sensor unexpectedly.

Caution • Do not use tools to remove stuck cards, this will void the product warranty and may cause damage to the equipment.

Printer

A card jam in the printer will normally occur in one of two places: the card path, or the transfer station.

Step 1. Open the printer.

Step 2. Open the idler cover.

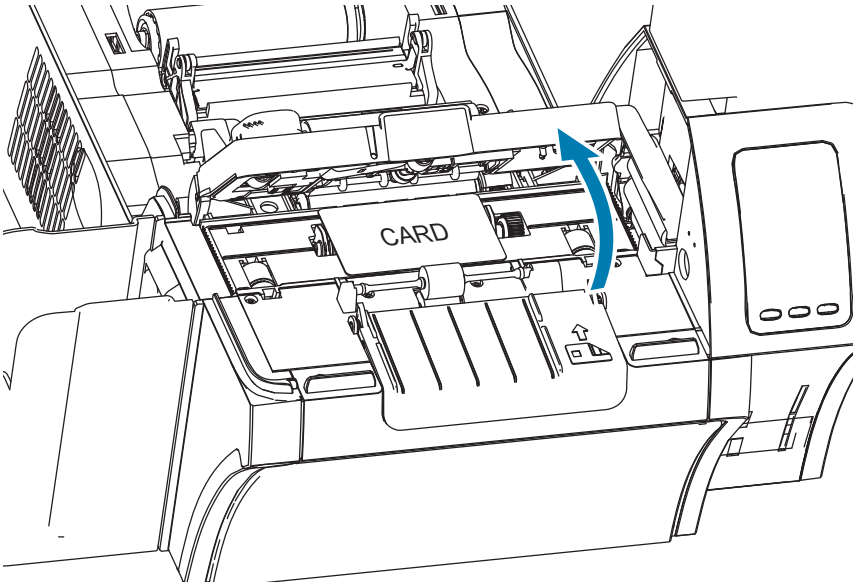

Step 3. Remove the card (if present). If no card present, continue to next step.

Step 4. Turn the manual advance wheel next to the transfer station. Continue turning until the wheel stops or the card has been ejected sufficiently enough to remove it.

Caution • Card may be hot.

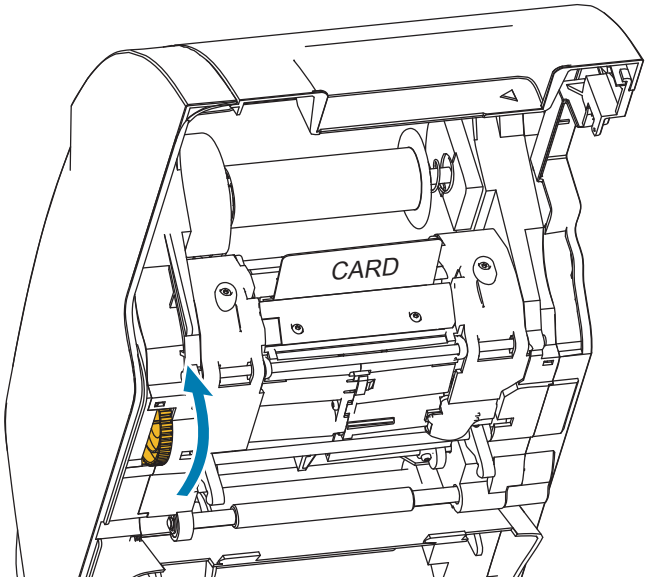

Laminator

A card jam in the laminator will normally occur along the lamination path.

Step 1. Open the laminator.

There are three areas along the lamination path and six rollers that can be manually advanced if a card is stuck.

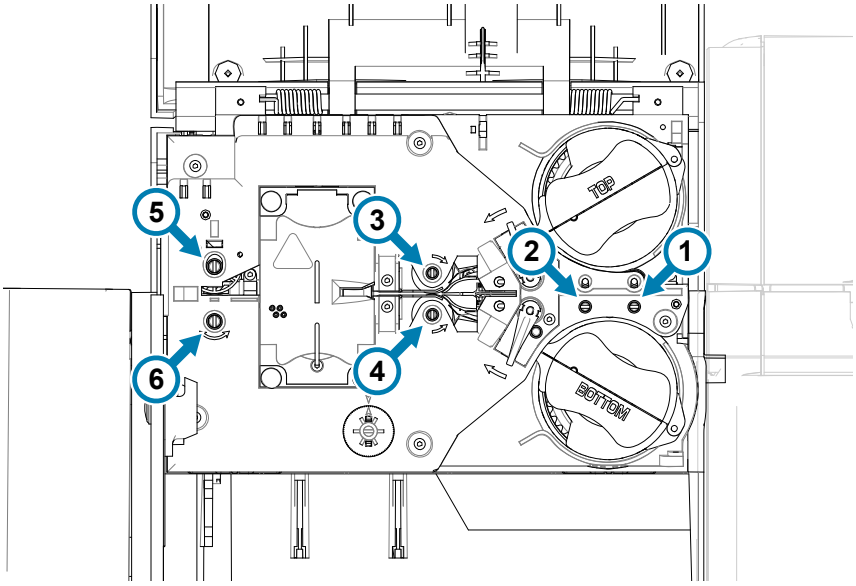

Note • For rollers 1 through 4, use the narrow side of the manual advance tool; for rollers 5 and 6, use the wider side of the manual advance tool.

Step 2. Identify the location of the card and, using the manual advance tool, turn the appropriate roller counter-clockwise. Advance the card to the next area or until it has been ejected sufficiently enough to remove it.

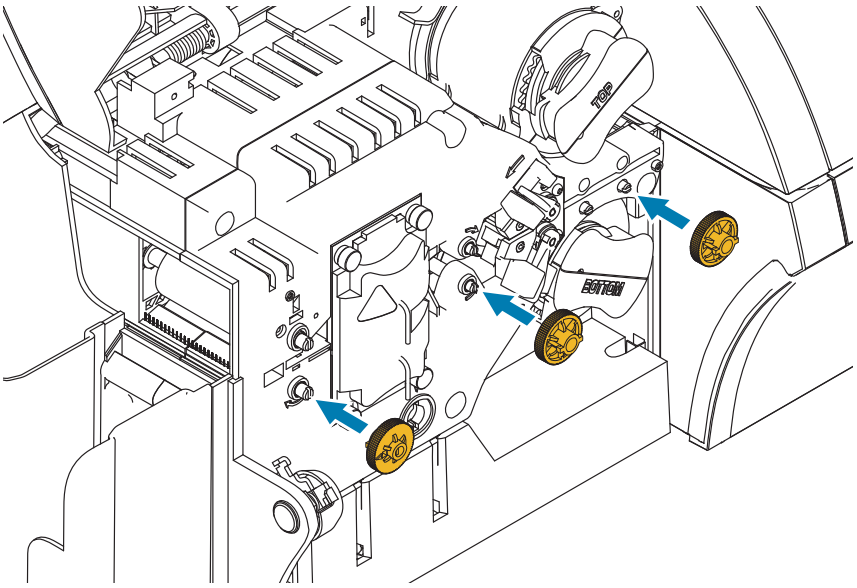

In some cases, a card may get wrapped around the laminator heater assembly rollers. In this case, the laminator heater assembly can be removed.

Step 1. Remove the four thumb screws holding the heater assembly in place and slide the heater assembly out of the laminator (shown below).

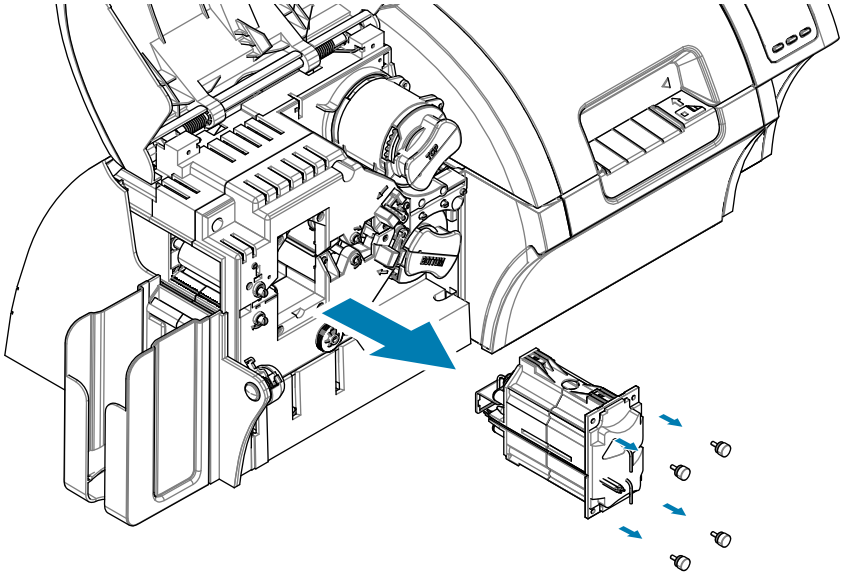

Step 2. Remove the card—do not use tools. If the card is wrapped around the heater assembly rollers, contact Zebra to replace the heater assembly.

OCP Test Cards

Image	Title	Description	Use
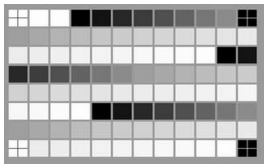	GRADIENT BOXES	3 sets of light-to-dark grayscale ramps	Used to validate the tonal scale of the printer.
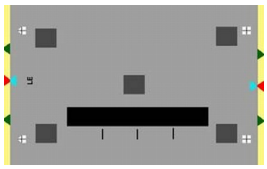	DENSITY SETUP	Mid-gray and maximum density fields on a flat gray surface	Also used to check the left/right and top/bottom offsets or the centering of the image on the card.
	MONOCHROME ONLY	Barcode and text	Used to verify monochrome print capability and quality.

Adjustments

Overview

When making adjustments, be aware that interdependencies exist between parameters (e.g., parameter changes which reduce warp could induce partial transfer).

There are four basic parameters to control, and these parameters differ for single- and double-sided printing for each card type:

- Front transfer temperature (upper roller temperature in degrees Celsius)
- Back transfer temperature (lower roller temperature in degrees Celsius)
- Input transfer speed (speed entering the print station in inches per second)
- Output transfer speed (speed exiting the print station in inches per second)

It is very helpful to think about the energy being put into the card as opposed to just temperature. Speed parameters are the “big knobs” for adjusting energy, while temperature parameters are the “fine tuning knobs.” Slowing down only 0.1 inches per second (IPS) has almost twice the energy-increasing effect as raising the temperature 5 degrees. In terms of energy:

- Far too little energy = no transfer at all
- Not enough energy = partial transfer
- Too much energy = card warp
- Far too much energy = card jams caused by severe warp

Speed

Going slower in can help guarantee good transfer, while going faster out can prevent the already-transferred card from remaining hot long enough to soften, weaken, warp, and possibly even jam. Usually, the most reliable and stable speed settings range between 1.2 IPS and 2.6 IPS, with lower generally being better for most card types.

Temperature

A top temperature which is slightly higher than the corresponding bottom temperature normally works well for double-sided transfer. For single-sided transfer, there will be significantly lower temperatures for the back side of the card to avoid accidental transfer. In general, a lower temperature difference between the front and back sides will induce fewer warming/cooling cycles in the printer.

To compensate for interdependency issues, try adjusting the parameters as follows:

- Start by correcting any partial transfer issues by using the procedure outlined in Partial Transfer on page 91.
- Then attempt to improve warpage by using the procedure outlined in Warpage on page 93. Start with acceptable settings from Step 1. While adjusting parameters, ensure that the transfer quality remains acceptable. Do not continue reducing temperatures or increasing speeds if the transfer quality becomes unacceptable.

Transfer Temperature

Transfer temperature is controlled by increasing or decreasing the value in one degree increments. However, changing values in less than five degree increments will take significantly more time in establishing the correct card specification. Values are entered for both single- and double-sided printer configurations, and for the front and back of the card independently (in the case of double-sided printing).

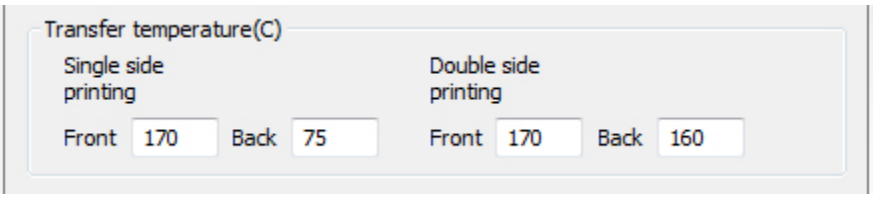

Transfer Input and Output Speed

Transfer input speed controls the speed in which the card enters the transfer station in inches per second (IPS), to an accuracy of one one-hundredth (0.01) of an inch. However, changing values in less that five one-hundredth (0.05) of an inch increments will take significantly longer in establishing the correct card specification. Values are entered for both single- and double-sided printer configurations, and for the input and output speeds independently.

Additional considerations and information

The thermal conductivity of the card—or from what and how the card is made—fundamentally influences re-transfer performance. Card characteristics affecting re-transfer include:

- **Single- vs. multi-layer construction**: for single-layer cards, warp is often lowest when equal energy is put into each side of the card, while such is not usually true for multi-layer cards made of a mix of metals and plastics due to the widely different thermal properties of the materials;
- **Surface finish**: glossy vs. matte;
- **Magnetic stripe**: more prone to warp, especially low-coercivity (LoCo) cards identifiable by a brown stripe instead of the common high-coercivity black stripe;
- **Smart card**: often containing asymmetrically-distributed, thermally conductive, dissimilar components which can make warp reduction more challenging.

Even cards sold as typical PVC may not all be similar in terms of re-transfer behavior, given their exact binders, fillers, pigmentations, and other materials ratios. While many competitive re-transfer printers tend to discourage the use of PVC because it can be difficult to use in their re-transfer printers, a prime ZXP Series 9 Card Printer advantage is the ability to successfully re-transfer to economical PVC cards.

Laminator Adjustments

While in most cases it is not necessary to adjust either the temperature, or the speed of the lamination process, there may be times when it is. This may be due to the particular material of the card, or because of adjustments made to the transfer process.

Temperature adjustments are in degrees Celsius, and are made by changing the value of either the top or bottom laminate independently in one degree increments. However, changing values in less than five degree increments will take significantly more time in establishing the correct card specification.

Speed adjustment is in inches per second (IPS), and is made by changing the value of the lamination speed to an accuracy of one one-hundredth of an inch.

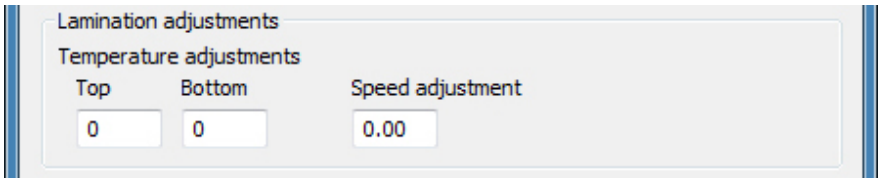

Identifying Job Quality Issues

For the ZXP Series 9 Card Printer, image quality can be broken down into two areas: print quality and transfer quality. Print quality refers to the quality of the text, barcodes, and images that are printed on the film, while transfer quality refers to the quality of the transfer of the film onto the card, as well as card warpage and flash artifacts.

Print Quality Issues

Color Accuracy

When the colors on the printed card do not match the expected result, there are several steps that may be taken to get the desired output.

1. If using the driver, make adjustments in the Color Optimization tab of Printer Preferences.
2. If using the driver, create and apply a Windows ICC color profile.
3. Whether using the driver or not, contact Zebra to create a custom lookup table that can be downloaded to the printer using the ZXP Toolbox.

Dirt and Debris

Spots and speckles appearing on the card may be caused by dirt and debris in the printer.

- Replace the cleaning rollers
- Clean the printer

Image Placement

If the image printed on the card seems to have shifted, this may be an image placement issue.

- Use the Print Position adjustment feature in the ZXP Toolbox, located in the Calibration tab.

Smear

Smear may occur when a sudden shift from a dark color to a light color occurs and the printhead has not sufficiently cooled when printing the light color, thereby the dark color appears to “smear” into the light color.

- Lower the Preheat value on the Color Optimization tab in the Printing Preferences Control Panel.
- Switch to Fine print mode on the Card Setup tab.

Black Extraction

When the black text or images does not appear black or crisp, or text that is supposed to be black appears muddy or not sharp, this may be an issue where the black text or image was not printed using the black panel.

- Check the source image; RGB values up to 25,25,25 can be printed as black by using the sliders on the K Extraction page. If RGB values are greater than 25,25,25, then the
- image will need to be modified to bring the RGB values under this threshold
- Adjust the properties in the Front or Back K Extraction menu (refer to the Help content in the Printing Preferences Control panel).

Ribbon Wrinkle

Ribbon wrinkle appears as a streak of color that was not part of the original image. It typically originates from the edges of the card, and sometimes occurs when printing a really dark image, or near the transition between really dark and really light images. If this occurs, contact Zebra Tech Support.

Mis-registration

Mis-registration occurs when the Y, M, C, and/or K panels are not properly aligned with each other. The effect may appear as a lack of sharpness, or a color halo. If this occurs, contact Zebra Tech Support.

Transfer Quality Issues

Partial Transfer

Partial transfer is usually caused by lack of energy being transferred to the card (i.e., the temperatures are too low or the speeds are too fast).

Light or missing transfer on the sides

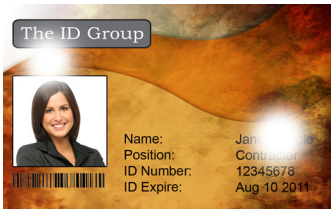

Spotty transfer anywhere on the card

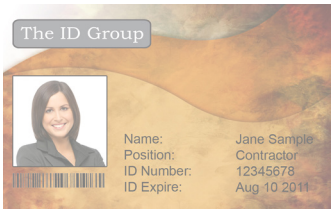

Light transfer on the entire card

Front of card

Increase Front Transfer Temperature

Step 1. From the Card Specifications window, make a note of the default front transfer temperature settings.

Step 2. Increase the appropriate (Single or Double side) front transfer temperature by 5.

Step 3. Click **OK**.

Step 4. Print a test card—see Printing a Test Card on page 46.

Step 5. Examine the test card.

- If there is noticeable improvement, repeat Steps 2–4 until the problem is corrected or there is no more improvement.
- If there is no noticeable improvement after a number of cycles, return the value to its default setting and go to next correction.

Decrease Transfer Input Speed

Step 1. From the Card Specifications window, make a note of the default transfer input speed settings.

Step 2. Decrease the appropriate (Single or Double side) transfer input speed by 0.1.

Step 3. Click **OK**.

Step 4. Print a test card—see Printing a Test Card on page 46.

Step 5. Examine the test card.

- If there is noticeable improvement, repeat Steps 2–4 until the problem is corrected or there is no more improvement.
- If there is no noticeable improvement after a number of cycles, return the value to its default setting and go to next correction.

Decrease Transfer Output Speed

Step 1. From the Card Specifications window, make a note of the default transfer output speed settings.

Step 2. Decrease the appropriate (Single or Double side) transfer output speed by 0.1.

Step 3. Click **OK**.

Step 4. Print a test card—see Printing a Test Card on page 46.

Step 5. Examine the test card.

- If there is noticeable improvement, repeat Steps 2–4 until the problem is corrected or there is no more improvement.
- If there is no noticeable improvement, return the value to its default setting and contact Zebra Technical Support.

Back of card

Increase Back Transfer Temperature

Step 1. From the Card Specifications window, make a note of the default back transfer temperature settings.

Step 2. Increase the appropriate (Single or Double side) back transfer temperature by 5.

Step 3. Click **OK**.

Step 4. Print a test card—see Printing a Test Card on page 46.

Step 5. Examine the test card.

- If there is noticeable improvement, repeat Steps 2–4 until the problem is corrected or there is no more improvement.
- If there is no noticeable improvement after a number of cycles, return the value to its default setting and go to next correction.

Decrease Transfer Input Speed

Step 1. From the Card Specifications window, make a note of the default transfer input speed settings.

Step 2. Decrease the appropriate (Single or Double) transfer input speed by 0.1.

Step 3. Click **OK**.

Step 4. Print a test card—see Printing a Test Card on page 46.

Step 5. Examine the test card.

- If there is noticeable improvement, repeat Steps 2–4 until the problem is corrected or there is no more improvement.
- If there is no noticeable improvement after a number of cycles, return the value to its default setting and go to next correction.

Decrease Transfer Output Speed

Step 1. From the Card Specifications window, make a note of the default transfer output speed settings.

Step 2. Decrease the appropriate (Single or Double) transfer output speed by 0.1.

Step 3. Click **OK**.

Step 4. Print a test card—see Printing a Test Card on page 46.

Step 5. Examine the test card.

- If there is noticeable improvement, repeat Steps 2–4 until the problem is corrected or there is no more improvement.
- If there is no noticeable improvement, return the value to its default setting and contact Zebra Technical Support.

Warpage

Edges curled down

Warpage is usually caused by too much energy being transferred to the card (i.e., the temperatures are too hot or the speeds are too slow), coupled with the card material and the amount of time the card sits before being handled.

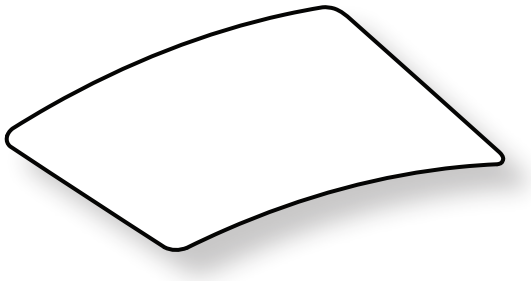

Decrease Back Transfer Temperature

Step 1. From the Card Specifications window, make a note of the default transfer output speed settings.

Step 2. Decrease the appropriate (Single or Double side) back transfer temperature by 5.

Step 3. Click **OK**.

Step 4. Print a test card—see Printing a Test Card on page 46.

Step 5. Examine the test card.

- If there is noticeable improvement, repeat Steps 2–4 until the problem is corrected or there is no more improvement.
- If there is no noticeable improvement after a number of cycles, return the value to its default setting and go to next correction.

Increase Front Transfer Temperature

Step 1. From the Card Specifications window, make a note of the default front transfer temperature settings.

Step 2. Increase the appropriate (Single or Double side) front transfer temperature by 5.

Step 3. Click **OK**.

Step 4. Print a test card—see Printing a Test Card on page 46.

Step 5. Examine the test card.

- If there is noticeable improvement, repeat Steps 2–4 until the problem is corrected or there is no more improvement.
- If there is no noticeable improvement after a number of cycles, return the value to its default setting and go to next correction.

Increase Transfer Output Speed

Step 1. From the Card Specifications window, make a note of the default transfer output speed settings.

Step 2. Increase the appropriate (Single or Double) transfer output speed by 0.1.

Step 3. Click **OK**.

Step 4. Print a test card—see Printing a Test Card on page 46.

Step 5. Examine the test card.

- If there is noticeable improvement, repeat Steps 2–4 until the problem is corrected or there is no more improvement.
- If there is no noticeable improvement, return the value to its default setting and contact Zebra Technical Support.

Edges curled up

Warpage is usually caused by too much energy being transferred to the card (i.e., the temperatures are too hot or the speeds are too slow).

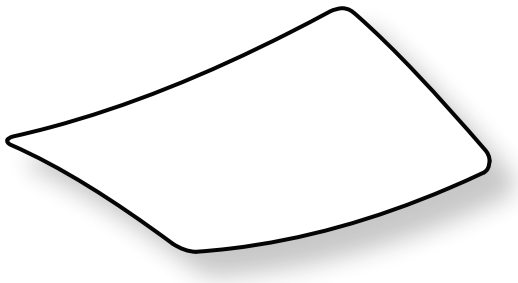

Decrease Front Transfer Temperature

Step 1. From the Card Specifications window, make a note of the default transfer output speed settings.

Step 2. Decrease the appropriate (Single or Double side) front transfer temperature by 5.

Step 3. Click **OK**.

Step 4. Print a test card—see Printing a Test Card on page 46.

Step 5. Examine the test card.

- If there is noticeable improvement, repeat Steps 2–4 until the problem is corrected or there is no more improvement.
- If there is no noticeable improvement after a number of cycles, return the value to its default setting and go to next correction.

Increase Back Transfer Temperature

Step 1. From the Card Specifications window, make a note of the default back transfer temperature settings.

Step 2. Increase the appropriate (Single or Double side) back transfer temperature by 5.

Step 3. Click **OK**.

Step 4. Print a test card—see Printing a Test Card on page 46.

Step 5. Examine the test card.

- If there is noticeable improvement, repeat Steps 2–4 until the problem is corrected or there is no more improvement.
- If there is no noticeable improvement after a number of cycles, return the value to its default setting and go to next correction.

Increase Transfer Output Speed

Step 1. From the Card Specifications window, make a note of the default back transfer temperature settings.

Step 2. Increase the appropriate (Single or Double) transfer output speed by 0.1.

Step 3. Click **OK**.

Step 4. Print a test card—see Printing a Test Card on page 46.

Step 5. Examine the test card.

- If there is noticeable improvement, repeat Steps 2–4 until the problem is corrected or there is no more improvement.
- If there is no noticeable improvement, return the value to its default setting and contact Zebra Technical Support.

Irregular Warpage

Note • Irregular warpage is more common with smart cards.

Warpage is usually caused by too much energy being transferred to the card (i.e., the temperatures are too hot or the speeds are too slow).

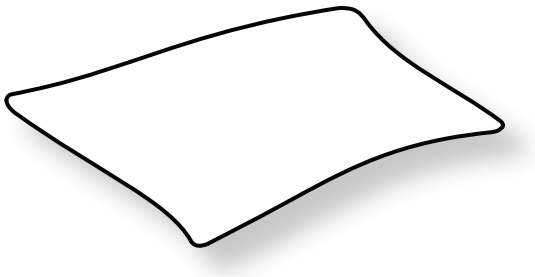

Decrease Front Transfer Temperature

Step 1. From the Card Specifications window, make a note of the default back transfer temperature settings.

Step 2. Decrease the appropriate (single or double side) front transfer temperature by 5.

Step 3. Click **OK**.

Step 4. Print a test card—see Printing a Test Card on page 46.

Step 5. Examine the test card.

- If there is noticeable improvement, repeat Steps 2–4 until the problem is corrected or there is no more improvement.
- If there is no noticeable improvement after a number of cycles, return the value to its default setting and go to next correction.

Decrease Back Transfer Temperature

Step 1. From the Card Specifications window, make a note of the default back transfer temperature settings.

Step 2. Decrease the appropriate (Single or Double side) back transfer temperature by 5.

Step 3. Click **OK**.

Step 4. Print a test card—see Printing a Test Card on page 46.

Step 5. Examine the test card.

- If there is noticeable improvement, repeat Steps 2–4 until the problem is corrected or there is no more improvement.
- If there is no noticeable improvement after a number of cycles, return the value to its default setting and go to next correction.

Increase Transfer Output Speed

Step 1. From the Card Specifications window, make a note of the default transfer output speed settings.

Step 2. Increase the appropriate (Single or Double) transfer output speed by 0.1.

Step 3. Click **OK**.

Step 4. Print a test card—see Printing a Test Card on page 46.

Step 5. Examine the test card.

- If there is noticeable improvement, repeat Steps 2–4 until the problem is corrected or there is no more improvement.
- If there is no noticeable improvement after a number of cycles, return the value to its default setting and go to next correction.

Increase Transfer Input Speed

Step 1. From the Card Specifications window, make a note of the default transfer input speed settings.

Step 2. Increase the appropriate (Single or Double) transfer input speed by 0.1.

Step 3. Click **OK**.

Step 4. Print a test card—see Printing a Test Card on page 46.

Step 5. Examine the test card.

- If there is noticeable improvement, repeat Steps 2–4 until the problem is corrected or there is no more improvement.
- If there is no noticeable improvement, return the value to its default setting and contact Zebra Technical Support.

Flash

Flash is an artifact of the transfer process, that appears like little shards of transfer film. The shards may be clear or colored, depending on the image being printed. Flash may appear on the sides or top of the card.

- If flash is seen on the top of the card, adjust the image placement downward. Use the Print Position adjustment feature in the ZXP Toolbox, located in the Calibration tab. If this does not minimize or resolve the issue, contact Zebra Technical Support.
- If flash is seen on the sides of the card, contact Zebra Technical Support.

Delamination

Delamination is the separation of the card layers and may be caused by using substandard cards. If this occurs, contact Zebra Tech Support.

Ethernet Indicators—Detail

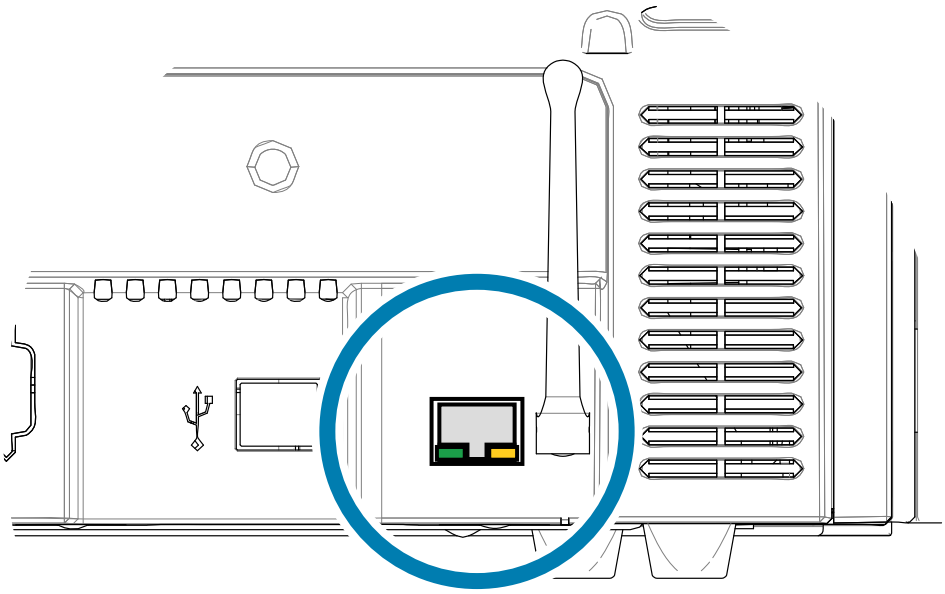

Link/Activity Indicator (Green)

Off	No link (disconnected)
On	Network link has been established
Blinking	Network activity has been detected

Speed Indicator (Orange)

Off	No link (disconnected)
1 Blink	The LED blinks once (one blink, pause, one blink, etc.) when a 10Base link has been established.
2 Blinks	The LED blinks twice (two blinks, pause, two blinks, etc.) when a 100Base link has been established.

If both LEDs are off, the printer has not detected the presence of a network cable. To solve the problem:

Step 1. Verify that the network cable is appropriate and has an RJ-45 connector.

Step 2. Remove the network cable from the printer. Plug the network cable back in until you hear a positive click. Check the other end of the cable in the same manner. If the printer still does not detect a cable, then continue.

Step 3. Connect the printer to a known good network. If the printer is still unable to detect the network cable, contact Technical Support for assistance.

Network Operations

This chapter covers connecting the ZXP Series 9 to a network using Windows; connecting the printer to a wireless network via the browser console resident in the printer, and via the operator control panel (OCP); setting up printer pooling and printer sharing.

Printer Connections

Card printers can be connected to an Ethernet network in three ways.

Printer Sharing

In printer sharing, the printer is connected locally to the host computer and configured to be shared to other client computers. Client computers connect to the printer over the network through the host computer.

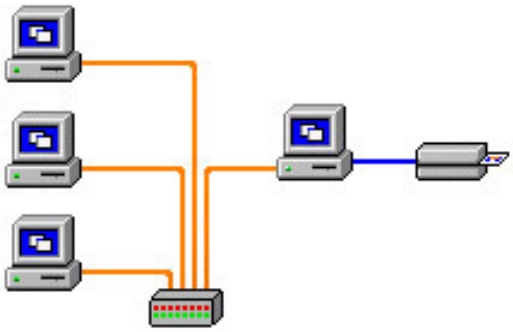

External Print Server

A stand alone device that acts as a server on the network specifically for receiving print jobs and passing them to the printer. Client computers connect to the print server over a network.

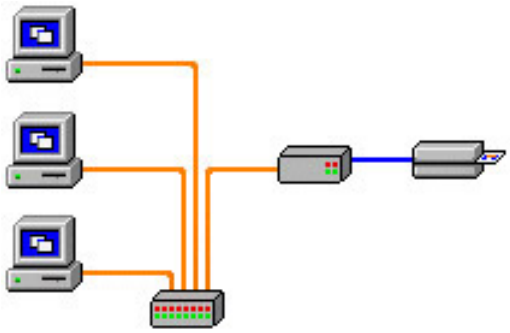

Internal Print Server

Similar to an external print server, except the print server is integrated into the printer. This removes the need for a separate power supply and separate device drivers. This is the simplest way to network a printer.

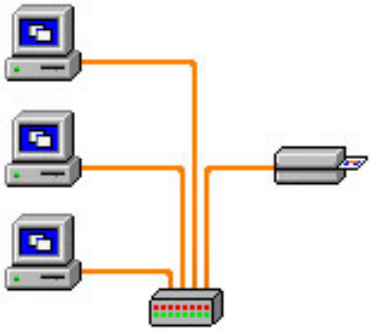

Adding a Network Printer (Windows 7)

Use this procedure if you have already installed an Ethernet printer on your system and you want to install a second Ethernet printer on the network.

Step 1. Click on Start and select **Devices and Printers**.

Step 2. Click **Add a printer**.

Step 3. Select **Add a local printer,** then click **Next**.

Step 4. Select **Create a new port** and then select **Standard TCP/IP Port** from the drop-down menu. Click **Next**.

Step 5. Enter the IP address of your printer in the Hostname or IP address text box. Note that the port name will automatically be filled in when you enter the IP Address. Do not change the port name. Ensure that the **Query the printer ...** checkbox is selected. Click **Next**.

Step 6. Select the Manufacturer and the Printer, then click **Next**.

Step 7. Select the **Use the driver that is currently installed** radio button, then click **next**.

Step 8. Enter the printer name: use the default name, or add more information to indicate the printer location (e.g., Ed's Printer, Mike's Office, Room 33, etc.). Click **Next**.

Step 9. If appropriate, select the **Set as the default printer** checkbox. Click **Finish**.

For setup on other operating systems, please refer to your system help content.

Wi-Fi Connectivity

A printer with the wireless option ships with the wireless radio pre-installed in the printer. An antenna is shipped in the box with the printer. The antenna must be connected to the rear of the printer before using the wireless interface.

Lightly push the antenna onto the printer antenna connector, and rotate the knurled antenna connector until finger tight. Do not use tools to tighten the antenna.

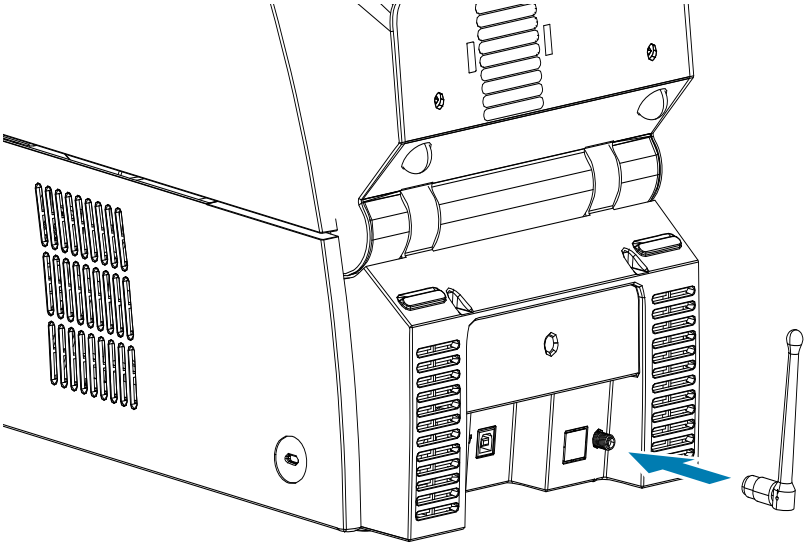

The antenna orientation is important to maximize the wireless signal strength. Inspect the access point antenna(s), and try to put the printer antenna in a similar orientation. After connecting the printer to the wireless network, the antenna orientation can be adjusted to maximize signal strength. As the distance between the printer and the access point increases, the signal strength decreases. If there are intervening walls, unpredictable signal strength attenuation will occur. Decreasing signal strength results in automatic data rate reduction. At the longest distance, wireless traffic can be very slow.

Printer location is important to ensure that adequate signal strength is achieved. Follow these suggestions:

- Position the printer as close to the access point that it will connect to as possible.
- If possible, orient the printer such that there is a clear line of sight between the printer antenna and the access point antenna.
- Locate the printer such that there are no intervening walls in the line of sight between the antennas.
- Do not put the printer in a cabinet, especially not a metal one.
- Do not locate large metal objects close to the printer antenna.
- Do not locate the printer close to devices that emit RF radiation in the 2.4 GHz range; such devices might include: microwave ovens, cordless phones, wireless surveillance cameras, baby monitors, wireless video transmitters and Bluetooth devices, etc.

Description

Communication

To connect to a wireless network, the printer uses wireless protocol IEEE 802.11b/g that communicates data through radio transmission and can talk to Access Points that are either 802.11b or 802.11g compliant.

The wireless printer communicating over 802.11b radio:

- Allows nominal data rates over the air of 11 Mbps as per 802.11b standard.
- Supports automatic rate adaption starting at 11 Mbps and going down as low as 1 Mbps for maximum range and optimal throughput depending on signal strength.

The wireless printer communicating over 802.11g radio:

- Allows nominal data rates over the air of 54 Mbps as per 802.11g standard.
- Supports automatic rate adaption starting at 54 Mbps and going down as low as 6 Mbps for maximum range and optimal throughput depending on signal strength. The 802.11g standard is backwards compatible and, if the 802.11b rates are configured, will automatically decrease to a 802.11b rate as necessary.

Security

The wireless printer supports Open System authentication only.

The wireless printer supports the following security features:

- Wired Equivalent Privacy (WEP)
- Wi-Fi protected access (WPA/WPA2)

Encryption

The wireless printer supports the following encryption protocols:

- RC4 (applicable to WEP)
- TKIP (applicable to WPA)
- CCMP (a form of AES encryption applicable to WPA2)

The ZXP Series 9 Card Printer supports the Personal mode of dynamic encryption key deployment, Personal Shared Key (PSK).

Configuration

You can use a USB or wired Ethernet cable to configure the printer for a wireless network.

The wireless printer can be configured using the Operator Control Panel, the Printer Web Page (see next page), or the Toolbox application.

Setup via Browser Console

This section explains how to connect your ZXP Series 9 to a wireless network via your Web Browser.

Minimum Requirements

- Wired Ethernet environment with a DHCP Server (used to set up wireless parameters).
- Wireless Network environment to include:
  - Wireless Router or Access Point enabled for 2.4 GHz operation
  - Access point Passphrase or Password
  - SSID (network name)
- Computer with:
  - Wired Ethernet connection to the Network
  - Ethernet cable(s)
- ZXP Series 9 Card Printer with the wireless option installed

Configuration

Step 1. Connect the printer to your wired network, and turn the power on.

Step 2. Retrieve the IP address of the printer—from the operator control panel (OCP), select **Info** and scroll to the Network Info page—see Info Menu on page 52.

Step 3. Start your web browser.

Step 4. In the browser address bar, enter the IP address of the printer—the printer configuration page will open.

Step 5. Click the **Wireless Parameters** tab.

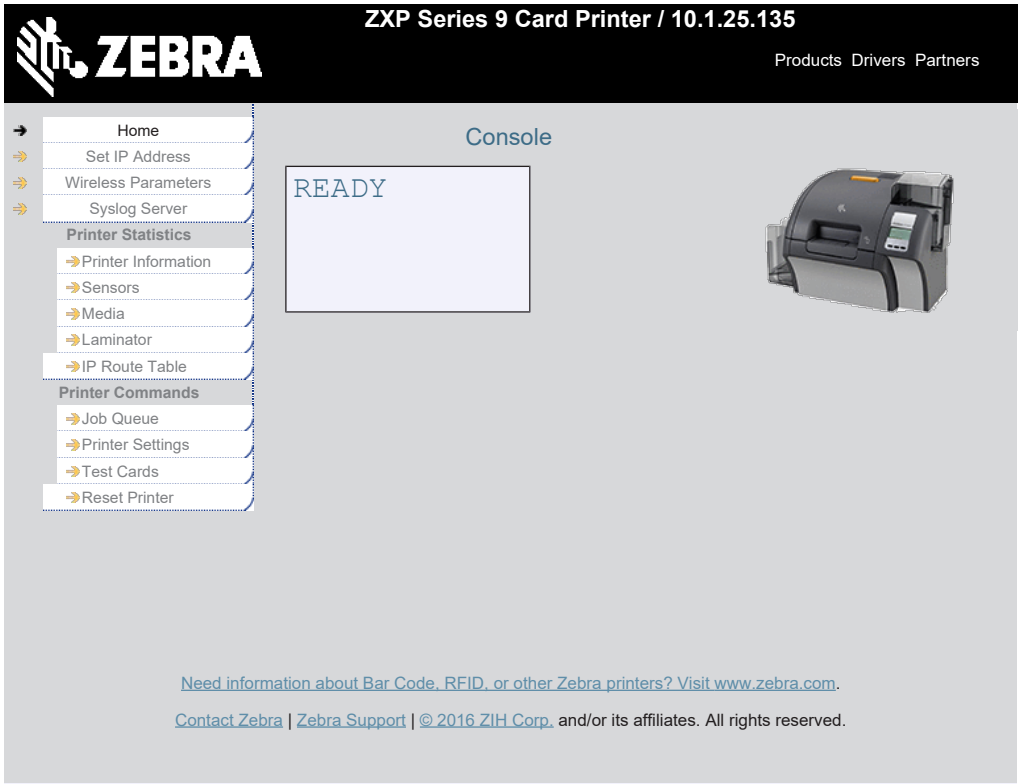

Step 6. In the Windows Security dialog box, type **admin** into the User name field and type **1234** into the Password field (these may be changed by the user as necessary). Click **OK.**

Step 7. The **Choose Wi-Fi Connection** page will be displayed. Click **Scan for Wireless Networks**.

Step 8. The expanded Choose Wi-Fi Connection page will be displayed. Select the radio button of the desired network and click **Connect to Selected Wireless Network**.

Note that if the network you are looking for is not displayed, first click the **Scan for Wireless Networks** button. If the desired network is still not displayed, click the **Update Scan for Wireless Networks** button until the network appears.

Step 9. When the Load Access Point Attributes page appears, enter the network Passphrase and click **Connect**.

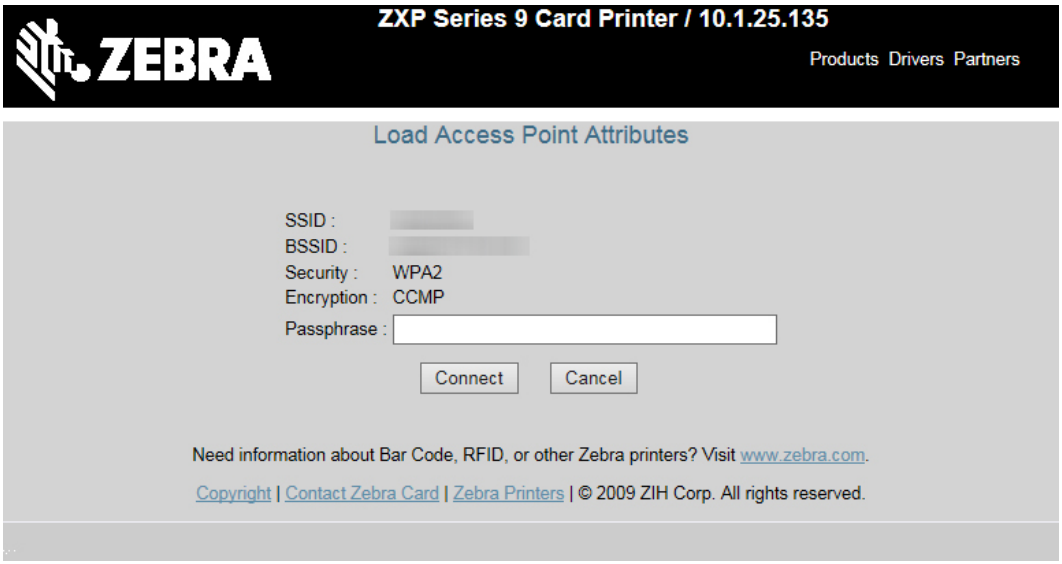

Step 10. When successfully connected to the wireless network, the Input Accepted page will appear.

Step 11. Close the browser console.

Setup via OCP

This section explains how to connect your ZXP Series 9 to a wireless network via the operator control panel (OCP).

Minimum Requirements

- Wireless Network environment to include:
  - Wireless Router or Access Point
  - Access point Passphrase or Password
  - SSID
- ZXP Series 9 Card Printer with the wireless option installed

Configuration

Step 1. From the OCP Main Menu, select **Wireless Settings**—see Wireless Settings Menu on page 59.

Step 2. Select **Setup Wizard**.

Step 3. The OCP will prompt you for it to begin scanning for accessible wireless networks—select **Scan** to begin.

Step 4. After the scan is complete, the OCP will display the accessible wireless networks one-by-one. Select **Next** to cycle through the networks, when the desired network is displayed, select **Select** to connect to that network.

Step 5. Enter the network passphrase by cycling through each character by pressing **Change**. When the correct character is displayed, press **Next** to proceed to the next character.

Step 6. When all the required characters have been entered, select **Connect** to complete the setup wizard.

Printer Pooling

Setting Up Printer Pooling (Windows 7)

Printer pooling is a standard feature of Windows, which lets you spread your printed output across a pool of several printers.

Step 1. Before proceeding to pool any number of printers, test them individually to be sure they are configured similarly. Specifically, check the following:

- Ribbon panel configuration (ribbon type, and what prints on which side of the card).
- Mag encoding configuration.
- Black extraction configuration (if applicable).

Step 2. From the Start menu select **Devices and Printers**. Right click on the ZXP Series 9 Card Printer and select **Properties**, then select the **Ports** tab.

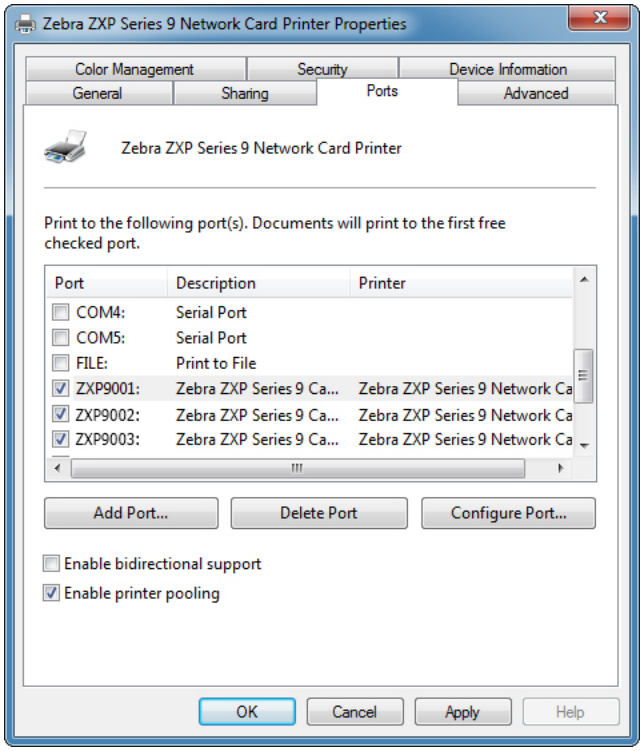

Step 3. Select the desired printers by clicking on the associated checkbox.

Step 4. Select the **Enable printer pooling** checkbox.

For setup on other operating systems, please refer to your system help content.

Using the Printer Pool

Note • Send print jobs to the printer pool, not to an individual printer.

When the first printer has taken as many jobs as it can handle (that being two jobs—one to be printed immediately, the other waiting), the following jobs “spill over” to the second printer, and then to the third printer.

Note that if you are only printing two jobs, they would both go to the first printer. Pooling is a spill-over methodology. It does not balance printer usage.

Once the pool has been set up, maintenance and configuration changes should be done through the menus for each individual printer, not through the pool (which can produce undesirable results).

Note • The effect of any maintenance and/or changes can (and should) be tested by sending print jobs separately to each printer, not to the pool.

Printer Sharing

Refer to Supported Sharing Combinations on page 35.

Setting Custom Card Specifications

Introduction

This section describes how to set up specifications for a card type that is not pre-defined in the Printing Preferences Control panel.

The Printing Preferences Control Panel enables you to set up two custom card types.

If you need help setting the specifications for your card type, contact the Zebra Card Testing Service at 866-569-9086 (Toll Free), or cardtestingservice@zebra.com.

Process

Step 1. Windows 7: Select Start > Devices and Printers, right click the ZXP Series 9 Card Printer, and select **Printing preferences** from the pop-up menu.

Windows 8: Right-click the screen's bottom-left corner (or press Windows+I) and choose Control Panel from the pop-up menu, right click the ZXP Series 9 Card Printer, and select **Printing preferences** from the pop-up menu.

Windows 10: Select the Start menu and then select Settings > Devices, right click the ZXP Series 9 Card Printer, and select **Printing preferences** from the pop-up menu.

Step 2. From the Card Setup tab, click the **Card type in use** drop-down menu and select **Custom 1** or **Custom 2**.

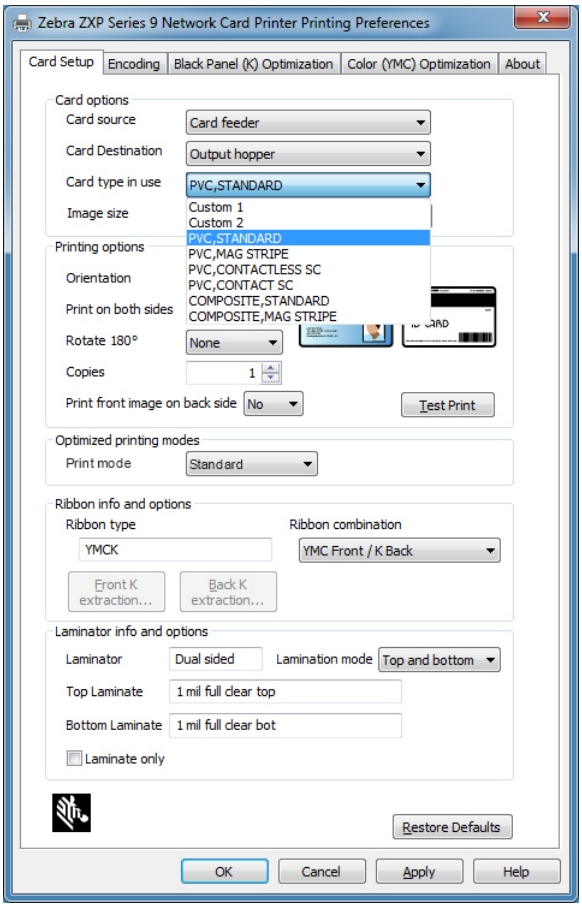

Step 3. The Card Specifications window will appear. Enter a name in the **Card type** dialog box.

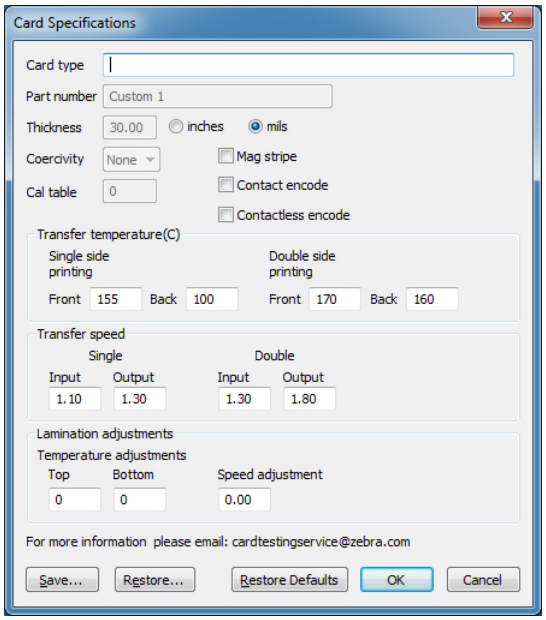

Step 4. Select the encoding type for the card: Mag stripe, Contact, or Contactless.

Step 5. Make the necessary transfer temperature and speed adjustments—see Adjustments on page 87 and click **OK**.

Step 6. Make any necessary temperature and speed adjustments to the laminator (if equipped).

Step 7. Print and examine a Test Card—see Printing a Test Card on page 46**.** The quality of the test card will determine whether or not to continue the process.

Step 8. If the result is satisfactory, click **Save** to save the current configuration. If the result is not satisfactory, go to Step 5.

Step 9. Click **Restore Defaults** to start over with the default settings.

Magnetic Card Encoder

Introduction

The magnetic encoder can be set for either high or low coercivity, which must match the cards being used. Use the Printing Preferences Control Panel to change the encoder setting.

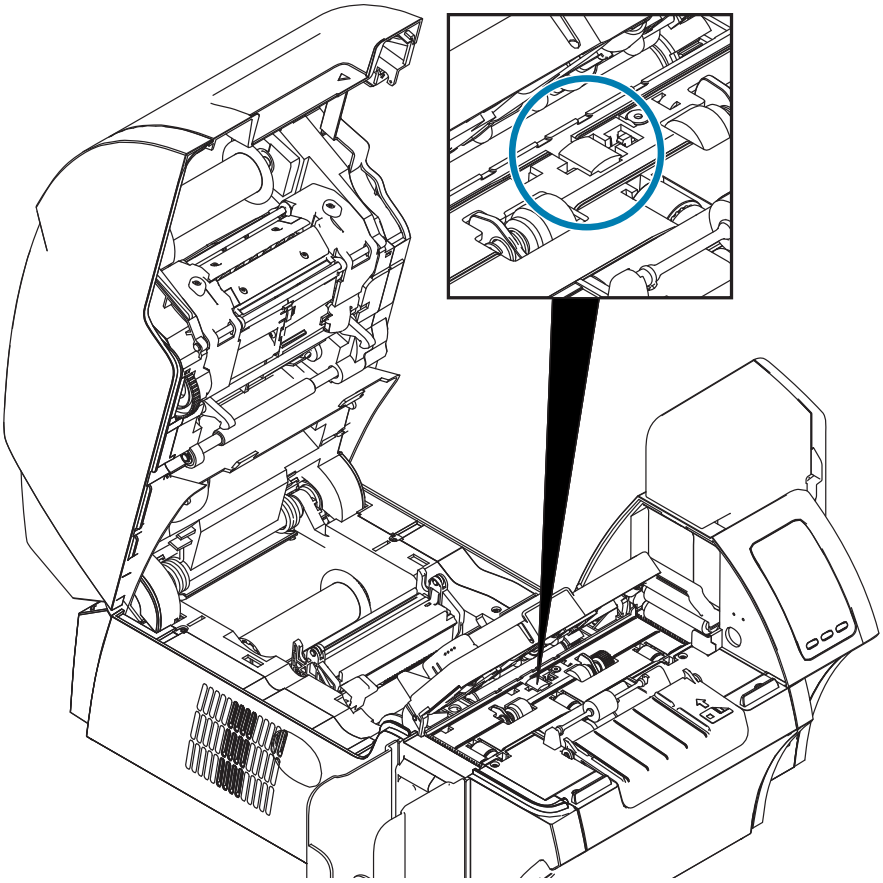

Ribbon Selection

Use a YMCKI or YMCKKI ribbon—this ribbon type has an inhibit panel which prevents printing over the mag strip on the back of the card.

Driver Setting

The Printing Preferences Control Panel enables the user to specify the magnetic encoder card type in use. Based on the selection, the printer makes automatic adjustments to optimize performance. Additionally, the control panel enables the user to set various magnetic encoding options.

Step 1. Windows 7: Select Start > Devices and Printers, right click the ZXP Series 9 Card Printer, and select **Printing preferences** from the pop-up menu.

Windows 8: Right-click the screen's bottom-left corner (or press Windows+I) and choose Control Panel from the pop-up menu, right click the ZXP Series 9 Card Printer, and select **Printing preferences** from the pop-up menu.

Windows 10: Select the Start menu and then select Settings > Devices, right click the ZXP Series 9 Card Printer, and select **Printing preferences** from the pop-up menu.

Step 2. From the Card Setup tab, click the **Card type in use** drop-down menu and select the appropriate card.

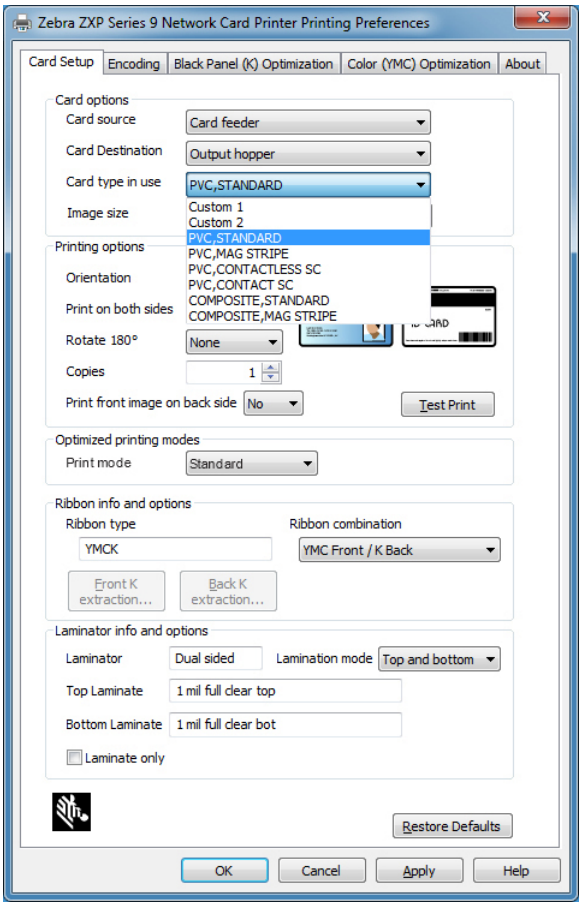

Step 3. From the Encoding tab, click the **Magnetic encoding type** drop-down menu and select the appropriate format.

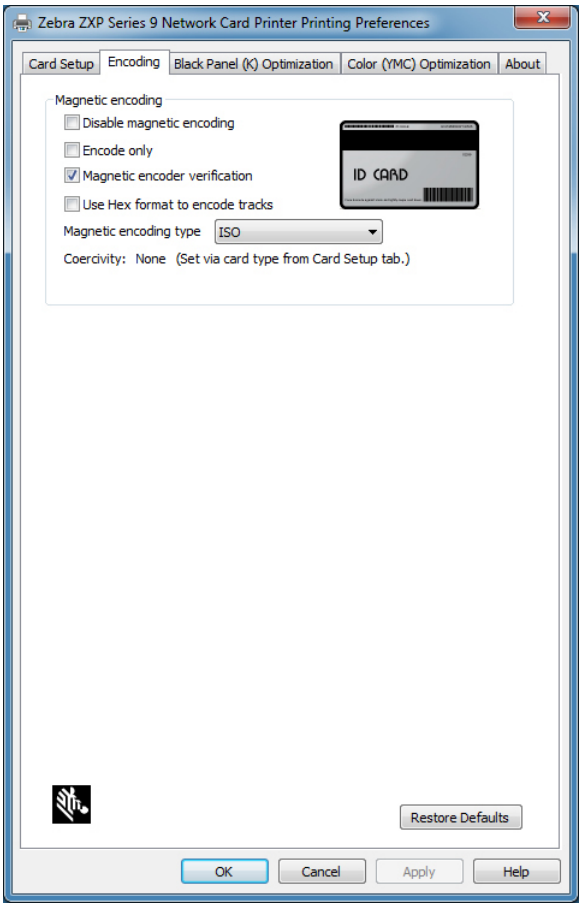

Step 4. Click **Apply**.

Step 5. Click **OK** to close.

Media Loading Orientation

Note • ONLY USE cards that comply with ISO 7810 and 7811 standards for magnetic stripe cards. The magnetic stripe must be flush to the surface of the card to work properly. Never use cards which have taped-on magnetic stripes.

Place the cards in the input hopper with the magnetic stripe down and facing to the rear (as shown). For manual card feed, insert the card into the manual feed slot with the magnetic stripe down and toward the printer (as shown).

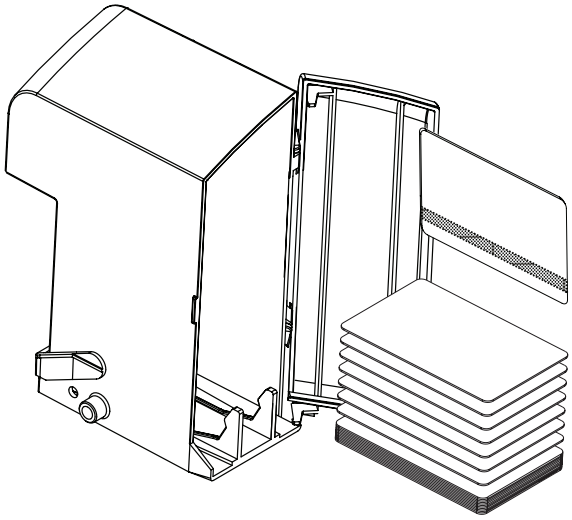

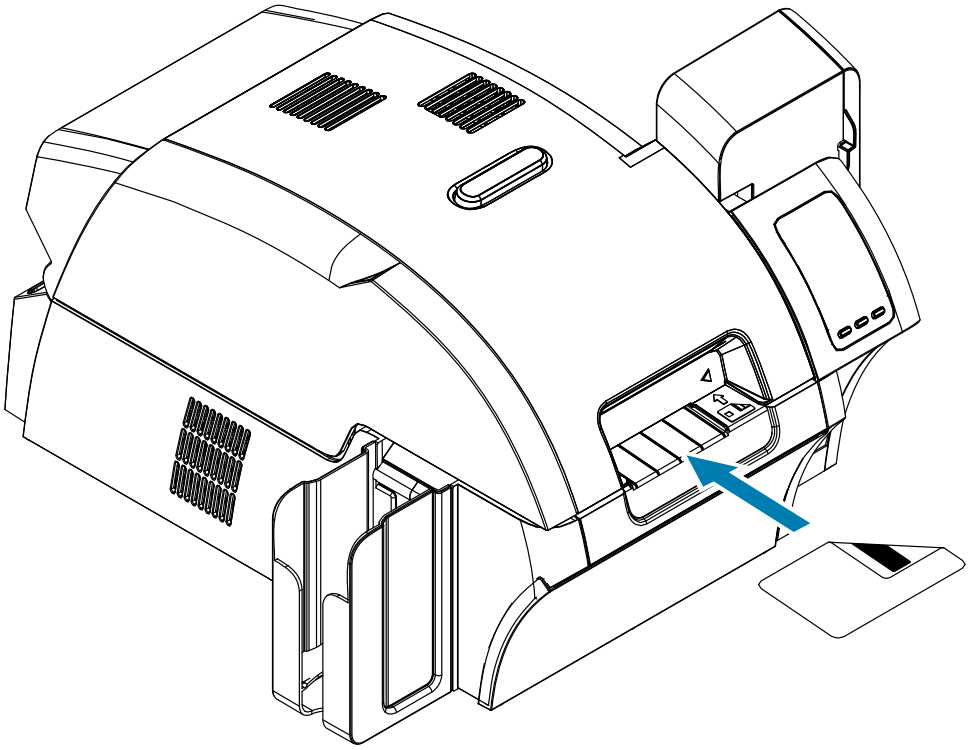

Magnetic Encoding Type

ISO (Default)

The encoder reads and writes standard ISO track data formats in standard ISO track locations. The following shows the three standard ISO tracks.

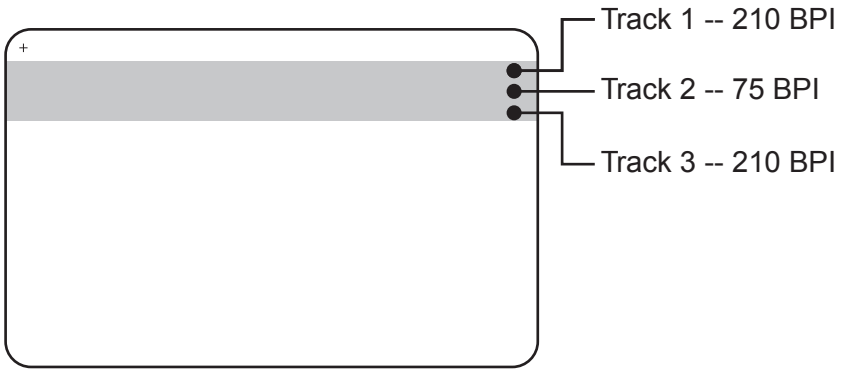

Each track can be encoded and decoded with ASCII characters in the standard default ISO data formats:

Track	Density (bits per inch)	Bits per character	Character parity	Length (char)	LRC parity	Start sentinel	End sentinel	Start sentinel offset inches (mm)
1	210	7	Odd	76	Even	%	?	0.293” (7.4)
2	75	5	Odd	37	Even	;	?	0.293” (7.4)
3	210	5	Odd	104	Even	;	?	0.293” (7.4)

The magnetic encoder can read or encode up to 3 tracks of digital information onto CR-80 cards incorporating a HiCo or LoCo magnetic stripe in the ISO 7811 format.

Encoding for the three tracks uses the ISO 7811 format.

- Track 1 uses 210 BPI (bits per inch) encoding in the International Air Transport Association (IATA) format of 79 alphanumeric characters, at 7 bits per character.
- Track 2 uses 75 BPI encoding to store 40 numeric characters at 5 bits per character in American Banking Association (ABA) format.
- Track 3 uses 210 BPI encoding of 107 numeric characters at 5 bits per character in THRIFT format.

The ISO data formats include a preamble (all zeros), a start character, data (7-bit or 5-bit as specified by ISO), a stop character, and a longitudinal redundancy check (LRC) character. The 7-bit data format has 6 bits of encoded data and a parity bit. The 5-bit data format has 4 bits of encoded data and a parity bit.

The ISO data formats include a data field separator (or delimiter) that allows parsing of the encoded track data. An example of separate data fields would be the ABA data format (Track 2) that includes a Primary Account Number (PAN) field and an account information field (for expiration date, country code, etc.).

AAMVA

The data stored on magnetic stripes on American driver's licenses is specified by the American Association of Motor Vehicle Administrators (AAMVA).

Alpha-numeric characters on Tracks 1 and 3, numerals only on Track 2.

Track	Density (bits per inch)	Bits per character	Character parity	Length (char)	LRC parity	Start sentinel	End sentinel	Start sentinel offset inches (mm)
1	210	7	Odd	79	Even	%	?	0.293" (7.4)
2	75	5	Odd	37	Even	;	?	0.293" (7.4)
3	210	7	Odd	79	Even	%	?	0.293" (7.4)

CUSTOM

If a custom format is desired, the ISO standard format may be used as a starting point. The standard format can then be modified by assigning different values to any or all of the density, character, and sentinel attributes. (If any of these attributes is missing, its corresponding value in the standard ISO format will be substituted.)

BINARY

The binary option allows the user to specify directly the value for each bit on the mag stripe.

In this "direct binary" mode, it is the host's responsibility to fully populate the magnetic stripe; i.e., the hex data provided by the host must include the leading zeros, start sentinel, data, end sentinel, LRC, and trailing zeros. Note that the magnetic stripe is encoded from the right-hand end as viewed from the "stripe" side, with the stripe uppermost. The least significant bit of the data is encoded first.

A sufficient number of leading zeros should be prepended to offset the start sentinel by approximately 0.3" (7.5 mm) from the right-hand end, as in the ISO format. Care should be taken to ensure that the payload data does not exceed the capacity of the tracks at their specified recording densities. (In the binary mode, out-of-range data is not recorded, and no error condition will result.)

A CR-80 size card has a nominal capacity of 252 bits per track at 75 BPI, and 708 bits at 210 BPI. These capacities equate approximately to 31 hex bytes (248 binary bits) and 88 hex bytes respectively.

The application developer or user can use a preamble or Macro to indicate to the driver that the data following the Preamble or Macro is to be mag encoded.

The user can have encoding and printing data on the same card, and the driver will filter out the encoding data from the printing data. The user does not have to know job control syntax or ZMotif commands to send mag encoding commands to the printer.

Supported Macro commands are:

Step 1.	C01<Track1 Data>	**Step 2.**	${1<Track1 data>}$	**Step 3.**	~1=<Track1 data>
	C02<Track2 Data>		${2<Track2 data>}$		~2=<Track2 data>
	C03<Track3 Data>		${3<Track3 data>}$		~3=<Track3 data>

Laminating Mag Cards

Note • Since partial-width laminates are only used for the back (i.e., lower) surface of the card, this section only applies to the double-sided laminator.

Laminates come in three widths:

- Full-Width laminate is 2 inches (51 mm) wide. The full-width laminate is used on the front (i.e., upper) or back (i.e., lower) surface of the card.
- “Partial-Width” laminate is available as 1.33 inch (33 mm) wide (used for cards with a magnetic stripe).

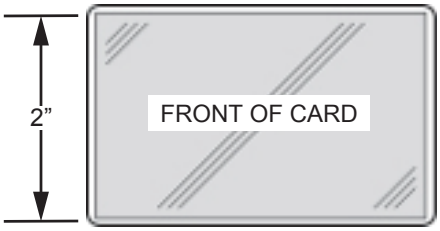

Full Width

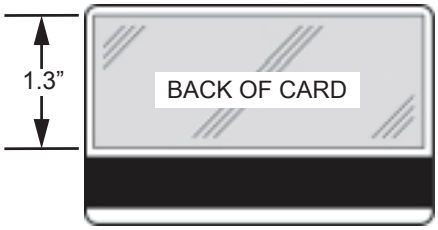

Magnetic Stripe

Step 1. Remove the lower laminate cassette.

Step 2. Open the cassette, and remove the laminate if present.

Using Partial-Width Laminate

Refer to Replacing the Laminate on page 23.

Smart Card Encoder

Introduction

Smart cards can have a built-in microcomputer and/or memory to store fingerprints, voice recognition patterns, medical records, and other such data. All other printer operations remain the same as the standard models.

Contact smart cards have a pad of contacts on the surface of the card that connect to the circuitry embedded into the card.

The printer responds to commands that position the card at the contact location, where the printer connects to the contacts on the smart card. Data to be encoded onto the smart card, and data read from the smart card, can interface via a connector on the printer's rear panel (contact station), or encoding/decoding can be performed by logic on the printer's main PCBA (contact encoder).

Rather than using a contact pad, contactless smart cards use various short-range radio technologies to "connect" to the printer. The printer moves the card to an antenna location on he card path, and the encoding or decoding occurs.

All other printer operations remain the same.

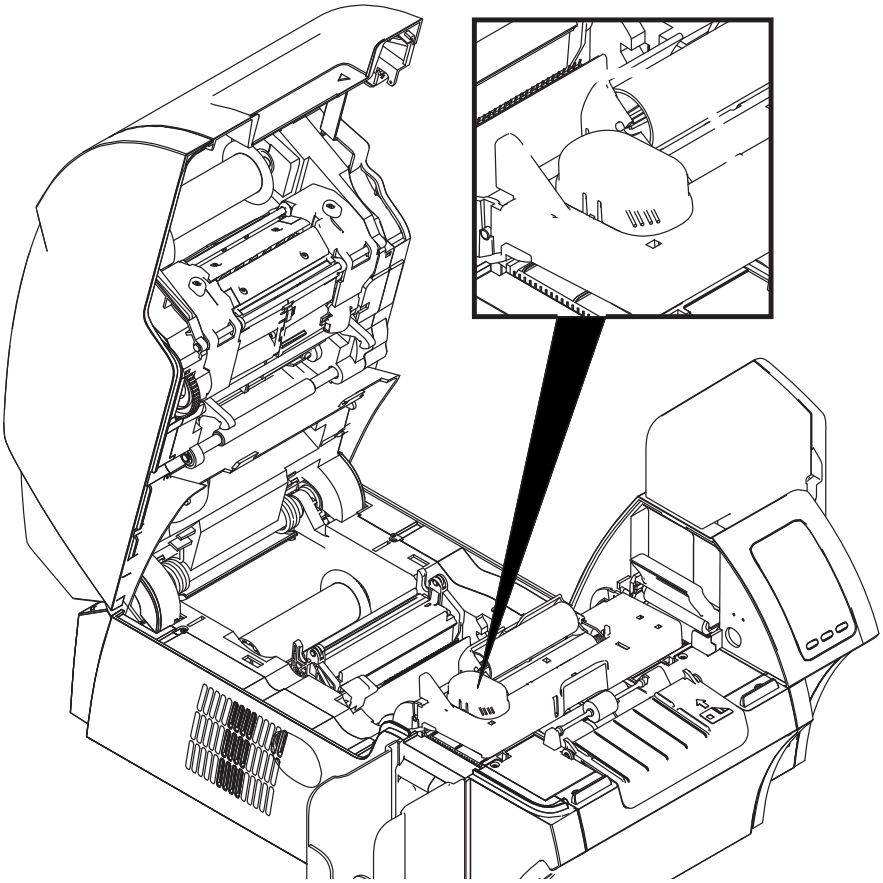

Ribbon Selection

Contact Smart Cards

There are no special ribbons to make considerations for the smart card contact. When designing the card, make sure the graphics or any other printed element does not occupy the space of the smart card contact.

Printing on Contactless Smart Cards

With reverse transfer printing technology, there are no restrictions when designing material to be printed on contactless smart cards.

Driver Setting

Encoding data onto smart cards and reading the data previously encoded on them is totally under control of the application software. No operator action is required.

The Printing Preferences Control Panel enables the user to specify the smart card type in use. Based on the selection, the printer makes automatic adjustments to optimize performance.

Step 1. Windows 7: Select Start > Devices and Printers, right click the ZXP Series 9 Card Printer, and select **Printing preferences** from the pop-up menu.

Windows 8: Right-click the screen's bottom-left corner (or press Windows+I) and choose Control Panel from the pop-up menu, right click the ZXP Series 9 Card Printer, and select **Printing preferences** from the pop-up menu.

Windows 10: Select the Start menu and then select Settings > Devices, right click the ZXP Series 9 Card Printer, and select **Printing preferences** from the pop-up menu.

Step 2. From the Card Setup tab, click the **Card type in use** drop-down menu and select the appropriate card.

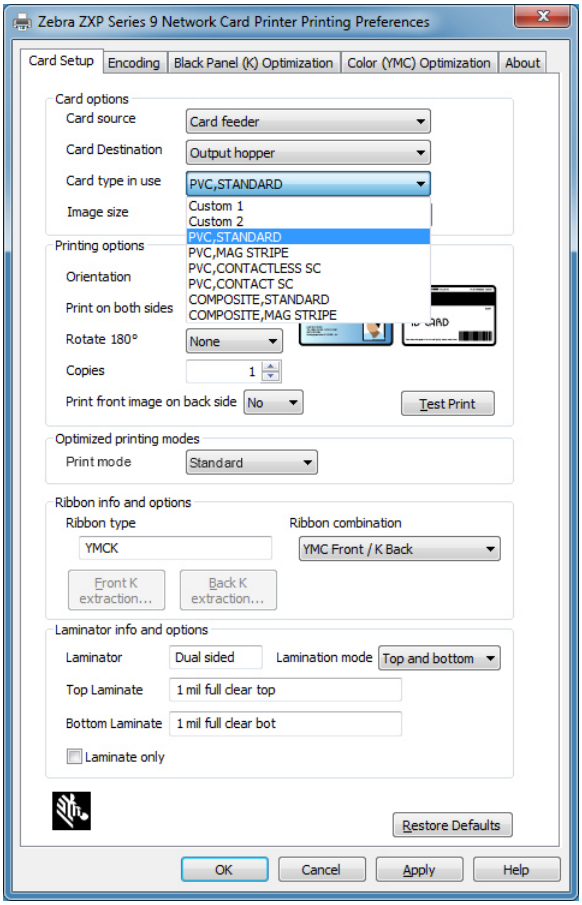

Step 3. Click **Apply**.

Step 4. Click **OK** to close.

Media Loading Orientation

Contact Smart Cards

Place the cards in the input hopper with the gold-plated smart card contacts at the top surface of the card and facing to the left (as shown).

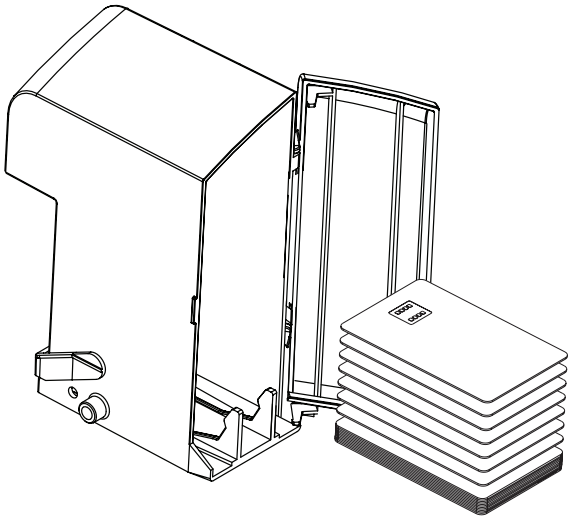

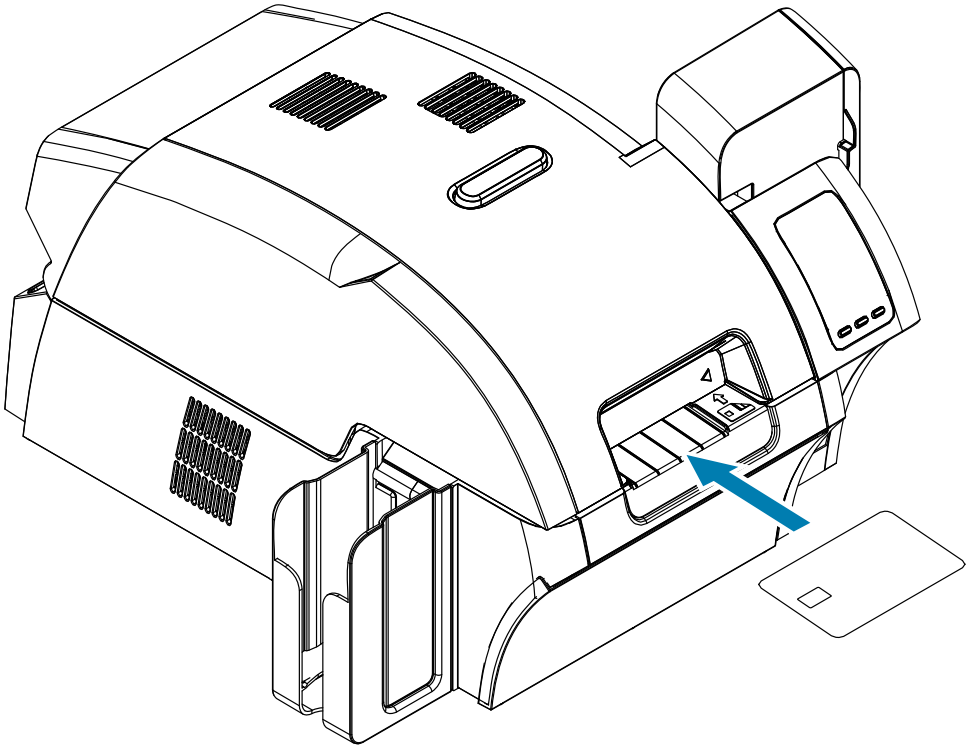

Contactless Smart Cards

For contactless smart cards, orientation is not a consideration.

Contact Station Smart Card Interface

When a command to the printer interface sends a card to the smart card contact station, the printer connects the smart card contact station to the female DB-9 connector on the rear of the printer.

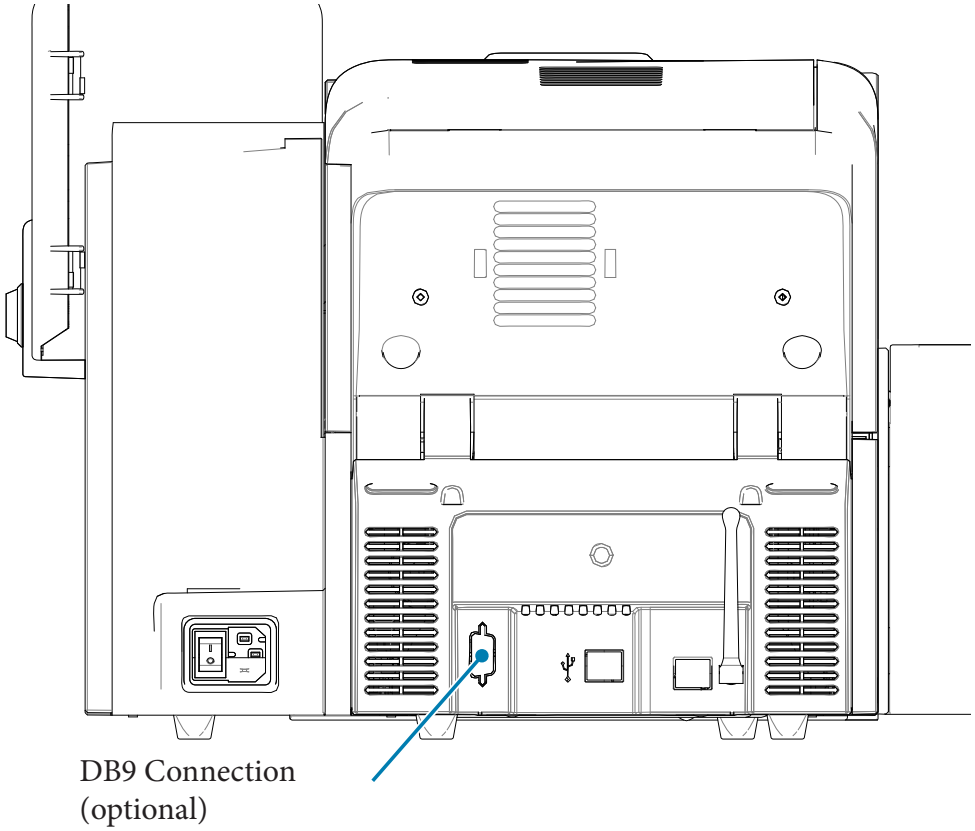

An attached external smart card programmer can be used to program smart card chips. The following table shows the smart card contact points.

Pin	Smart Card Contact Points	DB-9	Smart Card Contact Points
1	C1 (VCC)	6	C6 (Vpp)
2	C2 (Reset)	7	C7 (I/O)
3	C3 (Clock)	8	C8 (RFU)
4	C4 (RFU)	9	(GND when chip is at station)
5	C5 (GND)		

Laminating Contact Smart Cards

Refer to Laminating Contact Smart Cards on page 28.