DASCOM

User Manual

DC-7600 Card Printer

Important Safety Instructions (English)

Read the following instructions thoroughly before starting up your printer.

• Never carry out maintenance or repair work yourself. Always contact a qualified service technician.

• Keep this Operator's Manual in a place which is easily accessible at all times.

• Place the printer on a solid and even base so that it cannot fall.

• Never place the printer in the vicinity of inflammable gas or explosive substances.

• Ensure the printer is connected to a socket with the correct mains voltage.

• Always disconnect the printer from the mains before opening the device to perform maintenance work or remedy errors.

• Do not expose the printer to high temperatures, direct sunlight or dust.

• Keep all liquids away from the printer.

• Protect the printer from shock, impact and vibration.

• Make sure that both of the printer and the computer are switched off before connecting the data cable.

• The print head will become very hot during printing; avoid contact with the print head after printing has finished.

• Do not perform any operation or action in any way other than those provided in this manual. When in doubt, contact your Dascom dealer or your customer support.

Wichtige Sicherheitshinweise (German)

Lesen Sie bitte diese Sicherheitshinweise durch, bevor sie den Drucker in Betrieb nehmen.

- Führen Sie Wartungsarbeiten und Reparaturen keinesfalls selbst aus, sondern verständigen Sie immer einen qualifizierten Servicetechniker.
- Bewahren Sie diese Dokumentation an einem jederzeit zugänglichen Ort auf.
- Den Drucker auf stabilem und ebenem Untergrund so aufstellen, dass er nicht zu Boden fallen kann.
- Stellen Sie den Drucker keinesfalls in der Nähe von leicht entzündlichen Gasen oder explosiven Stoffen auf.
- Den Drucker nur an eine Steckdose mit der richtigen Spannung anschließen.
- Wenn Sie den Drucker vom Netz trennen wollen, den Drucker ausschalten und immer den Netzstecker an der Steckdose ziehen.
- Den Drucker weder hohen Temperaturen noch direktem Sonnenlicht und Staub aussetzen.
- Keine Flüssigkeiten mit dem Drucker in Berührung bringen.
- Den Drucker keinen Erschütterungen, Stößen oder Vibrationen aussetzen.
- Sicherstellen, dass der Drucker und der Computer ausgeschaltet sind, bevor das Datenkabel angeschlossen wird.
- Der Druckkopf wird während des Druckens heiß. Vor dem Berühren deshalb einige Zeit abkühlen lassen.
- Weichen Sie bei der Bedienung des Druckers nicht von den Anweisungen in der Dokumentation ab. Bei Unklarheiten wenden Sie sich bitte an Ihren Händler oder Ihren Kundendienst.

Consignes importantes de sécurité (French)

Lire attentivement les instructions suivantes avant de mettre l'imprimante en service.

- Ne jamais effectuer soi-même les travaux d'entretien et de réparations. Contacter toujours un dépanneur qualifié.
- Placer l'imprimante sur un support stable de façon à ce qu'elle ne puisse pas tomber.
- Ne jamais placer l'imprimante à proximité de sources de gaz aisément inflammables ou de substances explosives.
- Ne connecter l'imprimante à une prise que lorsque la tension est correcte.
- Pour déconnecter l'imprimante de l'alimentation principale, mettre l'imprimante hors tension et toujours débrancher le connecteur secteur de la prise murale.
- Ne pas exposer l'imprimante à des températures élevées, à la lumière directe du soleil ou à la poussière.
- Ne pas mettre l'imprimante en contact avec des liquides.
- Ne pas exposer l'imprimante à des chocs, impacts ou vibrations.
- S'assurer que l'imprimante et l'ordinateur sont hors tension avant de connecter le câble de données.
- La tête d'impression est brûlante pendant l'impression. C'est pourquoi laissez-la refroidir quelques instants avant d'y toucher.
- N'exécutez aucune opération ni action d'une autre manière que celle indiquée dans ce manuel. En cas de doute, veuillez contacter votre distributeur ou service après-vente.

Indicazioni di sicurezza importanti (Italian)

Prima di mettere in funzione la stampante, leggere attentamente le seguenti indicazioni.

Non eseguire mai da sé gli interventi di manutenzione e riparazione, ma rivolgersi sempre a un tecnico di assistenza qualificato.

- Conservare le presenti istruzioni per l'uso in un luogo sempre accessibile.
- Collocare la stampante su una superficie stabile, per evitare che cada a terra.
- Non collocare la stampante in prossimità di gas facilmente infiammabili o di sostanze esplosive.
- Collegare la stampante a una presa di corrente con tensione adeguata.
- Per scollegare la stampante dalla rete di alimentazione, spegnere la stampante e disinserire sempre il connettore di rete dalla presa.
- Non esporre la stampante ad elevate temperature né alla luce solare diretta e alla polvere.
- Evitare il contatto della stampante con liquidi.
- Non esporre la stampante a colpi, scosse o vibrazioni.
- Verificare che la stampante e il computer siano spenti prima di collegare il cavo di trasmissione dati.
- Durante la stampa, la testina si surriscal-da notevolmente. Prima di toccarla, se necessario opportuno quindi lasciarla raffreddare qualche istante.
- Non eseguire alcuna operazione o azione se non nella maniera descritta nel presente manuale. In caso di dubbio, contattare il rivenditore o dalla società incaricata dell'assistenza.

Instrucciones de seguridad importantes (Spanish)

Lea las siguientes instrucciones con esmero antes de poner la impresora en servicio.

Nunca lleve a cabo trabajos de mantenimiento o reparación Ud. mismo, sino consulte a un técnico de servicio calificado.

- Guarde las presentes instrucciones de servicio en un lugar de fácil acceso en cualquier momento.
- Ponga la impresora sobre un base estable de manera que no pueda caer al suelo.
- Nunca coloque la impresora en la vecindad de gases de fácil inflamabilidad o sustancias explosivas.
- Asegure conectar la impresora sólo a un enchufe con un voltaje correcto.
- Cuando quiera desconectar la impresora de la red, apague la impresora y siempre tire la clavija de alimentación del enchufe.
- No exponga la impresora a temperaturas altas, a la luz solar directa y al polvo.
- No ponga la impresora en contacto con fluidos.
- Nunca exponga la impresora a sacudidas, choques o vibraciones.
- Asegúrese de que la impresora y el ordenador estén apagdos antes de conectar el cable de datos.
- La cabeza de impresión se pone muy caliente durante la impresión. Por lo tanto, deje enfriarlo algún tiempo antes de tocarla.
- No permita que se realice cualquier operación o acción de una forma diferente a lo que se señala en el manual. En caso de duda, póngase en contacto con su comerciante o con su servicio post-venta.

Правила по технике безопасности. (Russian)

Прочитайте, пожалуйста, инструкцию по технике безопасности перед включением в работу принтера.

- Не выполняйте технические работы и ремонт техники самостоятельно, но сообщайте о неисправностях квалифицированным сервисным техникам.
- Данная инструкция должна быть всегда доступна каждому пользователю.
- Установите принтер на ровном и стабильном месте так, чтобы он не смог упасть на пол.
- Ни в коем случае не ставьте принтер вблизи легко воспламеняющихся газов и взрывчатых веществ.
- Включайте принтер в розетку только с соответствующим напряжением.
- Если Вы хотите отключить принтер от напряжения, сначала выключите принтер сам и затем выньте штекер из розетки.
- Берегите принтер от нагревания, от попадания на него прямых солнечных лучей и пыли.
- Не допускайте попадания жидкости на принтер.
- Нельзя подвергать принтер тряске, ударам и вибрации.
- Убедитесь, что принтер и компьютер выключены, только после этого соедините принтер с компьютером.
- Печатающая головка нагревается во время работы принтера. Поэтому подождите какое-то время, прежде чем дотронуться до нее.
- Пользуйтесь принтером так, как это написано в документации. Если у Вас возникают неясности, обращайтесь с вопросами к Вашим продавцам или в сервисный центр.

Instruções Importantes sobre Segurança (Portuguese)

Leia as instruções de segurança antes de usar a impressora.

- Consulte sempre um técnico qualificado para executar uma reparação .
- Coloque a impressora sobre uma base sólida e nivelada, para que ela não sofra quedas.
- Jamais instale a impressora nas proximidades de lugares onde haja gás inflamável ou substâncias explosivas.
- Assegure-se de conectar a impressora à tomada elétrica com a voltagem apro-priada.
- Quando desligar a impressora da rede, desligue sempre a impressora e retire o cabo da tomada.
- Não exponha a impressora a temperaturas altas ou luz solar direta.
- Não aproxime substâncias líquidas da impressora.
- Proteja a impressora de choques, impactos e vibrações.
- Desligue a impressora e o computador antes de conectar o cabo da rede.
- A cabeça da impressora pode ficar muito quente . Portanto, espere algum tempo antes de tocá-la.
- Não faça nenhuma operação ou ação além das recomendadas neste manual. Em caso de dúvida, contate seu revendedor ou companhia de serviço.

Önemli Güvenlik Talimatları (Turkish)

Lütfen, yazıcıyı işletime geçirmeden önce bu güvenlik talimatlarını bütünüyle dikkatle okuyun.

- Bakım ve tamir çalışmalarını kesinlikle ve hiçbir surette kendi başınıza yapmayın; her zaman kalifiye bir uzman servis-teknisyenine haber verin.
- Yazıcıyı, üzerinden yere düşmesi mümkün olmayacak sabit ve düz bir zemine yerleştirin.
- Yazıcıyı kesinlikle ve hiçbir surette kolayca yanabilecek gaz veya patlayıcı maddeler içeren nesnelerin yakınına koymayın.
- Yazıcı akım kablosunu sadece doğru gerilime sahip bir prize takın.
- Yazıcıyı şebeke ağından ayırmak istediğinizde, yazıcıyı kapatın ve ağ-fişini her zaman prizden çıkartın.
- Yazıcıyı ne yüksek ısılı ne de doğrudan güneş ışığına ve toza mâruz kalan mekânlarda bulundurun.
- Yazıcı hiçbir sıvı maddeyle temasta olmamalıdır.
- Yazıcı hiçbir sarsıntıya, darbeye veya titreşime mâruz kalmamalıdır.
- Veri kablosu bağlanmadan önce hem yazıcının hem de bilgisayarın kapalı olduklarından emin olmalısınız.
- Yazıcının başı basma esnasında yüksek ısıya ulaşıyor. Bu yüzden lütfen dokunmadan önce kısa süre soğumasını bekleyin.
- Yazıcının işletimi ve kullanımında bu dokümantasyondaki talimatların hiç dışına çıkmayın. Sorunlu görünen hususlarda lütfen imâlatçınıza veya müşteri hizmetleri servisinize başvurun.

TRADEMARK ACKNOWLEDGEMENTS

"IBM" is a trademark of International Business Machines Corporation.
"EPSON" is a trademark of Epson America Incorporated.

"DEC" is a trademark of Digital Equipment Corporation.

"Centronics" is a trademark of Centronics Data Computer Corporation.
"DOS" is a trademark of Microsoft Corporation.

"SAP" is a trademark of SAP AG.

"Windows", "Windows 7","Windows 8", "Windows 95", "Windows 98", "Windows NT", "Windows 2000", "Windows 2003/2008/2012/2012R2 Server", "Windows XP" and "Windows Vista" are trademarks of Microsoft Corporation.

All other product names and company names appearing in this manual are the registered trademarks or trademarks of their respective holders.

Approvals

This device fulfils the European standards requirements by complying with the Directive relating to electromagnetic compatibility and relating to low-voltage electrical equipment. Furthermore, it fulfils the requirements for RoHS and RED if applicable.

Conformity with the above-mentioned Directives is indicated by the CE symbol attached to the device.
Note: Conformity may be affected by:
- using interface cables not complying with the specifications
- non-observance of important instructions in the operator´s manual
- installing components not approved for this device by the manufacturer
- unauthorized manipulation

Dieses Gerät erfüllt die Anforderungen der Europäischen Normen durch Einhaltung der Richtlinien bezüglich der Elektromagnetischen Verträglichkeit sowie bezüglich Elektrischer Betriebsmittel mit Niederspannung. Des Weiteren werden die Anforderungen bezüglich RoHS und falls anwendbar RED erfüllt.

Die Konformität zu den oben angeführten Richtlinien ist durch das am Gerät angebrachte CE-Zeichen gekennzeichnet.
Hinweis: Die Konformität kann beeinflusst werden durch:
- Benutzung von nicht spezifizierten Schnittstellen
- Nichtbeachtung wichtiger Hinweise der Bedienungsanleitung
- Ersetzen von Bauteilen, die nicht vom Hersteller für dieses Gerät freigegeben wurden
- Eingriffe durch Unbefugte

This device complies with the requirements of the United Kingdom (UK) legislation of Electrical Safety Regulations, Electromagnetic Compatibility Regulations, if applicable the Radio Regulations and the Restriction of the Hazardous Substances in Electrical and Electronic Equipment Regulations.

About This Manual

This manual provides information to operators of DC-7600 to describe basic operation to enable safe and correct use of the printer.

Symbol Description

The symbols in this manual are identified by their level of importance, as defined below. Read the following carefully before handling the product.

CAUTION: Provides information that must be observed to prevent damage to the equipment or loss of data.

NOTE: Advises you of information that is essential to complete a task.

Related Software and Documents

Related Software and Documents

Software/document name	Description
DC-7600 User Manual	This manual.
DC-7600 Maintenance Manual	This manual provides qualified developer/ engineers / technicians with additional technical information.

TABLE OF CONTENTS

CHAPTER 1. INTRODUCTION..... 1
1.1 Unpacking..... 1
1.2 Operating the Printer Safely..... 4
1.3 Printer Components.....7
1.3.1 The front side of the printer.....7
1.3.2 The profile of printer..... 9
1.3.3 The rear side of the printer..... 10
1.3.4 Control Panel..... 11
1.4 Attaching Power..... 12
1.5 Connecting to Computer..... 13
1.6 Installing Windows Driver.....14
1.6.1 Installing Windows Driver via USB..... 14
1.6.2 Installing Windows Driver via Ethernet.....17
CHAPTER 2. INSTALLATION..... 23
2.1 Installing Cards.....23
2.1.1 Card Specifications..... 23
2.1.2 Setting the Card Thickness..... 24
2.1.3 Adjust the card inlet according to the thickness of the cards.....26
2.1.4 Face Up/Down Stacking for Output Cards..... 27
2.1.5 Optimizing Print Quality..... 27
2.1.6 Managing Rejected Cards.....28
2.2 Replacing the Ribbon.....29
2.3 Replacing the Retransfer Film..... 32
2.4 Replacing the Cleaning Roller.....36
2.5 Installing the Output Tray.....39
2.6 Installing the Reject Bin.....39
2.7 Card Printing.....40
2.8 Firmware update..... 55
CHAPTER 3. NORMAL MODE AND USER MODE.....57
3.1 Normal Mode.....57
3.2 User Mode..... 58
3.3 The major menus.....61
3.3.1 Sub-menus for Printer Info.....61
3.3.2 Sub-menus for Head Info.....61
3.3.3 Sub-menus for Version Info.....61
3.3.4 Sub-menus for Printer Setup.....62

3.3.5 Sub-menus for card setup..... 62
3.3.6 Sub-menus for Ribbon/Film Setup..... 65
3.3.7 Sub-menus for Image Setup..... 66
3.3.8 Sub-menus for Interface Setup..... 66
3.3.9 Sub-menus for Option..... 66
3.3.10 Sub-menus for Reset User Default..... 66
CHATPER 4. CLEANING..... 67
4.1 Cleaning with a Cleaning Card..... 67
4.2 Cleaning the Cleaning Roller..... 68
4.3 Cleaning the Feeding Roller..... 68
4.4 Cleaning the Transport Roller..... 69
4.5 Filter Cleaning..... 70
CHATPER 5. TROUBLESHOOTING..... 71
5.1 Warning Messages and Troubleshooting..... 71
5.2 Valuable Help from You for Troubleshooting..... 73
5.3 Troubleshooting..... 74
5.3.1 Faults Related to Printing..... 74
5.3.2 Clear Jammed Card..... 76
5.3.3 Change the Print Head..... 78
5.4 Technical support..... 79
5.4.1 DASCOM partner network..... 79
5.4.2 More information..... 79
CHAPTER 6. SPECIFICATION..... 80
Appendix I: OPTIONS..... 81
Appendix II: FCC STATEMENT..... 85
Appendix III: DASCOM REPRESENTATIVES..... 86

CHAPTER 1. INTRODUCTION

Thank you for choosing Dascom DC-7600 card printer. You can print high-quality cards of different colors and styles with this printer. The printer should use the consumables and accessories provided by Dascom. For more details, please visit our website www.dascom.com.

1.1 Unpacking

Open the package, take out the printer and remove the protect material. Check if the parts and accessories in the box are complete as the following picture. If you found any damage, please contact the carrier and notify your authorized Dascom reseller to realize the steps to be taken.

When repairing the printer, you must provide the complete original package (outer crate, wedge and package). If send back the printer without original package, or the accessories are damaged in transit, the warranty of accessories will be invalid. The new packing charge for the printer will be charged by yourself.

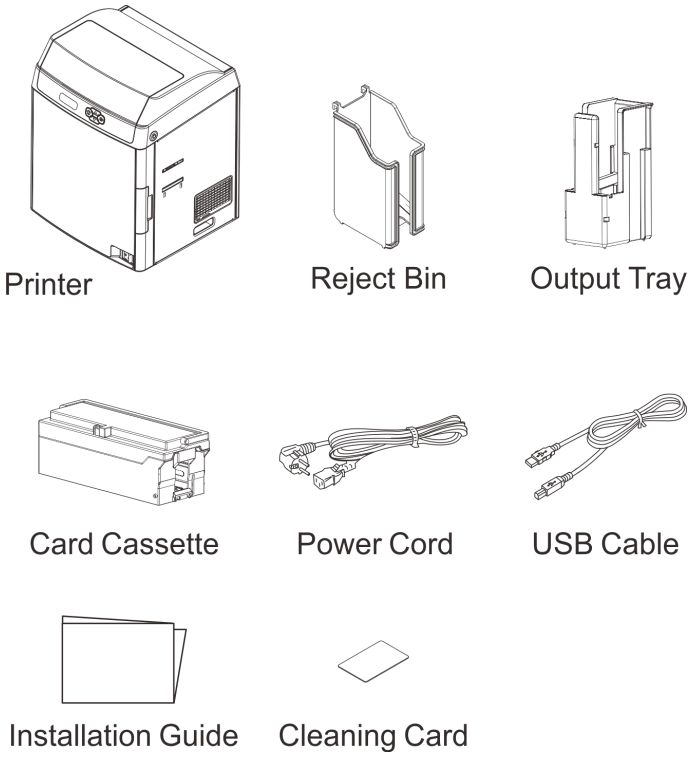

The package contents vary with different customized order requirements.

Package Contents:

Standard	Printer	1 unit	
	Card cassette	1 unit	
	Reject bin	1 piece	
	Output tray	1 piece	
	Power cord	1 piece	
	USB cable	1 piece	
	Cleaning Card	1 piece	
	Graphic Installation Guide	1 piece	

■ Remove the packaging

Remove protective material as shown below before the printer power on.

① Pinch the box locker, loosen and remove it (2 in front, 2 in the back, 4 in total)

② Hold the handles on both sides of the box and then pull up the box.

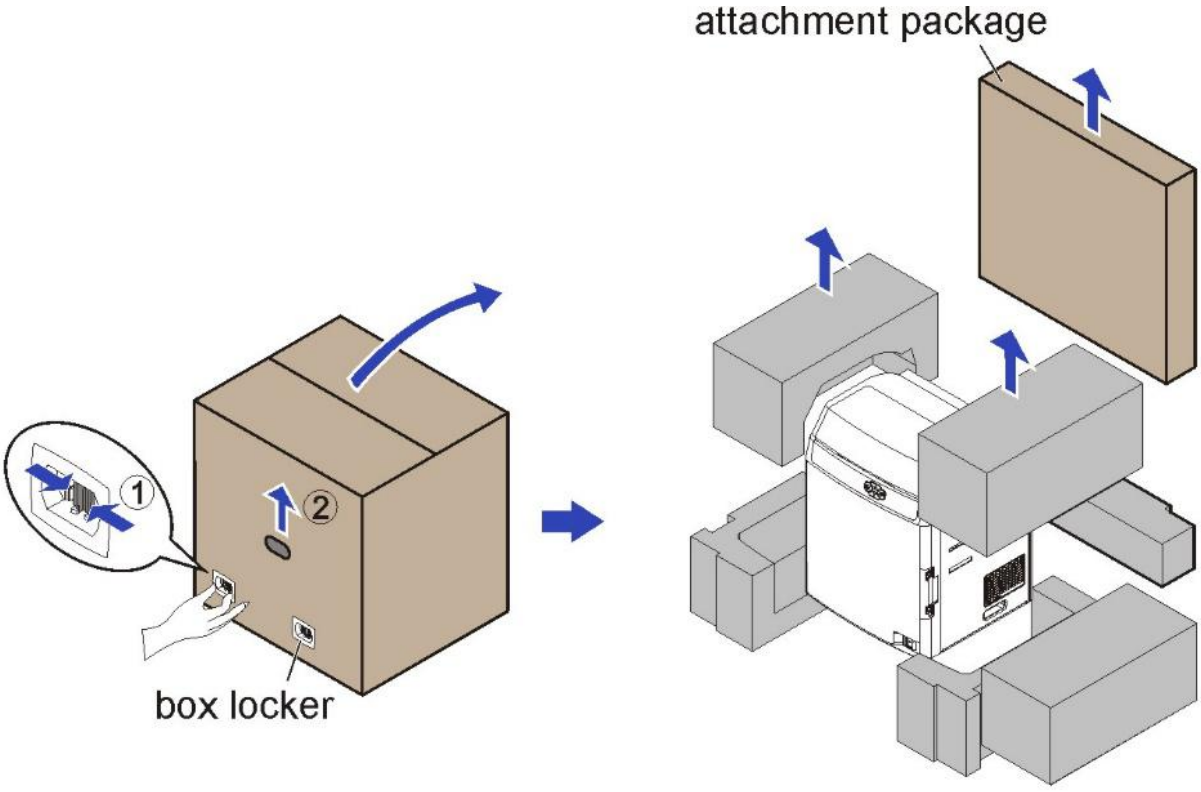

③ Remove the cushion between print roller and print head.

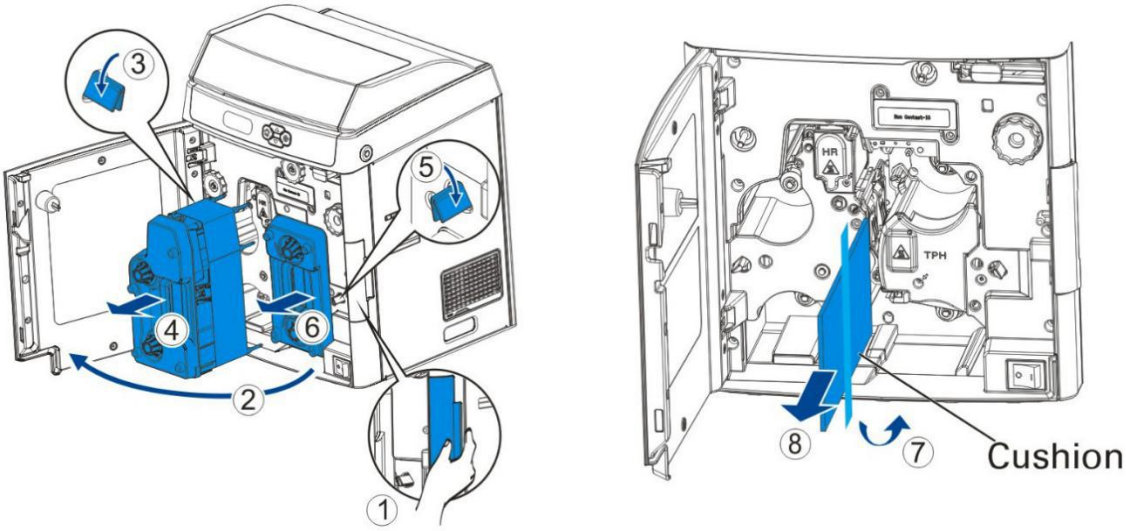

1.2 Operating the Printer Safely

The following precautions must be observed to assure safe operation of your printer. Do not do anything that is not described in this manual. Doing so could cause an unexpected failure. The manufacturer is not responsible for any problems caused by incorrect operation of the printer.

Installation location	Do not install the printer in a damp or dusty location.
	Do not install the printer near flammable or explosive materials or a heater, stove or any other device that produces heat. Do not place the printer near volatile combustible materials such as combustible materials.
	Place the printer away from walls, as shown in the diagram below, to maintain air flow. Also, maintain at least 30 cm (12 inches) of open space above the printer. Blocking vents may cause the printer to overheat and fail prematurely. 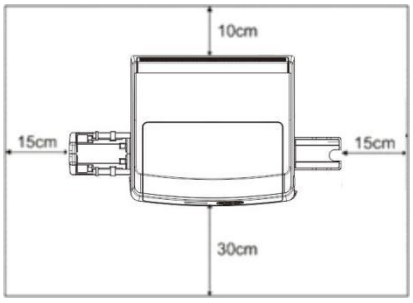 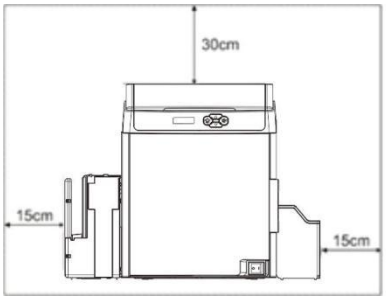
	Do not install printer on an unstable table, on a slant, or any place where there is excessive vibration.
	Do not install the printer in a location susceptible to rapid fluctuations in temperature.
	Do not install the printer in a location exposed to direct sunlight.

Power supply	Use a dedicated power cable and do not use an extension cord with multiple outlets.
	Be sure to remove any dust from the plug and electrical outlet. Humidity produces a micro-current on the surface causing overheating.
	Do not damage or modify the Power Cable. Also, do not place heavy objects, pull, or bend power cord excessively.
	Do not plug in or unplug the Power Cable if your hands are wet.
	Ensure a ground wire is connected. When connecting the ground wire, note the following cautions. **Recommended connections for ground wires** Electrical outlet ground terminal Ground terminals installed as type A, B, or C A copper rod 65 cm (25.6 inches) or longer buried in the ground. **Not permitted for ground wires** Gas piping (risk of fire or explosion) Water pipes or taps (water pipes that include plastic piping cannot act as a ground However, if a water pipe is configured to act as a ground, then connection of a ground wire is permitted.) Telephone line ground wires or lightning conductors (danger of high current flow in the event of a lightning strike.)
	Be sure to turn off power and unplug the plug from electrical outlet before moving the printer.
	Pull on the plug or cable when unplugging it from an electrical outlet.
	Do not use an under-rated extension cord.
Handling	Do not use flammable sprays near the printer.
	Do not touch anything inside the printer unless specified in this manual.
	Do not place heavy items on the printer and do not lean on the printer.
	While the printer is operating, do not turn off the power, unplug the power cable, or look inside (open) the printer.

WARNING

The lower part of the Top Access Cover, the printer internal heat roller section, and the thermal head section become very hot. Ensure you do not touch these three locations.

- The cooling fan is always running for cooling inside the printer. This is not a malfunction.
- Contact your reseller if there is a current leak.
- The printer may cause static, flickering or interrupt reception of televisions or radios if they are too close to the printer.
- The lower part of cover top, internal heating platen and printer head may produce high temperature, please don't touch these three parts.

Under the following conditions images on cards may deteriorate or cards may warp after printing:

- The surface of the card is in contact for an extended period with a vinyl card holder or synthetic leather or other material that contains a plasticizer.
- The surface of the card is exposed to direct sunlight for an extended period.
- The card is repeatedly rubbed against a hard object such as a key.
- The faces of two cards are in contact for an extended period.
- The card is kept for an extended period in a very hot location such as a car parked in the sun.
- The card is bent, or used with excessive force.

If a card with a magnetic strip is placed near a magnetic source, the data on the strip could become corrupted.

Additionally, if an IC chip card is bent, or used with excessive force, the IC chip may be damaged.

1.3 Printer Components

1.3.1 The front side of the printer

Printer components and their functions are shown as below：

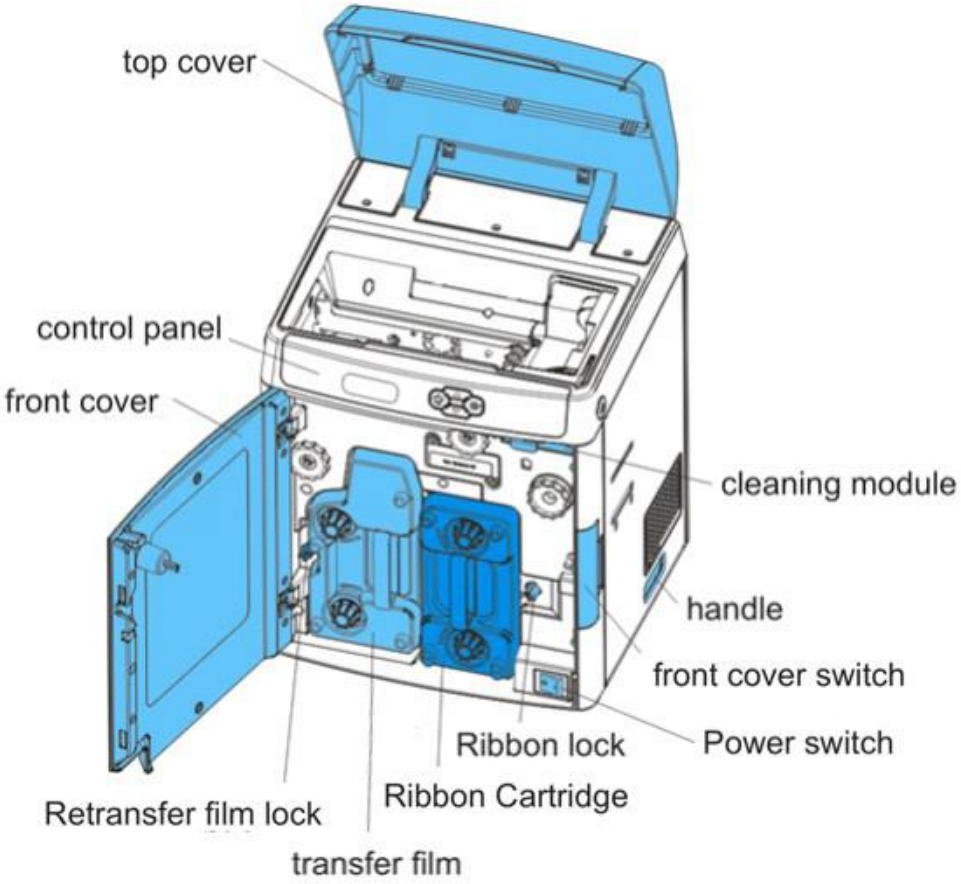

Component Name	Function
Top cover	Open when loading cards or cleaning the feeding roller.
Control panel	Includes the keys, the LCD Panel, and LED indicator for operating the printer.
Front cover	Open when changing print ribbons and retransfer film, and when cleaning the Cleaning Roller.
Retransfer film lock	When loading retransfer film, move the lock switch away from retransfer film cartridge to release.
Retransfer film cartridge	Retransfer film. This is where you install retransfer (INTM) film
Ribbon cartridge	Ribbon cartridge. This is where you install color print ribbon.
Rib cartridge lock	When loading ribbon, move the lock switch away from print ribbon cartridge to release.
Power switch	Turns power on and off.
Front cover switch	Front Cover opening switch. Press to open the Front Cover.
Handle	Move the printer.
Cleaning module	Remove when replacing the Cleaning Tape (or “roller”?).

1.3.2 The profile of printer

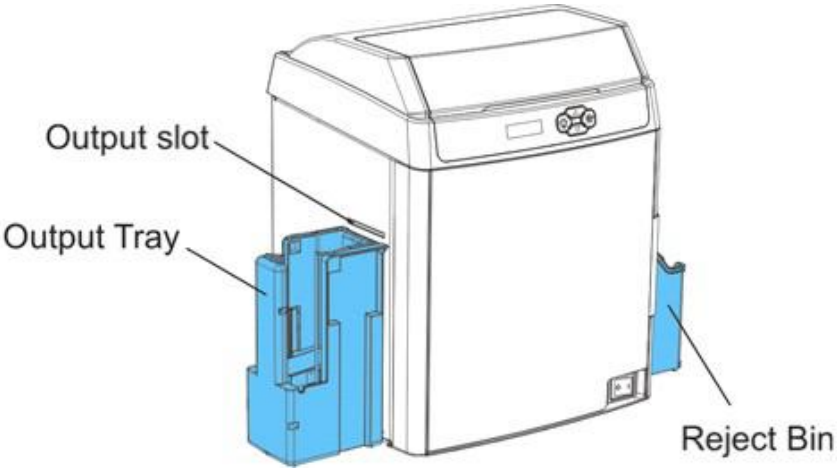

Component Name	Function
Output slot	Ejects correctly printed cards.
Output tray	Catches / collects correctly printed cards
Reject bin	Cards with errors are placed here

1.3.3 The rear side of the printer

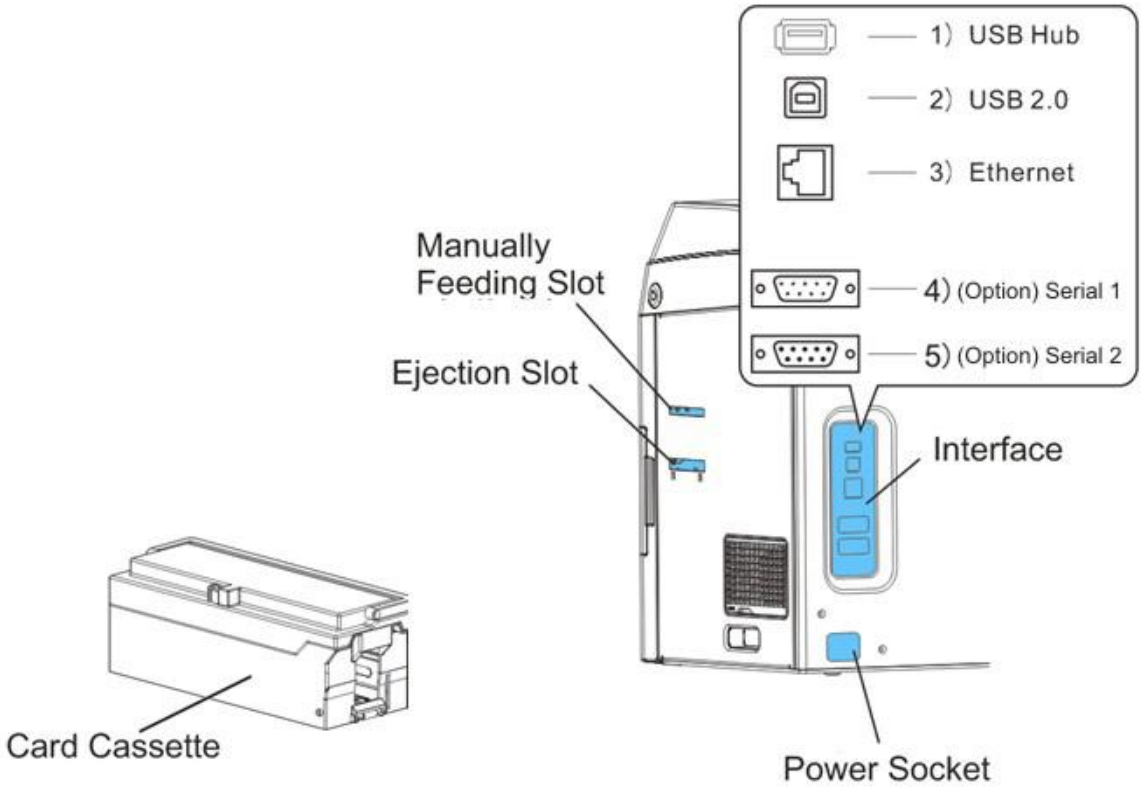

Component Name	Function
Card cassette	Up to 250 0.76mm / 30-mil cards can be loaded at a time. You can adjust the gate gap to match card thickness. Factory default is set so the gap corresponds to feeding of cards of 0.76 mm / 30-mil cards.
Manual feeding slot	Manually feed cards one at a time, or single-feed.
Ejection slot	Cards are ejected through this slot.
Interface	USB Hub, USB 2.0 and Ethernet as standard interface, Serial 1 and serial 2 as optional.
Power socket	Used to connect Power Cable.

1.3.4 Control Panel

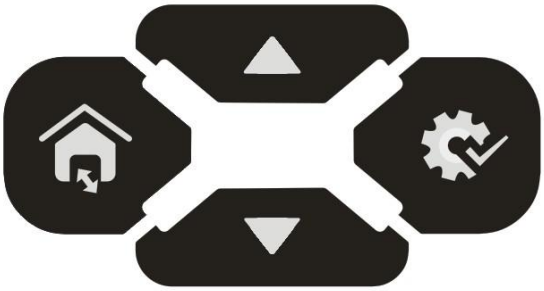

There are four buttons.

Logo	Name	Function
	【Menu/Exit】 key	Enter or exit current setup
	SET Key	Confirm current setting
▲/▼	【Up/Down】 keys	Choose between or navigate settings

Status LED and buzzer

There're two LED lights: blue means ready, red means error;

The combinations of different lights and buzzer mean different status of printer:

Printer Status	Ready LED (Blue)	Error LED (Red)	buzzer
Initiating	Flashes	Flashes	/
Heating			
Ready	On	Off	/
Menu setup	On	On	/
Printing	Flashes	Off	/
Warning	Flashes	Flashes	/
Error	Off	On	Buzz constantly

LCD

User can learn status of printer and modify the parameters of printer via the LCD.

1.4 Attaching Power

1. Make sure the printer and the computer arepowered off.
2. Connect the power cord to the printer.
3. Connect the power cord to thepower socket.
4. Ensure the power cord is securely connected. Turn on the printer power button.

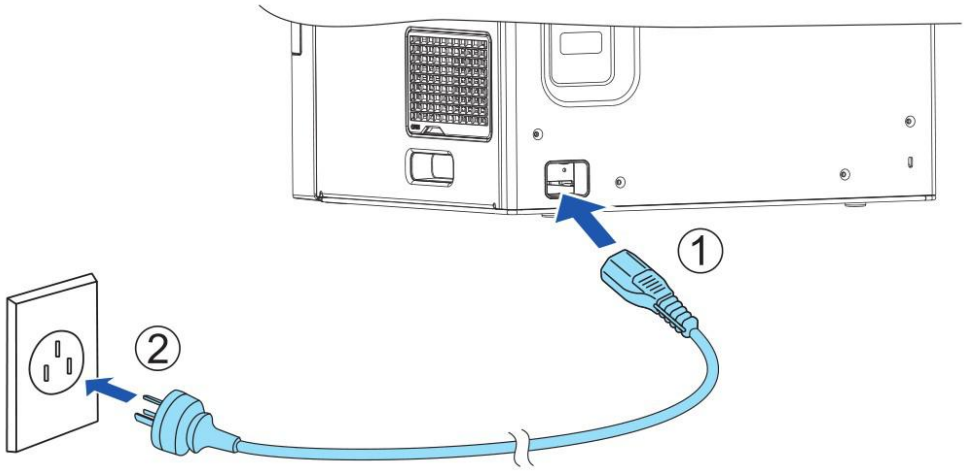

1) Press the power switch: “I”, switch on the printer;

2) Press the power switch: “O”, switch off the printer.

1.5 Connecting to Computer

The standard config ports of this printer are USB port and Ethernet port. All the ports are behind of the printer, please choose the proper port.

1. Ensure your printer is switch off.
2. Insert the interface cable into the corresponding port.
3. Connect the other end of the interface cable to the host computer.

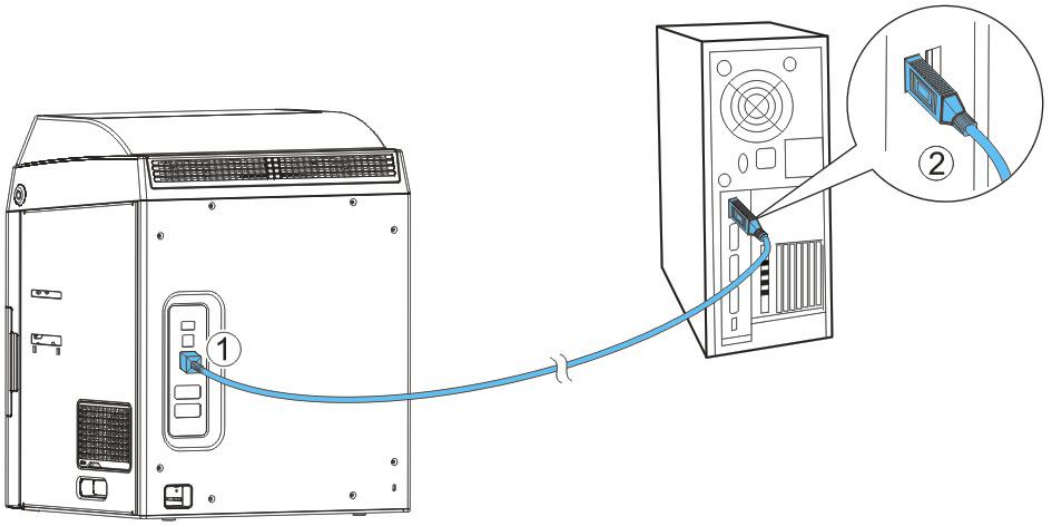

1.6 Installing Windows Driver

The driver is the connection and transformation platform between the printer and the computer operating system to achieve the interactive processing of the information.User can set up relevant settings, get print status and etc. via driver.

The latest Windows printer drivers can be downloaded from our web:
Https://www.dascom.com/downloads.html

The guide steps are operated with Win 10 system.

1.6.1 Installing Windows Driver via USB

Connect the USB cable to the computer, from the folder that you unzipped the driver files to select “DC-7600 Driver_ENG_VerX.XXX.X.XX.exe”. The program will guide you to finish the whole installation.

Please follow the installer carefully. Some Windows versions require users to have administrator privileges to install the driver.

(1) Select USB connection. Click “Next”.

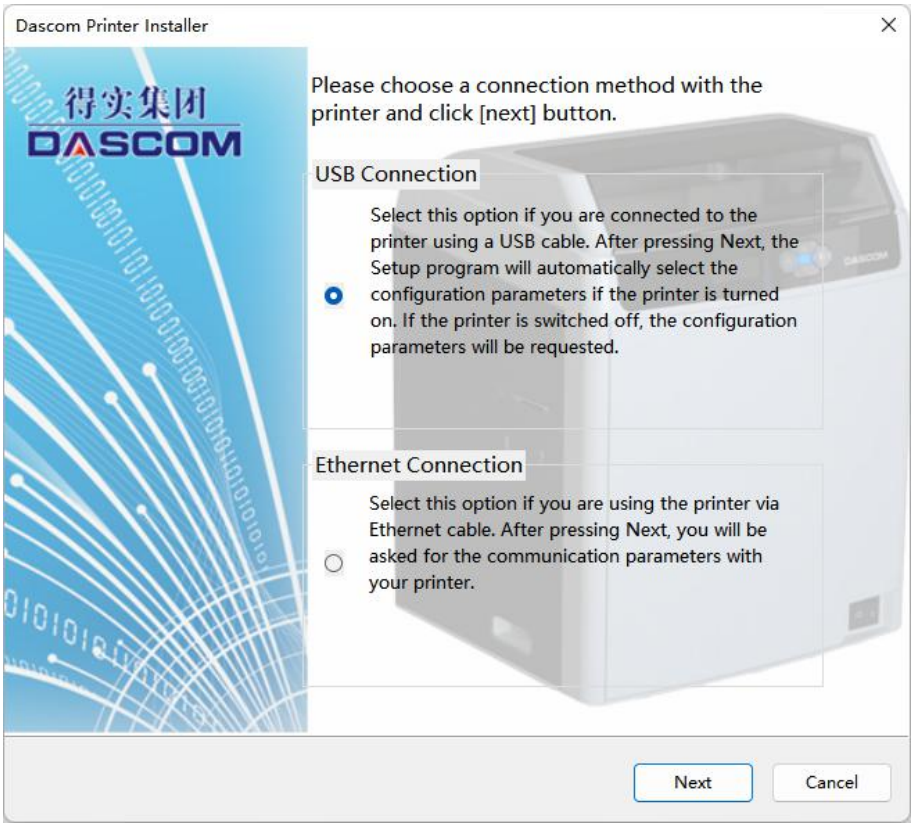

(2) Select the driver selection and port selection, click “Next”.

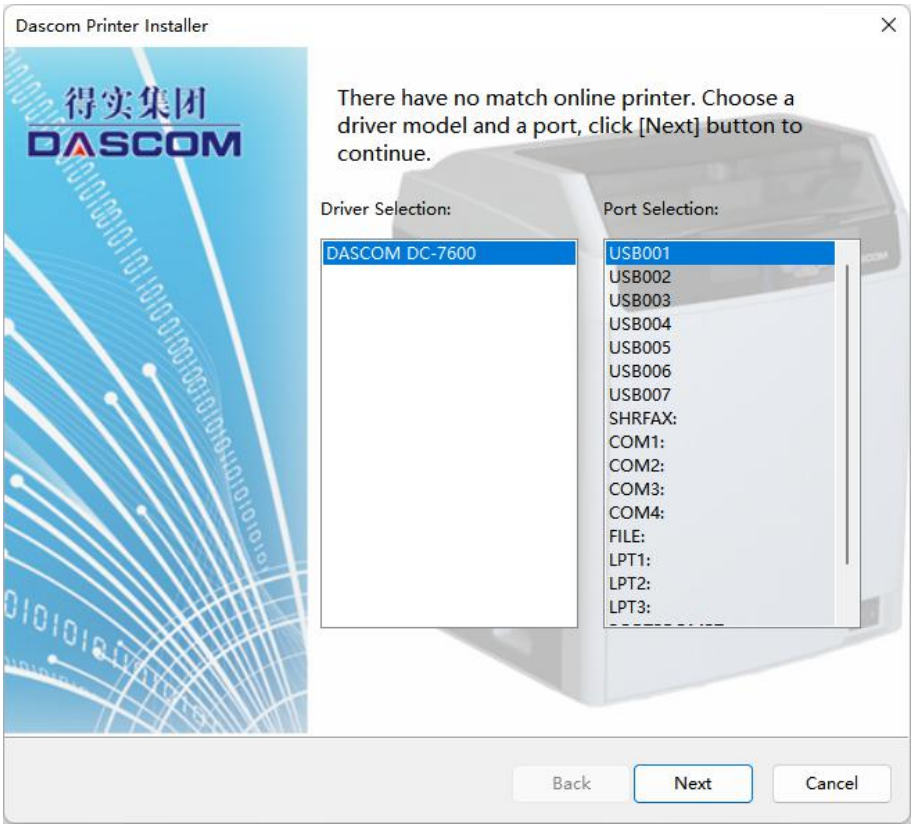

(3) Set up the printer name, click “Start”.

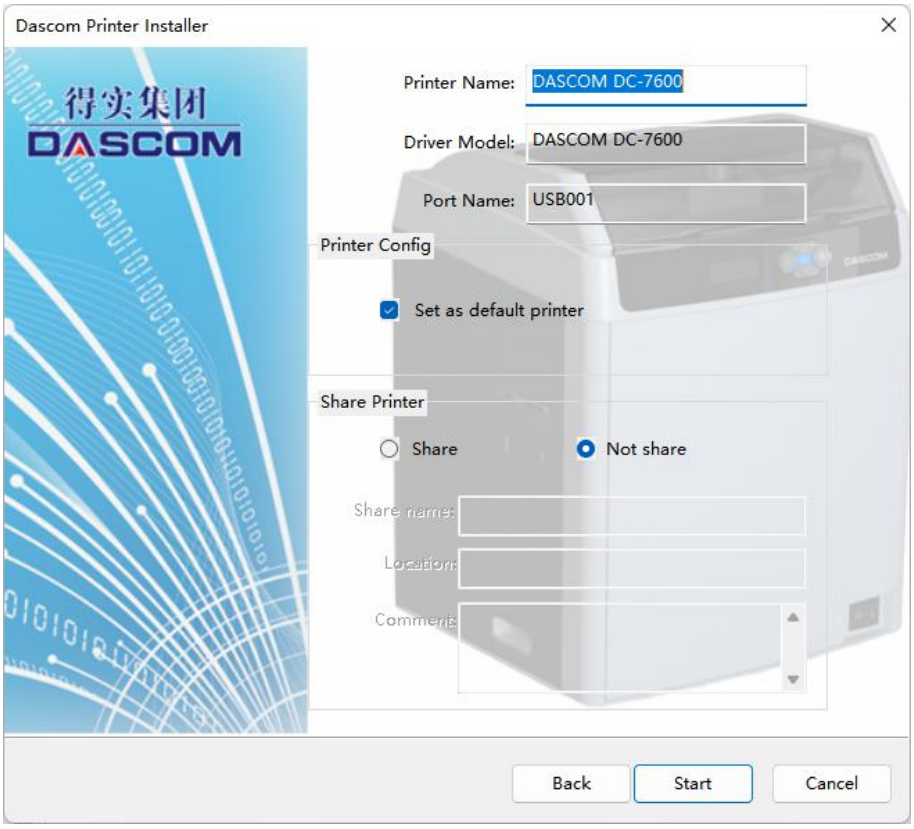

(4) Wait for the installation to finish.

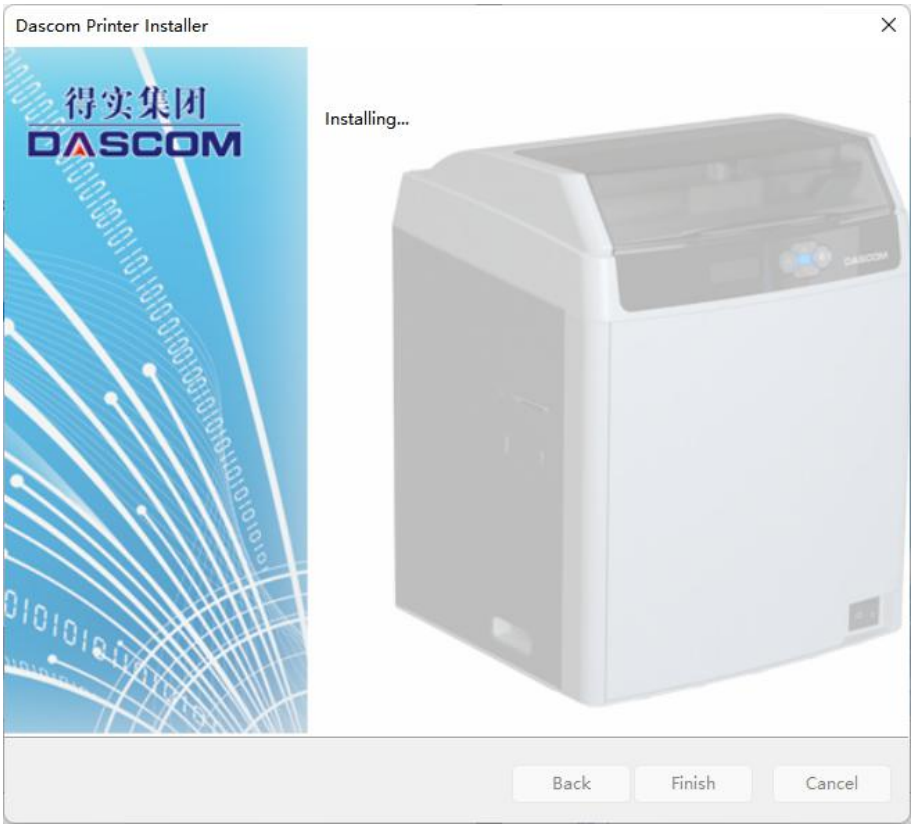

（5） Click the Finish button once the installation ends.

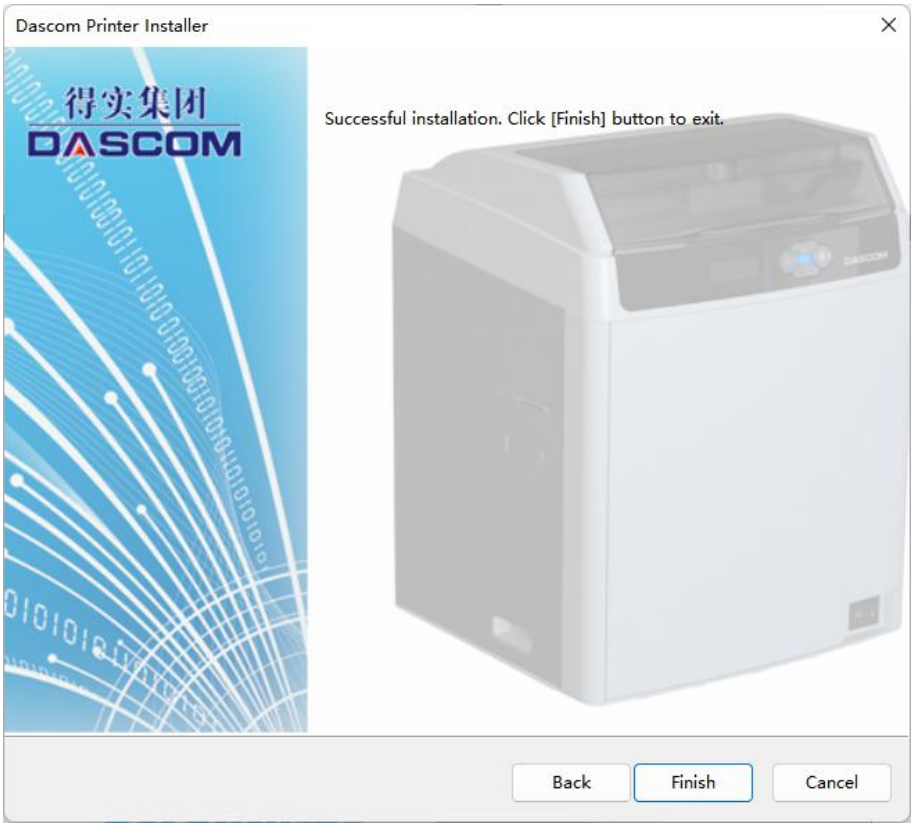

1.6.2 Installing Windows Driver via Ethernet

Connect the Ethernet cord to the computer, from the folder that you unzipped the driver files to select “DC-7600 Driver_ENG_VerX.XXX.X.XX.exe”. The program will guide you to finish the whole installation.

Ensure the printer and the computer are on the same LAN before installation. Switch on the printer. Please follow the installer carefully. Some Windows versions require users to have administrator privileges to install the driver.

(1) Choose the install port, click “Next”.

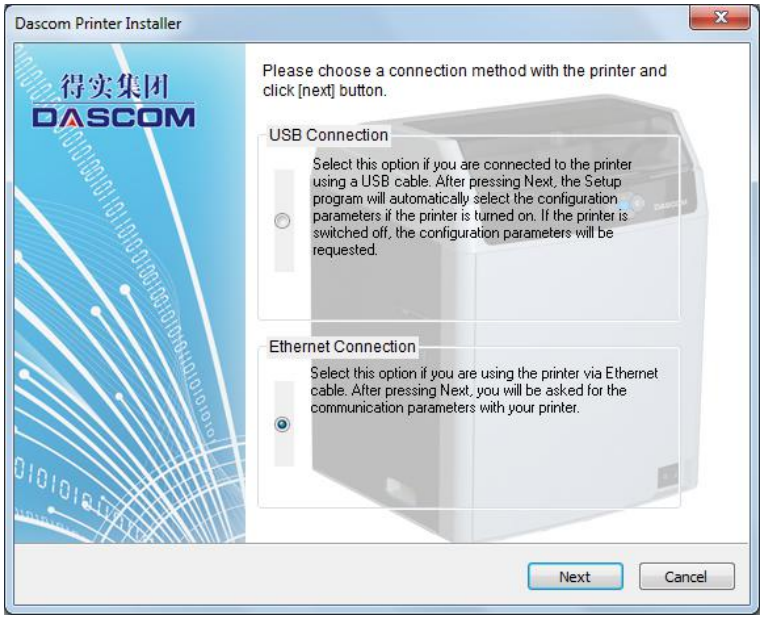

(2) Click Search to locate the printer on your network.

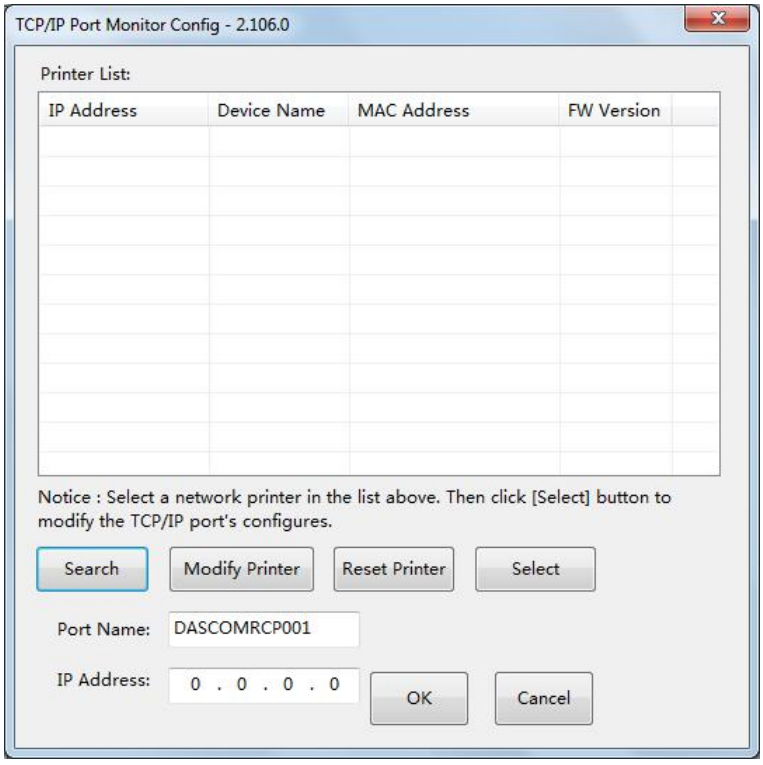

(3) Choose you printer, click “Modify printer”.

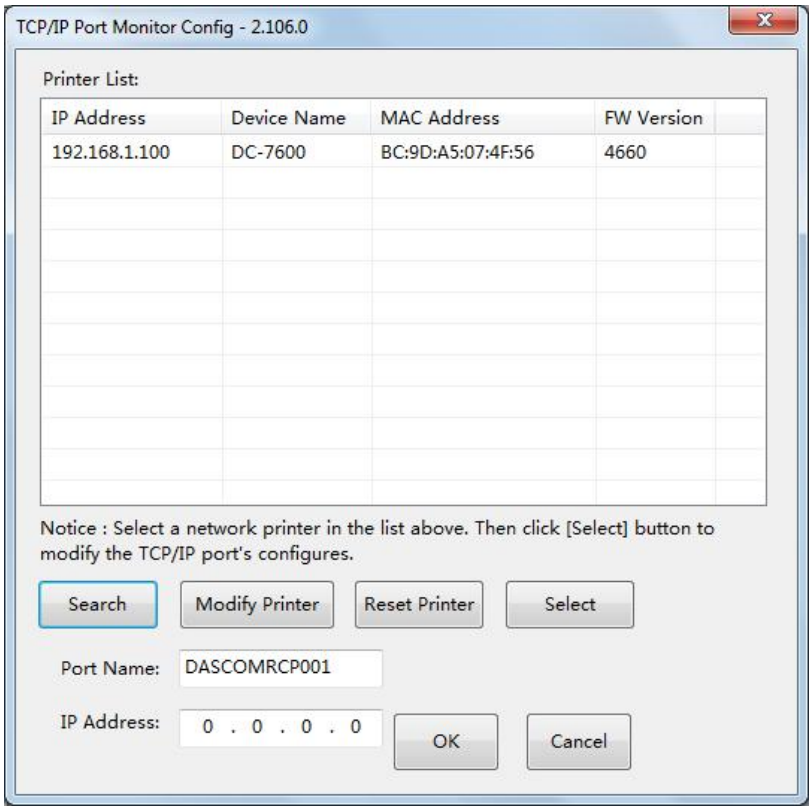

(4) You can modify the Printer name, IP address acquisition mode， IP address, Subnet mask. Click the “OK” when you finish.

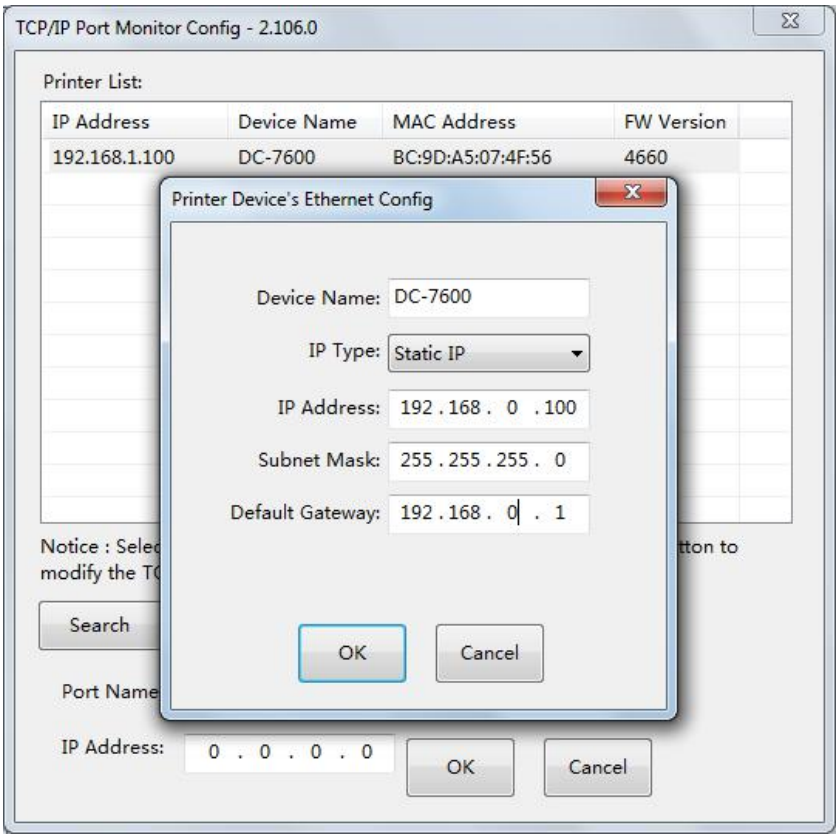

(5) Return to the Ethernet port configuration page, wait for a few seconds, you can see the updated Ethernet information.

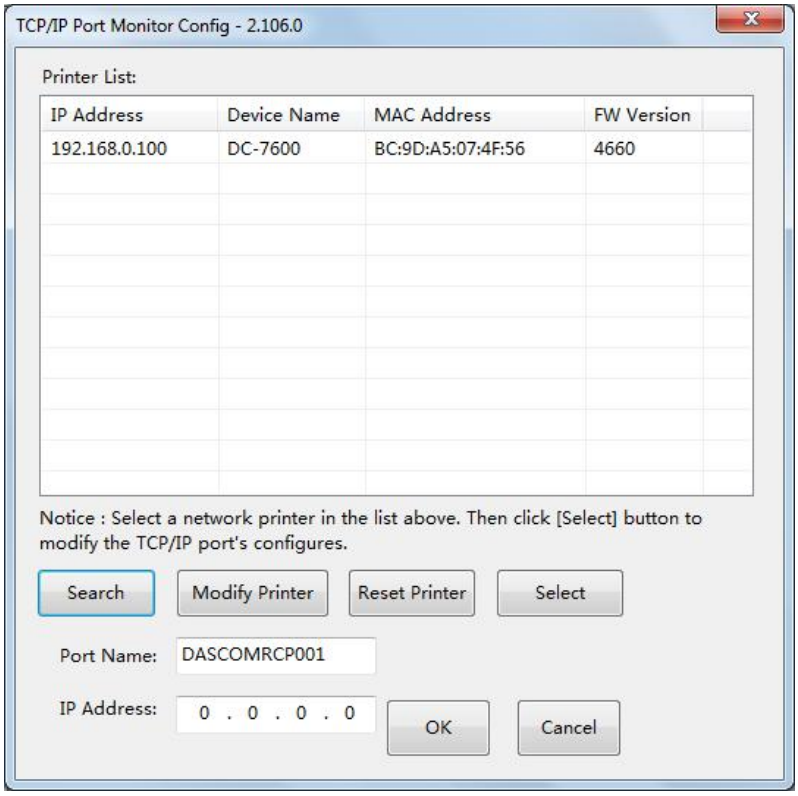

(6) Select you printer, click “Choose”, the corresponding IP address information is displayed at the bottom left. Start the installation when you click the “OK”.

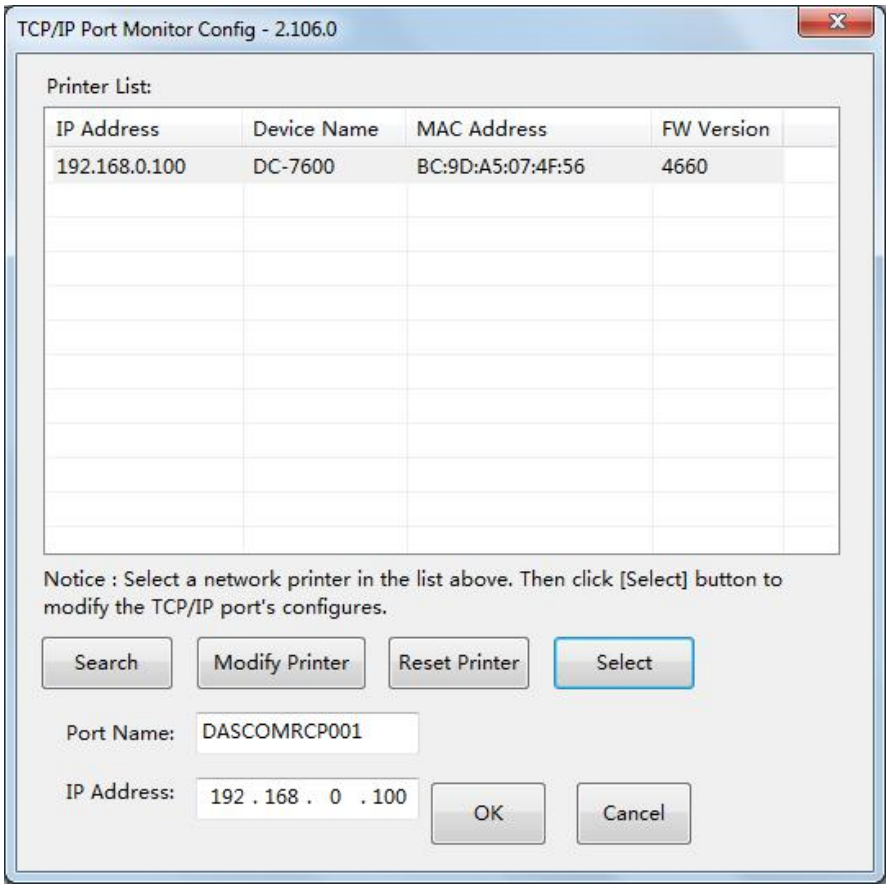

(7) Select the diver selection and port selection, click “Next”.

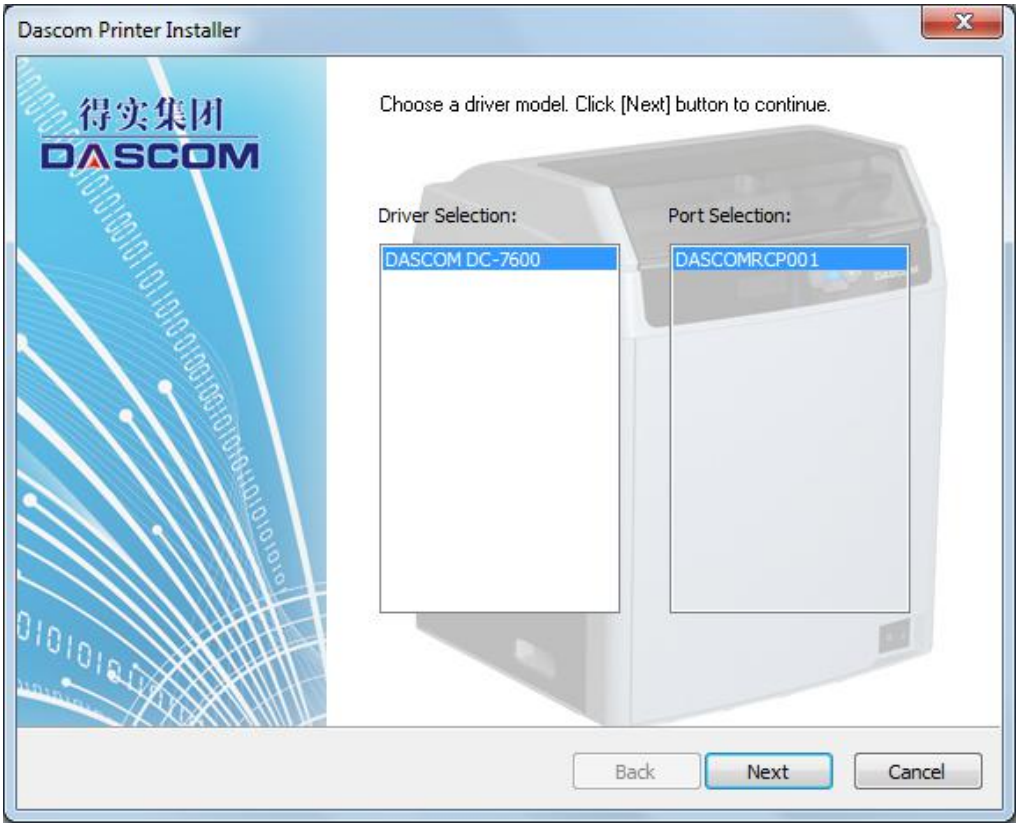

(8) Set up your printer name, click “Start”.

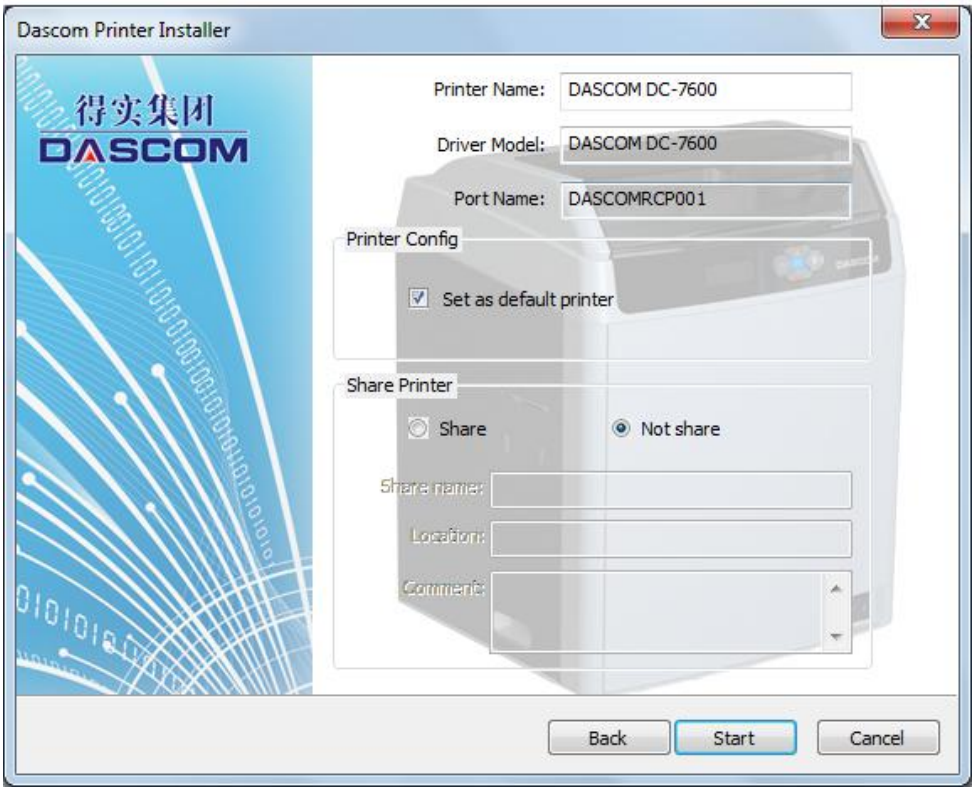

(9) Waiting for the installation.

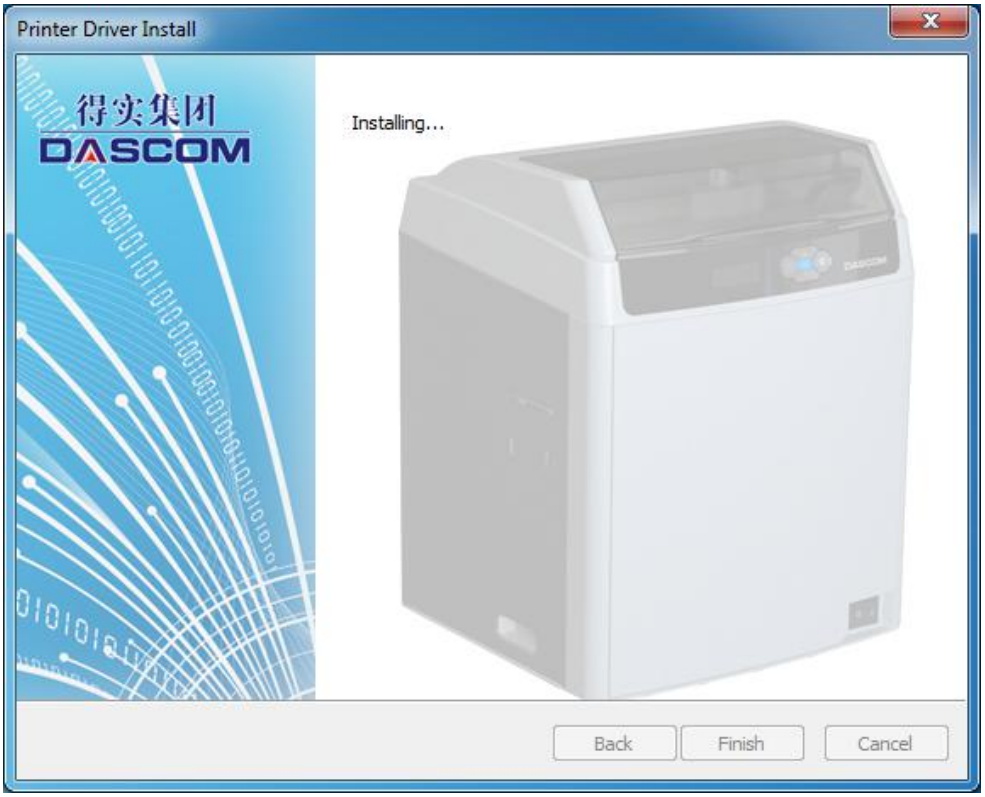

(10) Finish the installation, click the “Finish”.

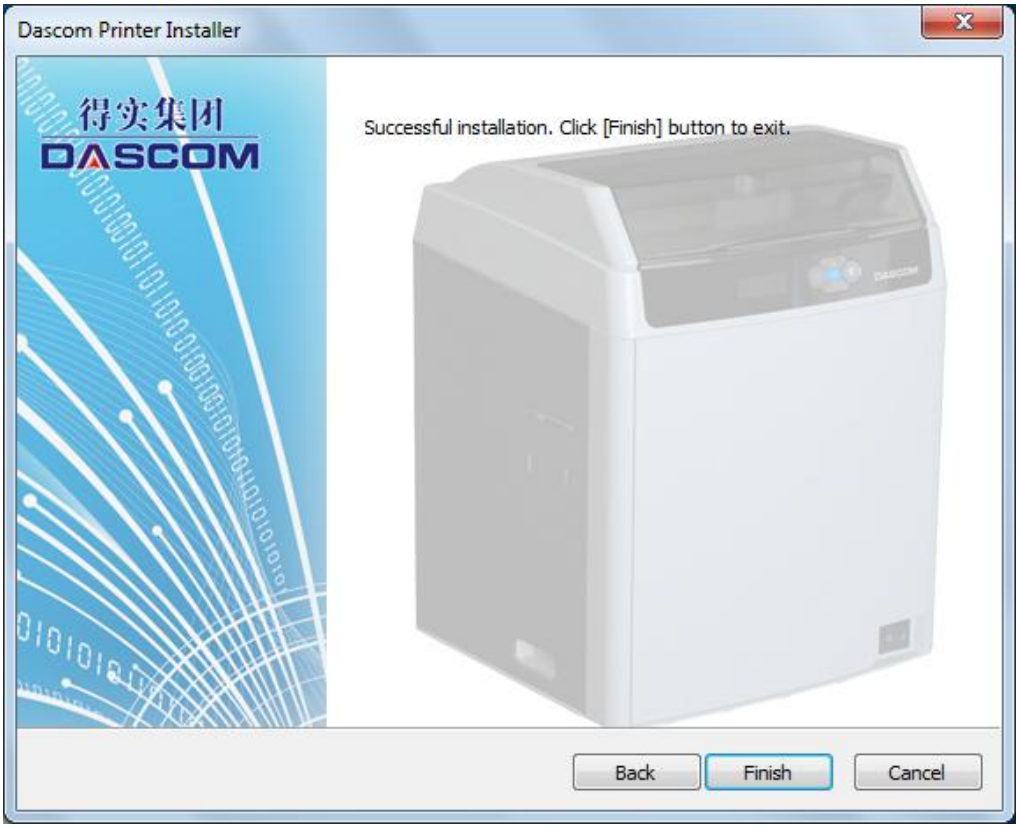

CHAPTER 2. INSTALLATION

2.1 Installing Cards

Cards can be loaded automatically from the **card cassette** or manually from the **manual feed slot**.

• The card cassette can hold a large quantity of cards making it convenient for mass or large-scale printing.

• Feeding cards one-by-one manually is well-suited for printing cards with different features such as magnetic stripe, or RFID mifare contactless cards.

2.1.1 Card Specifications

This printer supports CR-80 cards.

Dimensions： 85.6mm × 54mm

Thickness: 0.48mm ～ 1.10mm

Types: blank card, magnetic stripe card, contact smart card, contactless smart card, and pre-printed card.

- Non CR-80 cards may cause defective print results or become stuck or lodged in the printer requiring service.
- Do not use the cards listed below:

- Previously printed cards
- Damp cards
- Cards containing foreign particles, such as glass or metal
- Embossed cards
- Cards contaminated with oil, grease or dirt
- Defective cards with damages ,cracks, broken corners, or bends
- Transparent Cards
- Cards with odd shapes that are not CR80 in size

2.1.2 Setting the Card Thickness

➢ Install the card to the Card cassette.

(1) Push the slot button to the right, the slot cover will be released.

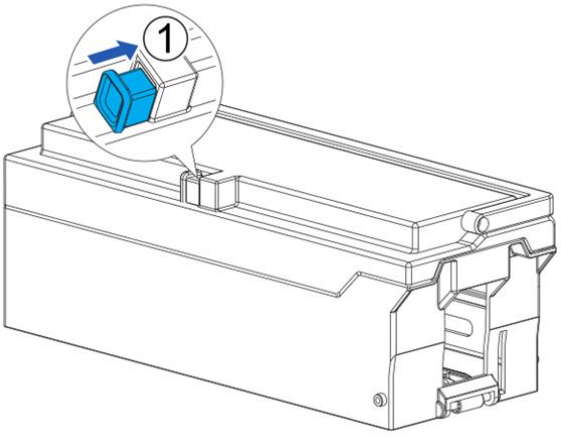

(2)

① Open the slot cover backwards;

②Move the card block lever to the left;

③Press the lever handle with your hand and move the card to the left;

④At the same time insert the card into the slot. Release the lever handle, the block return to fix the card.

⑤Move the lever to the right, close the cassette.

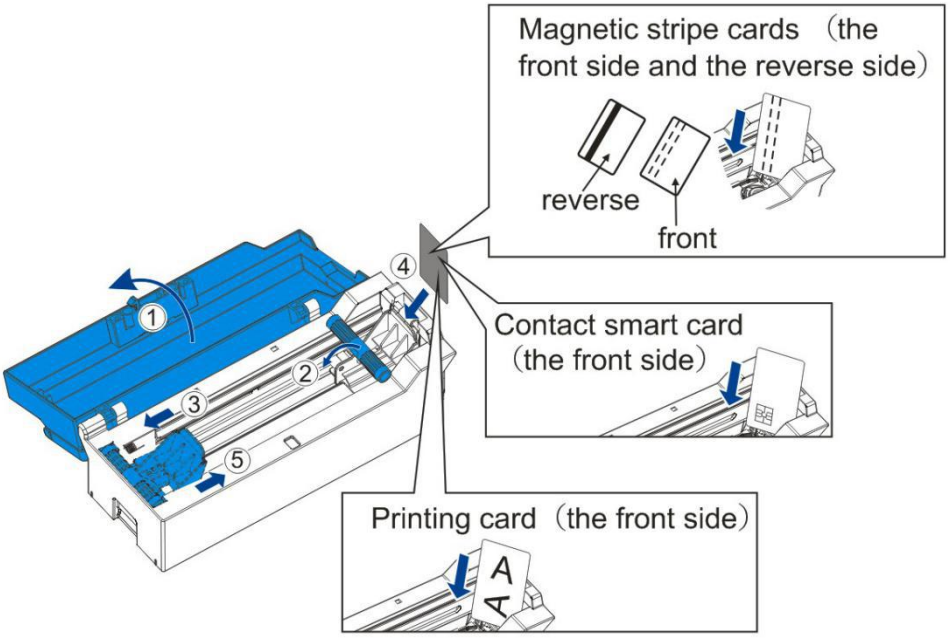

Please put the card carefully. Ensure that magnetic stripe CARDS and contact smart CARDS are properly placed in the card feeder. If the card is inserted in the wrong direction, the code selection may not work properly.

(3) **Open the top cover of the card printer**

① Firstly, press the right side of the card cassette into the printer;

② Then, press the left side of the card cassette into the printer;

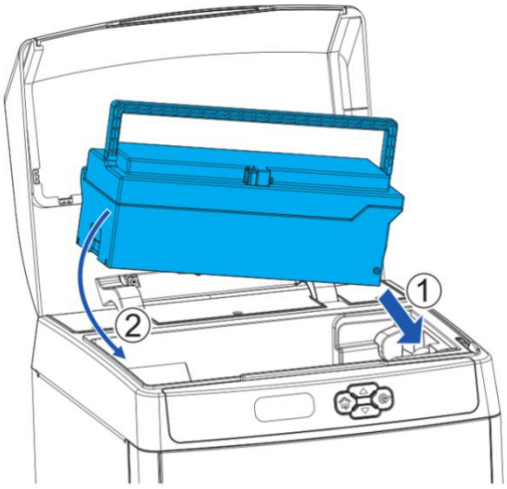

(4) Close the top cover.

When you take out the card cassette, lift the left side of the card cassette first, then lift the left side. In this way, user can easily take out the card cassette.

2.1.3 Adjust the card inlet according to the thickness of the cards

The factory default supports 0.76mm (30mil) card thickness. Confirm the correct thickness setting before installing new cards to the card cassette.

(1) Open the top cover of the printer. Remove the card cassette. Hold the **card cassette handle**. Lift up left end first①. Then pull out the wholefeeder②.

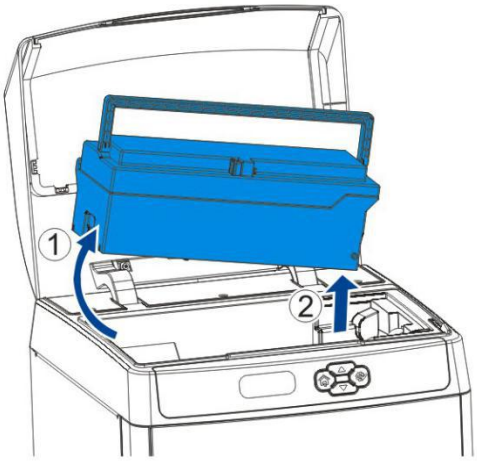

(2) Take out all stored cards, if any.

(3) Turn the knob underneath the card cassette right and left to adjust the card inlet.

- The number corresponding to the position of the knob indicates the size of the open gap.

-For thicker cards, turn the knob clockwise.

-For thinner cards, turn the knob counter-clockwise.

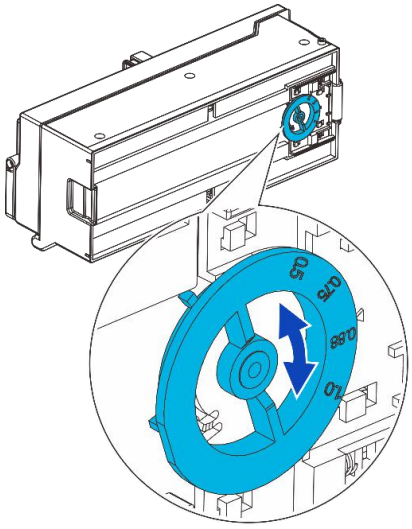

(4) Put the card cassette in place, close the top cover.

① Firstly, press the right side of the card cassette into the printer;

② Then, press the left side of the card cassette into the printer;

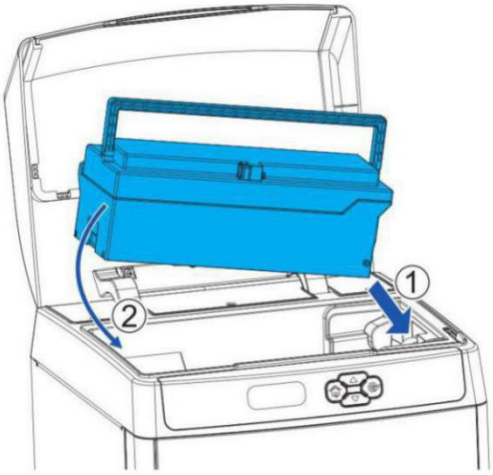

2.1.4 Face Up/Down Stacking for Output Cards

User can set up the output cards face up or down.

Face Up: Correctly printed cards are arranged with the printed surface facing up after printing.

Face Down: Correctly printed cards are arranged with the printed surface facing down after printing.

Follow the below procedures to change the stacking orientation:

① Refer Section 3.2 to change from Normal Mode to User Mode.

② Press the ▼ **Key** until [Card Setup] is displayed. Press the **SET Key**.

③ Press the ▼ **Key** until [Eject Face] is displayed. Press the **SET Key**.

④ Press the ▼/▲ **Key** to change the stacking orientation. Press the **SET Key**.

Auto is the factory default for output cards stacking.

2.1.5 Optimizing Print Quality

For optimizing print quality, you can change the retransfer settings refer to the card you want to print.

You can select proper card type by LCD panel settings or Windows driver software to optimize the print quality, which is determined by the retransfer speed/temperature on various card materials.

Follow the below procedures to change the card type:

① Refer Section 3.2 to change from Normal Mode to User Mode.

② Press the ▼ **Key** until [Card Setup] is displayed. Press the **SET Key**.

③ Press the ▼ **Key** until [Card Type] is displayed. Press the **SET Key**.

④ Press the ▼/▲ **Key** to select the proper type:

PVC

PET

PET-G

Card 1 (35, 202)

Card 2 (20, 207)

Card 3 (20, 212)

2.1.6 Managing Rejected Cards

This printer is equipped with left and right slots to separate correctly printed cards from rejected ones. By default, rejected cards are ejected from the right slot. However, the two slots are interchangeable for your preference.

Follow the below procedures to assign the location of the Reject Slot:

① Refer Section 4.2 to change from **Normal Mode** to **User Mode**.

② Press the ▼ **Key** until [Card Setup] is displayed. Press the **SET Key**.

③ Press the ▼/▲ **Key** until [**Std card exit**]/[**Error card exit**] is displayed. Press the **SET Key**.

④ Press the ▼/▲ **Key** to select the proper reject slot:

For factory defaults, the printer outputs correctly printed cards and rejected ones to the left and right slots, respectively.

2.2 Replacing the Ribbon

Change the ribbon when the LCD prompts **[RIBBON END]** message.

Approved ribbons for this printer:

Type	Description	Product Code
YMCK Color Ribbon		
YMCKH Color Ribbon		
YMCKK Color Ribbon		
YMCKI Color Ribbon		
YMCKSI Color Ribbon		

Please contact your local reseller for ribbons not listed above.

- Direct touching contaminates the **ribbon/retransfer film** and causes uneven print quality.
- Avoid touching the retransfer tape and film excessively when replacing them.
- Using non-genuine products may cause poor print quality and printer malfunction.
- Quality and reliability of the non-genuine products are not guaranteed.
- Even within the warranty period, fees may be charged on servicing the printer using non-genuine products.

You can get the unused quantity of ribbon and retransfer film.

Refer Section 3.3 to get the unused amount of your ribbon/retransfer film.

LCD Panel operation or the Windows software driver provide an estimation of the remaining ribbon/retransfer film that are sufficient for your current print job. The LCD displays the [RIBBON END] or [FILM END] warnings when they close to running out.

Consume the ribbon/retransfer film as soon as possible after purchase.

- Open the front cover:
  Hold the **handle**① and open **front cover**②.

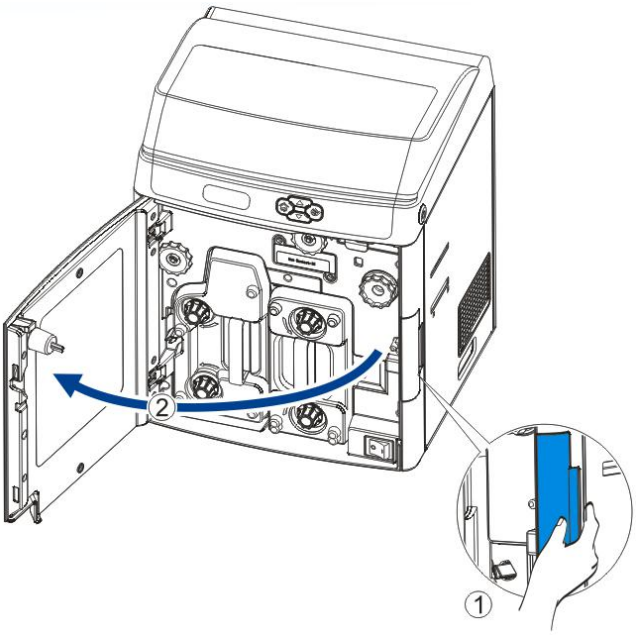

- Turn the **ribbon lock**① clockwise to unlock the **ribbon cartridge** and pull out the whole cartridge②.

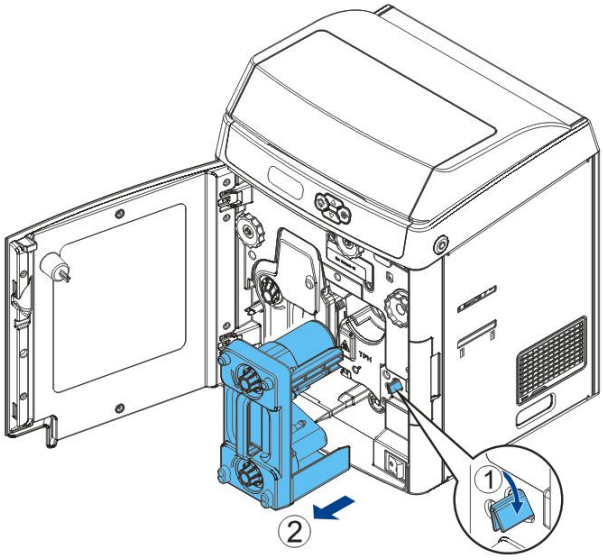

- To load a new ribbon onto cartridge, place or engage **orange spool** ① of ribbon to feeding hub of the cartridge.
- While unwinding the ribbon film, route② the film around three guiding poles.
- Finally engage the **black spool** to the winding hub③ of cartridge.

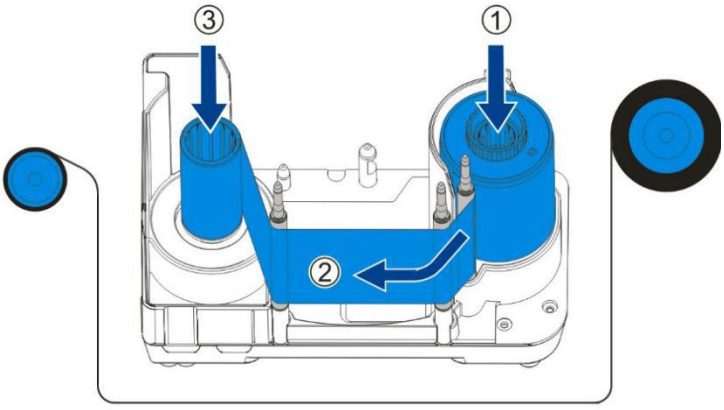

Apply some force to push in the spools to the hubs.

The ribbon should be slightly tightened and not slanted.

- As shown in the right diagram, push in the ribbon cartridge to the far end until a "click" is heard to indicate correct insertion.

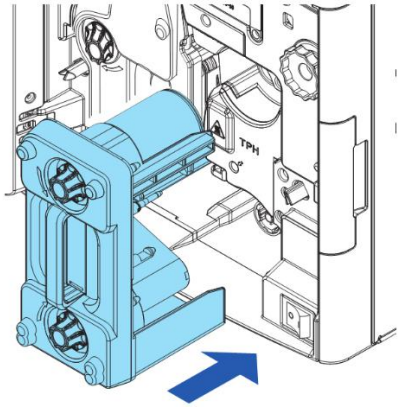

- Close the front cover to its original position.

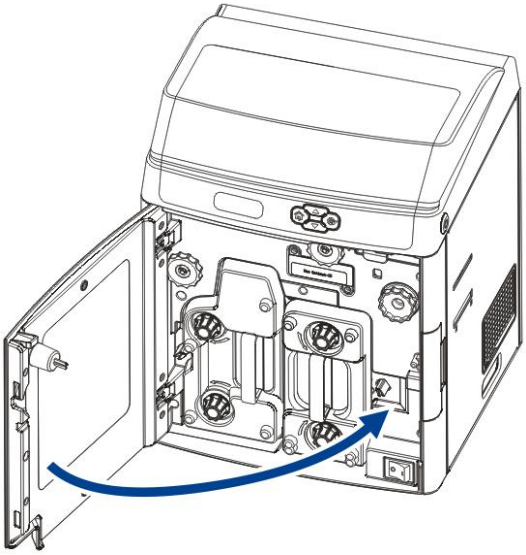

- Press the SET key when the LCD screen displays [Please press SET key].

2.3 Replacing the Retransfer Film

You should replace the retransfer film when the LCD shows [FILM END] warning. Care should be taken not to contaminate the film in the replacement process.

You can check the unused amount of your ribbon/retransfer film.

→Refer Section 3.3 to get the unused amount of your ribbon/retransfer film.

When removing the film cartridge, do not touch the inside of the printer because it is extremely hot. Read the safety instructions provided.

Approved retransfer film

Type	Description	Product Code
Transparent Retransfer Film	Transparent retransfer film	
Security Retransfer Film	Customized retransfer film (INTM) for security purposes.	

Please contact your local reseller for ribbons not listed above.

- Direct touching contaminates the **ribbon/retransfer film** and causes uneven print quality.
- Avoid dropping or stressing the **ribbon/retransfer film** when replacing them.
- Using non-genuine products may cause poor print quality and printer malfunction.
- Quality and reliability of non-genuine products are not guaranteed.
- Even within the warranty period, fees may be charged on servicing the printer using non-genuine products.

① Hold the **handle** and

② open the **front cover**

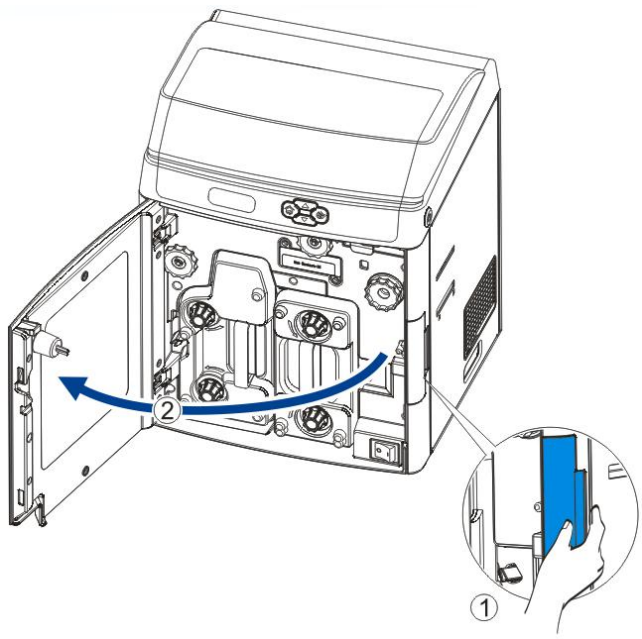

① Turn the retransfer **film lock** counter-clockwise to unlock the retransfer **film cartridge** and

② pull out the whole cartridge.

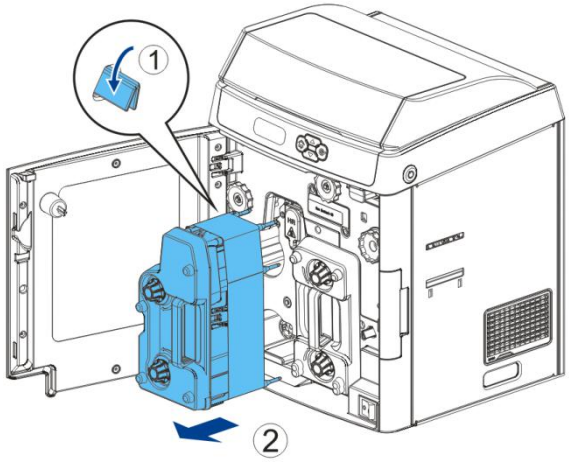

To load new retransfer film onto the cartridge, engage the **green spool**① of the retransfer film to the feeding hub of the cartridge.

While unwinding the ribbon film, route② the film around the five indicated guiding poles. Note the change of direction on the 4th pole.

Finally engage the **black spool**③ to the winding hub of the cartridge. (need to show "winding hub" in picture to right)

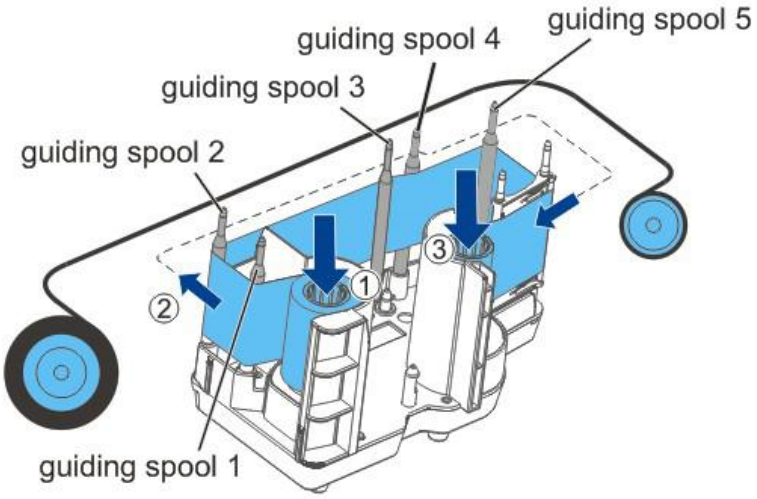

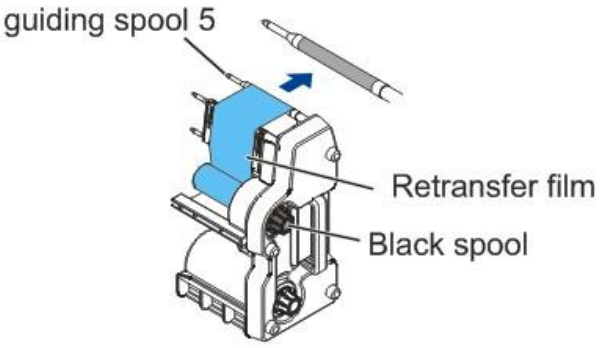

As shown in the right diagram, push in the retransfer film cartridge to the far end until a "click" is heard to indicate correct insertion.

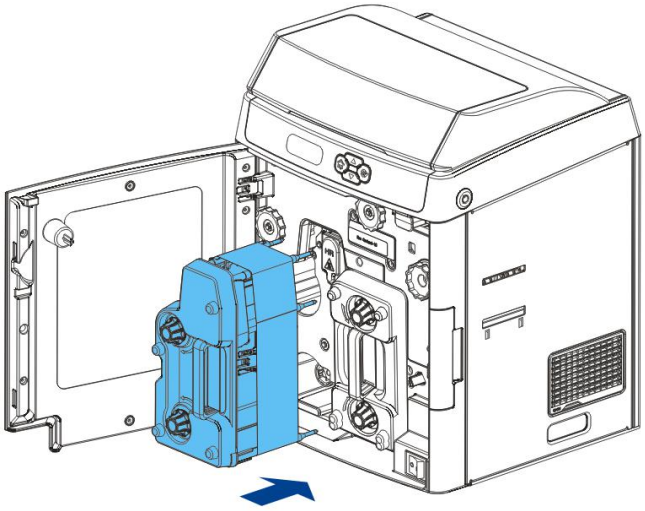

Avoid the film touching the printer compartment during insertion.

Improper retransfer film installation affects the overall print quality. After inserting the retransfer film cartridge, double-check so that there is no slanted film:

- Open the printer top cover.
- Take out the card cassette.
- Confirm the retransfer film stays within the area shown in the right diagram. (Between the two stages of guiding spool 5)If not, re-install retransfer film cartridge by following above directions.

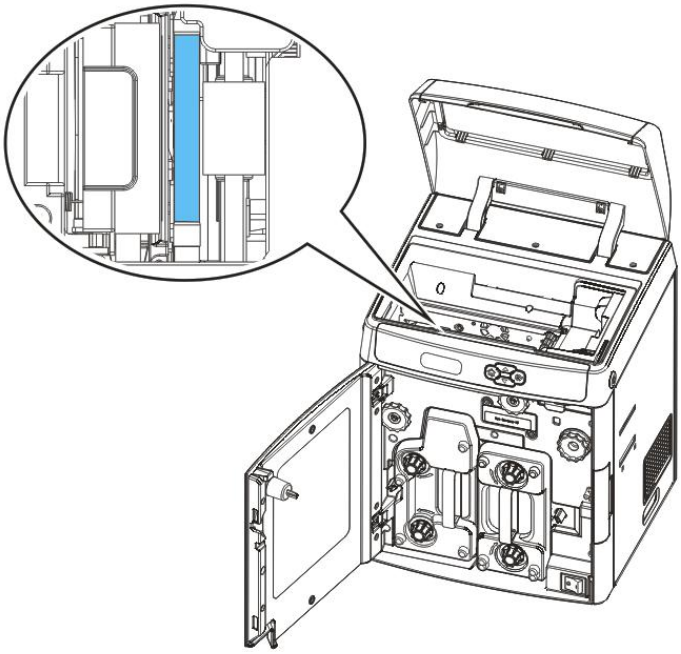

Return the front cover to its original position.

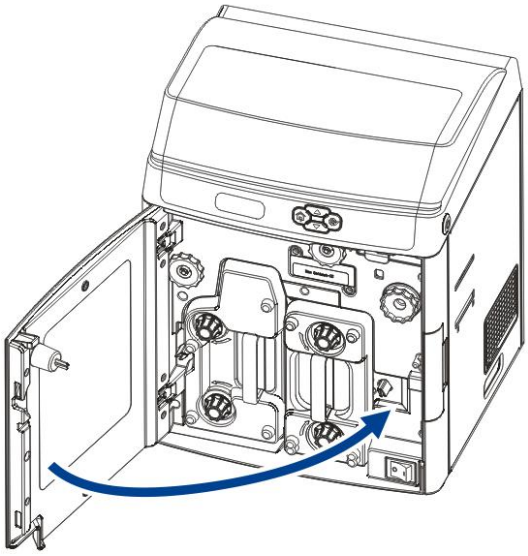

➢ Press **SET key** when the LCD screen displays [Please press the Set key].

2.4 Replacing the Cleaning Roller

One **cleaning roller** is shipped with each **ribbon** in a package. IMPORTANT: Replace cleaning roller each time you change the ribbon film.

Open the front cover:

Hold the **handle**① and open the **front cover**②.

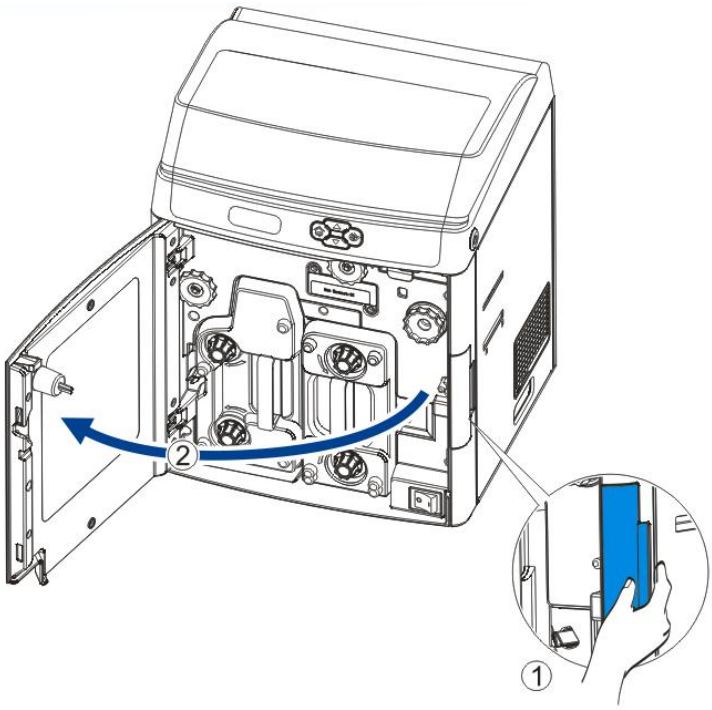

Directly pull out the **cleaning cartridge** to release it from lock position.

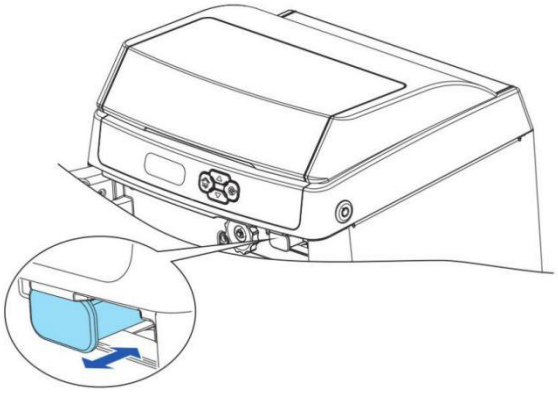

Pull the **lock**① to release the **spindle**②.

Remove the old cleaning roller.

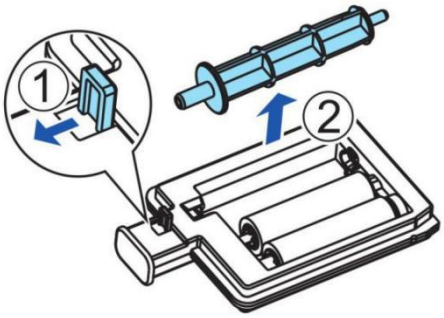

Sleeve a new **cleaning roller** into the **spindle**.

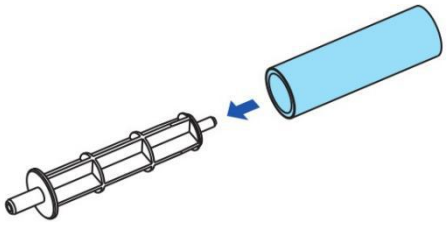

Peel off protective Sheet or coating.

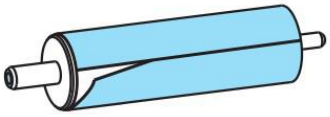

Pull the lock① and drop the roller② to its original position in the cleaning cartridge.

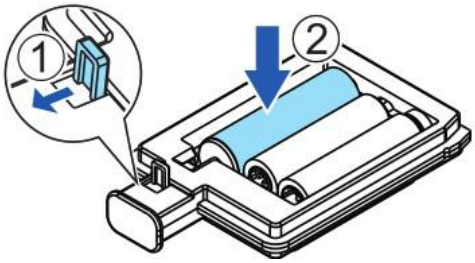

After the replacement procedure, restore the **cleaning cartridge** until you hear a “click” sound.

Return the front cover to its original position.

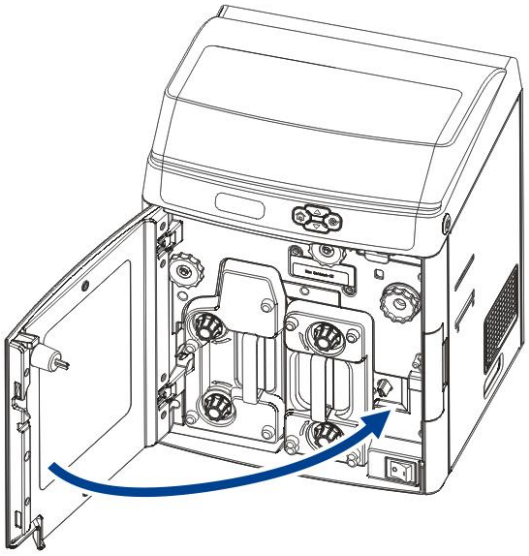

Press **SET Key** when the LCD screen displays [Please press the set key].

2.5 Installing the Output Tray

Hook the **output tray** to the opening next to the **output slot**.

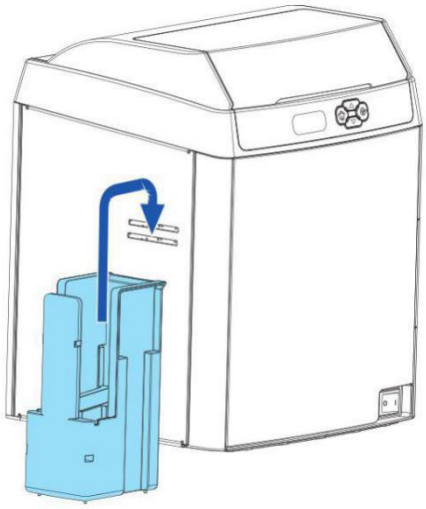

2.6 Installing the Reject Bin

Hook the **reject bin** to the opening next to the **ejection slot**.

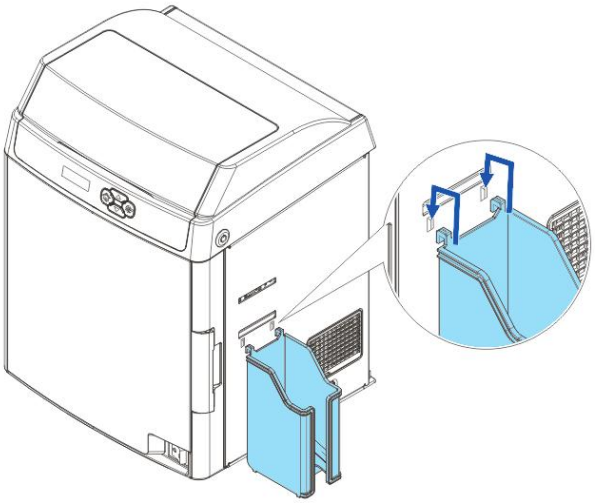

2.7 Card Printing

All Windows applications with document printing capabilities can be used with the DC7600 printer. Such as Microsoft Office suite MS-Word, MS-Access, MS-Excel, MS-PowerPoint, and the DASCOM self-designed card editing software CardEditor.

CardEditor is an editing software for Dascom smart card printers. You can quickly create and edit the content that needs to be printed with this software.

(1) Double click “CardEditor” logo to open the software, choose “Create Card” ,then click “System template”, you can select the template you want.

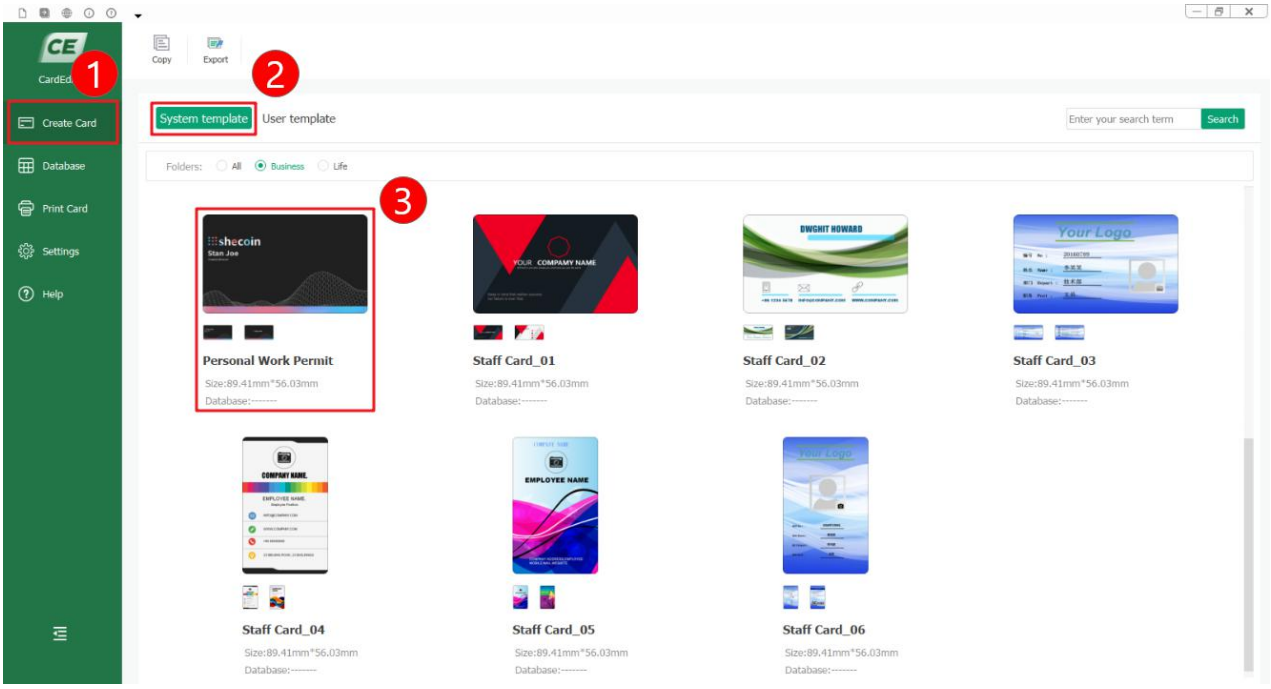

(2) Double click “Design” to enter the design interface：

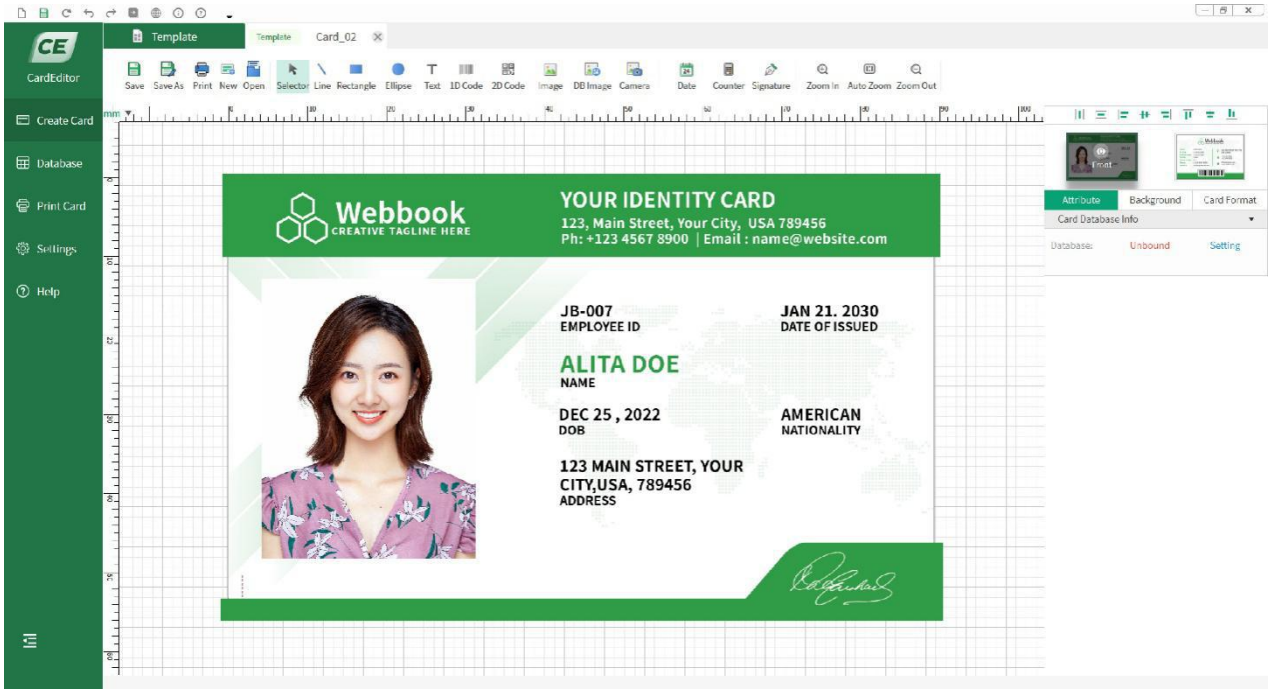

(3) On the right menu, you can see the items "Attribute", "Background" and "Card Format":

1) Choose "Attribute", you can set the database.
2) Choose "Background", you can change the background of the print content.
3) Choose "Card Format", you can change the card size and print type.
4) Click thumbnail of "Front" and "Back", you can choose the different side to edit.

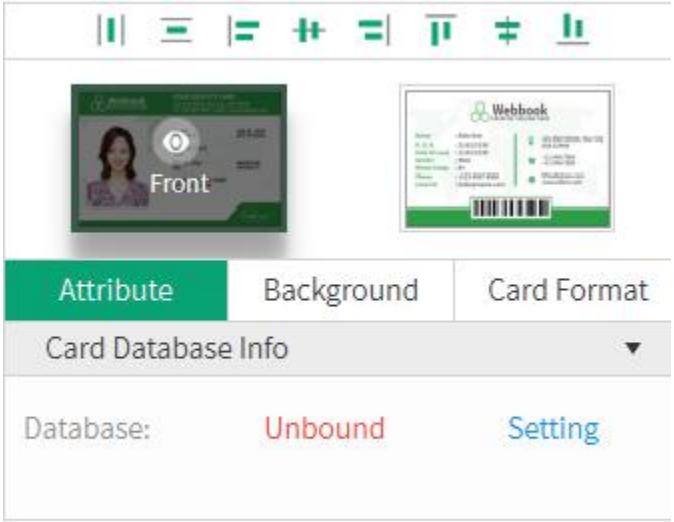

(4) The tool buttons above the working interface, as shown in the following figure, are divided into two categories: "basic editing" and "Advanced tools". "Basic editing" includes line, rectangle, ellipse, text, 1D code, 2D code and image. "Advanced tools" includes DB image, camera, date, counter, signature and RFID. You can choose them according to your need. You can select the object you added, then adjust the position. You can also select the object you added, then delete it.

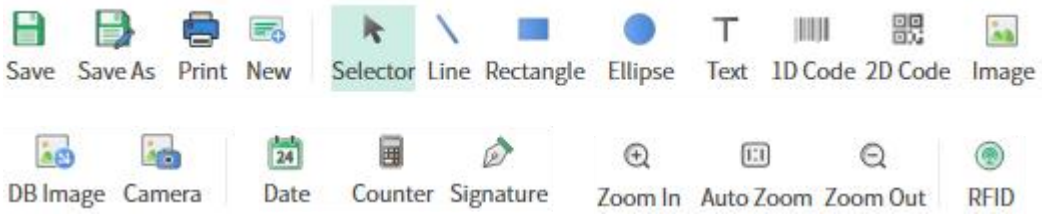

(5) Double click the template, you can edit the content, then click the “print” logo to print:

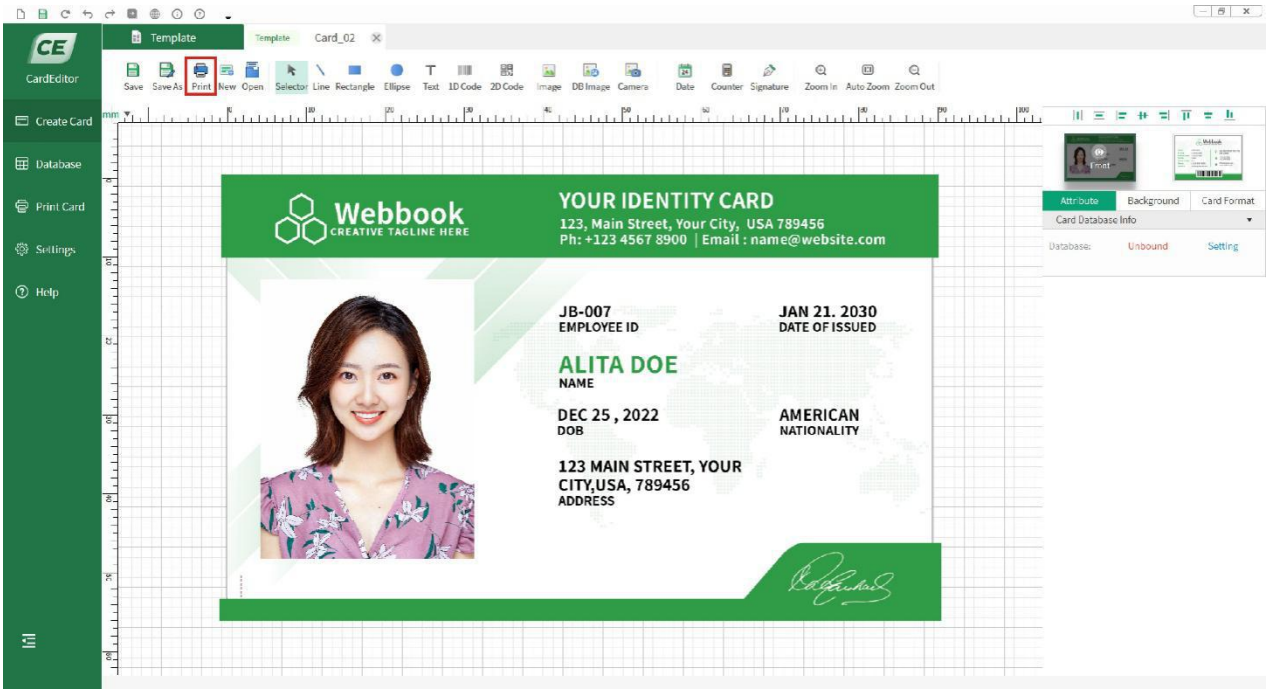

(6) You can set the amount of cards and number of copies before printing:

(Note: If "print black element" is selected, black objects will be printed with priority. That means all the black objects on the card will be placed on top. As an example, there are two objects on the template, one is a black rectangle and the other is text in other colors. When these two objects overlap, even if the text object is above the rectangle object, the printer will only print out the card with black rectangle while no text on it.)

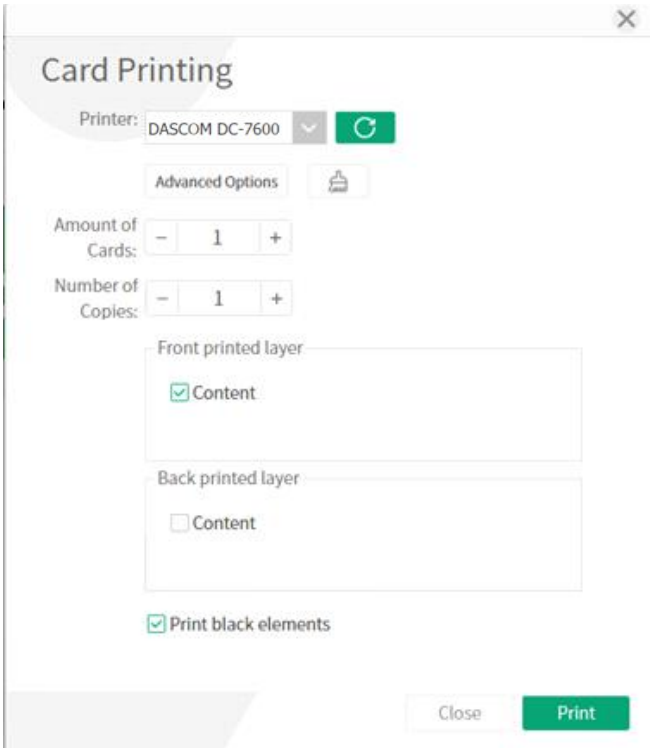

(7) If you want to modify the driver settings, such as card direction, single side or double-sided printing, card modification or processing, you can click "advanced option" to change the driver. As for popup print Settings, and then click "ok" to save Settings. Then click "print".

The main selections are “Card & Ribbon”, ”graphics”, ”graphics (Back)”, ”Encoding” and “Maintenance”.

“Card & Ribbon” Tabs

- The printing side
  User can choose front/ reverse side to print. Printer can print the image on the card reverse side and can also split the different color of the ribbon.
- Card direction:
  Portrait or landscape
- Print quantity
- Rotation
  Rotate 180° printing on the front/reverse side.
- Ribbon tabs
  User can choose the card type manually and also check the printer ribbon type automatically.
- Card thickness
  Choose thick: available for card with thickness of 0.76cm, 0.88cm and 1.00cm.
  Choose thin: available for card with thickness of 0.48cm.

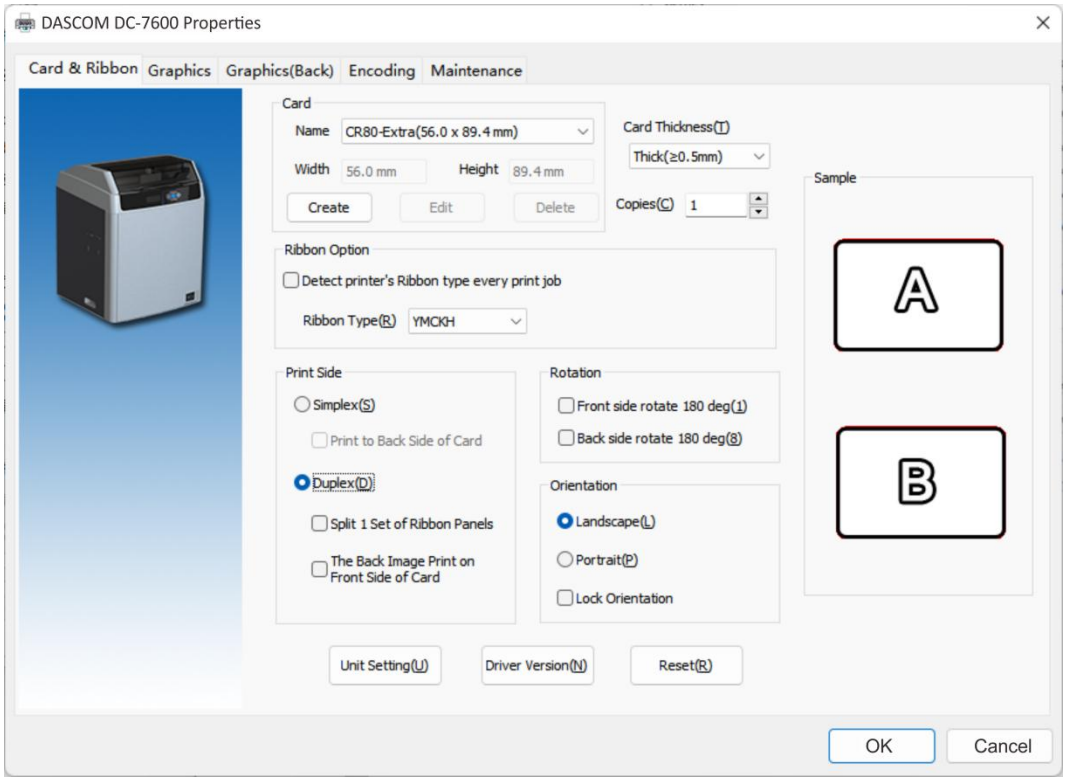

"Graphics" Tabs

- Color setting

  User can get the proper color via settings. User can also adjust the color brightness, contrast and chroma.

- Settings of Black ribbon using

  User can print black via print K color or YMC secondary colors and K color. As well as, user can choose monochrome printing, color printing, set the black valid area and the black invalid area.

- Watermarks Setting

  Watermark is a type of graphic, text, or texture mark used to identify and protect copyright. This printer can edit and print data at specific locations on the card, adding specific identification or information.

- Protected Area Setting

  The entire card surface can be set for printing, or some areas can be left unprinted.

- Gamma Adjust

- Twice Transfer Print Setting

  Double transfer printing refers to transferring an additional layer of blank film on the original basis, making the printed content more secure and increasing the strength of the card.

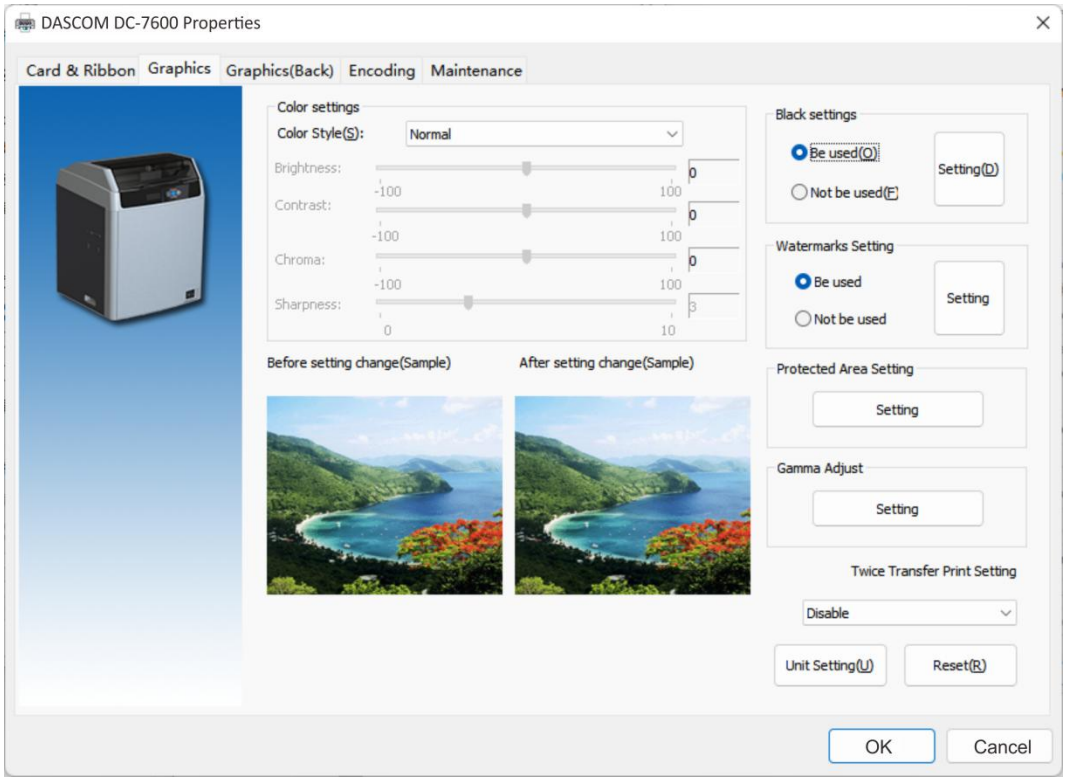

"Black settings"

- Monochrome printing or color printing

  Choose the card which is monochrome printing or color printing.

- The printing method of black data.

  Set black color via using K color to print or using YMC secondary colors and K color to print.

- The valid area of black printing

  Set up the valid area of K color printing, the area is from the top left corner (0Pixel,0Pixel)to the lower right corner(2112Pixel,1324Pixel) on the card. Use width and height to set the length and width of the invalid printing area.

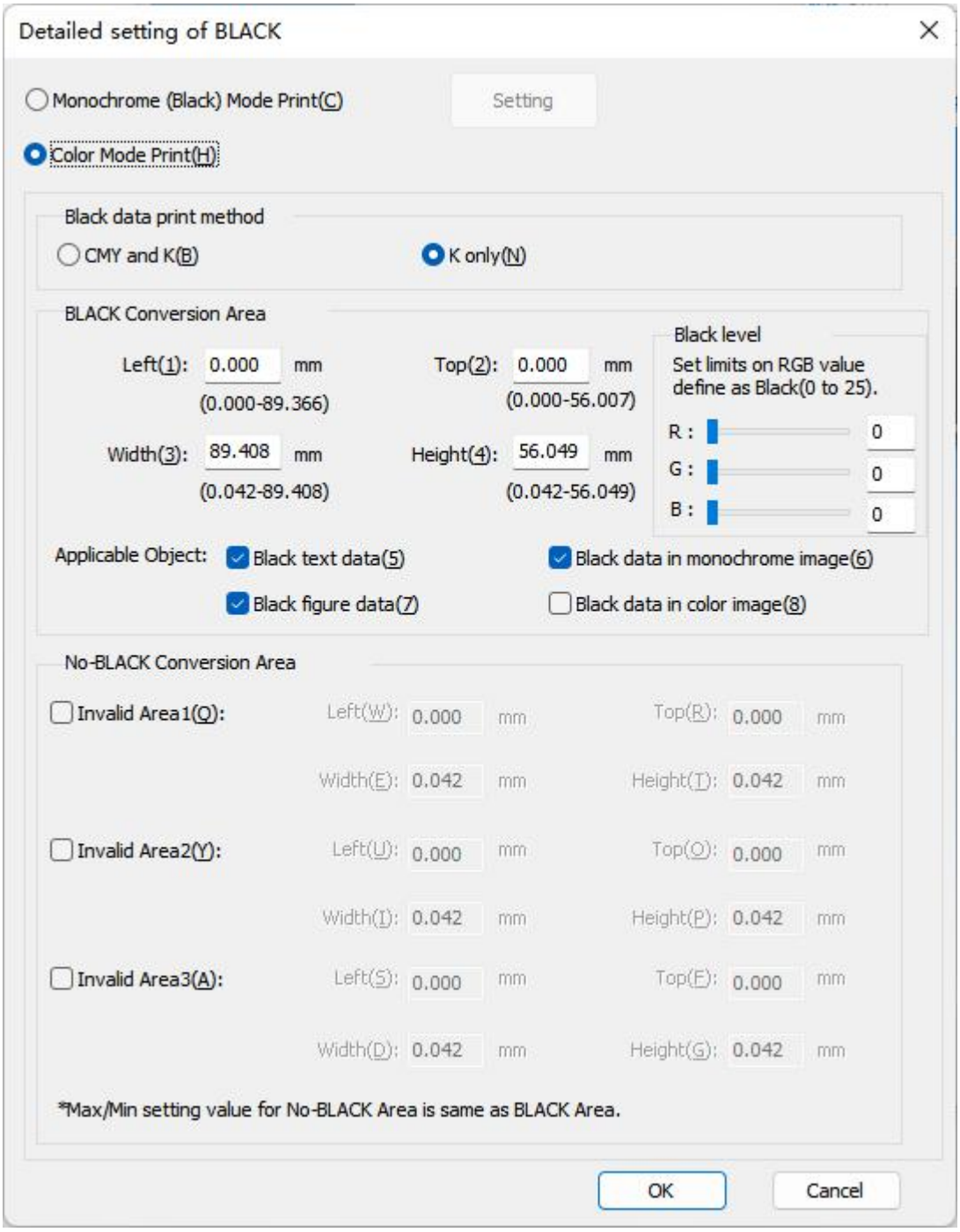

“Watermarks Setting”

"Ribbon Type (R)" in "Card&Ribbon" Tabs refers to YMCKH, YMCKI, etc. with H, I watermark layer,The watermark can only be set on the ribbon of the printing layer, otherwise the "Watermark Setting" area is gray (non editable).

- H Value (H):

  The threshold range is from 0 to 255, the larger the value is, the more obvious the printing effect of H layer is.

- Coverage areas of H layer:

  Users can customize the printing area and content of layer H. For example, user can select "None", "Full Page" and "From bitmap file".

- Bitmap's colors as coverage:

  Choose "From bitmap file", if user selects black , that is, printer will print the black area of H layer, if user selects white, printer will print white area.

- Path of custom bitmap file for define H layer:

  Click "Browse" to select the path to add a custom bitmap, which must be a monochromatic bitmap with 2112 x 1324 pixels.

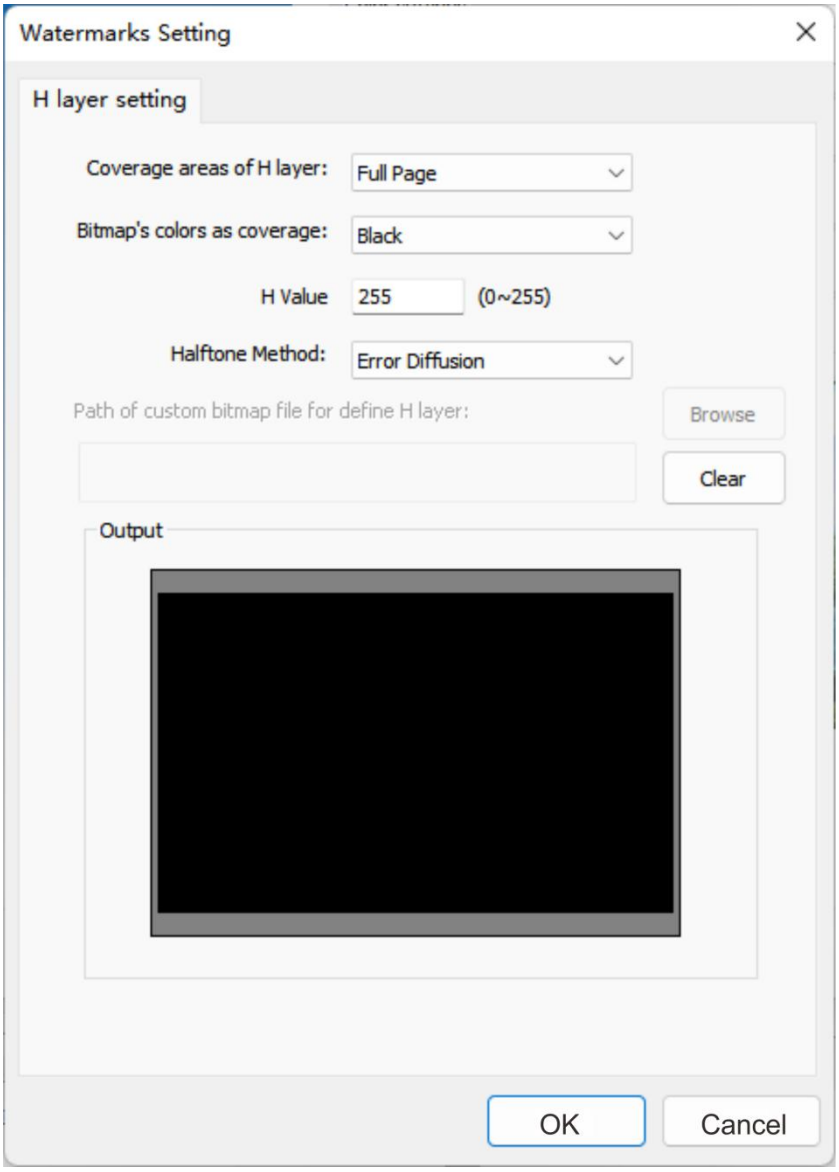

"Protected Area Setting"

- Print entire side of card
- Block printing over this area

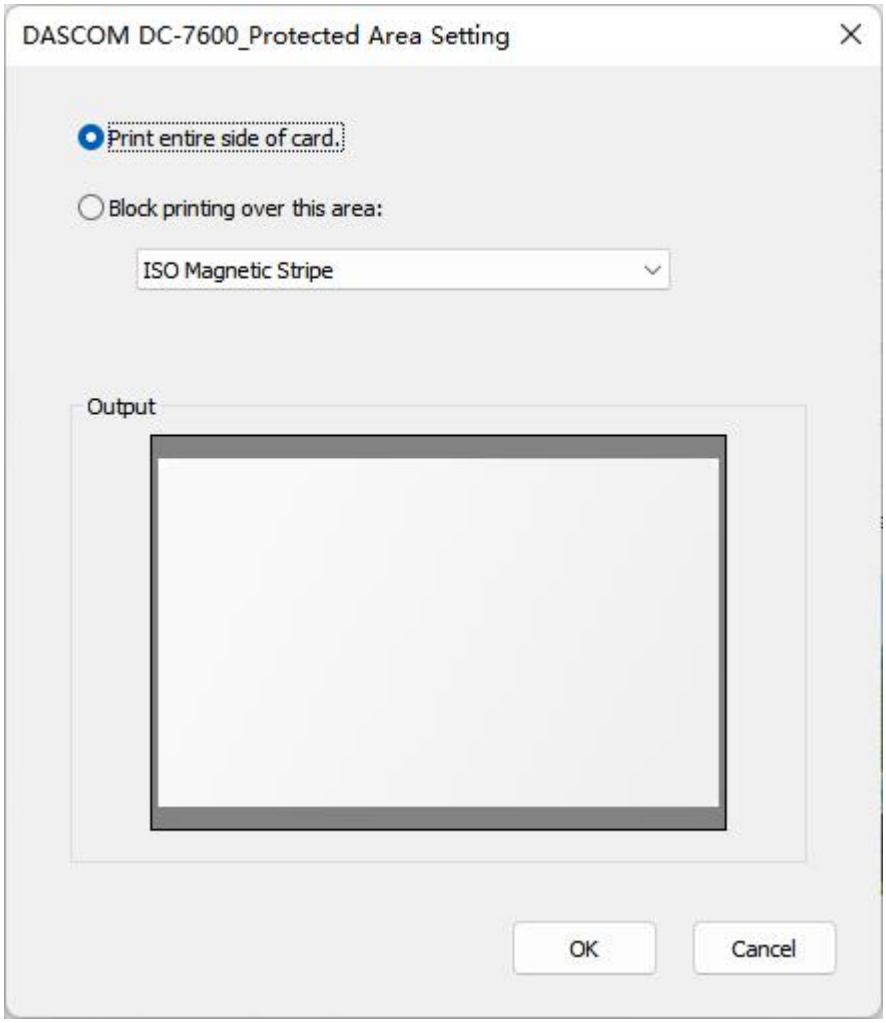

"Gamma Adjust"

- Not Used
- Independent
- Linked

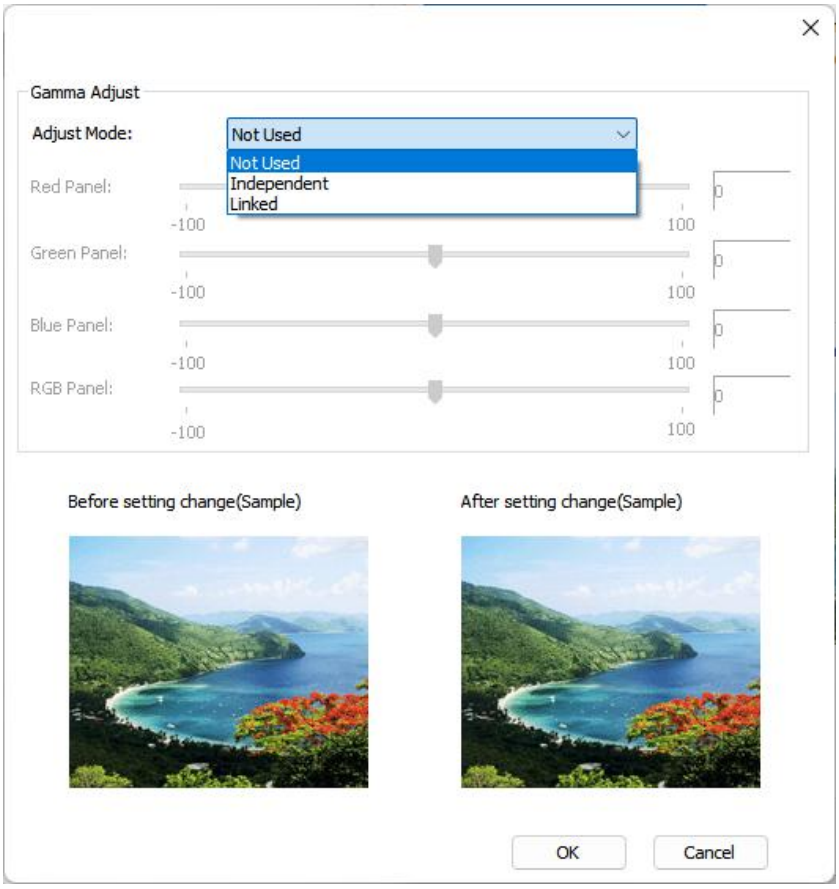

"Twice Transfer Print Setting"

- Disabel：

  Do not use double transfer function

- Blank-Content：

  First, a layer of blank film is transferred onto the card, and then another layer of film with data content is transferred onto the same card surface

- Content-Blank：

  First, a layer of film with data content is transferred onto the card, and then a layer of blank film is transferred onto the surface of the same card

“Graphics (Back)” Tabs

You need to first select "Duplex (D)" in the "Print Side" area of the "Card & Ribbon" tabs, and then click on the "Graphics (Back)" tab to set it.

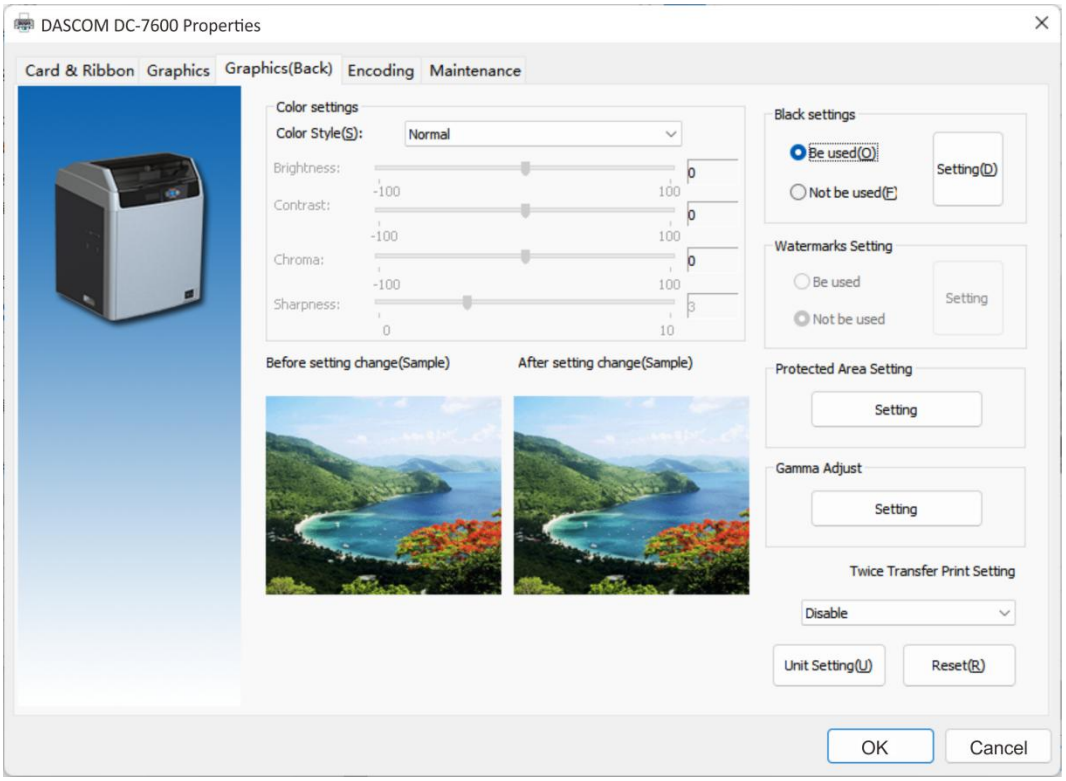

Note: The settings and parameter options for “Graphics (Back)” Tabs and “Graphics” Tabs are consistent.

"Encoding" Tabs

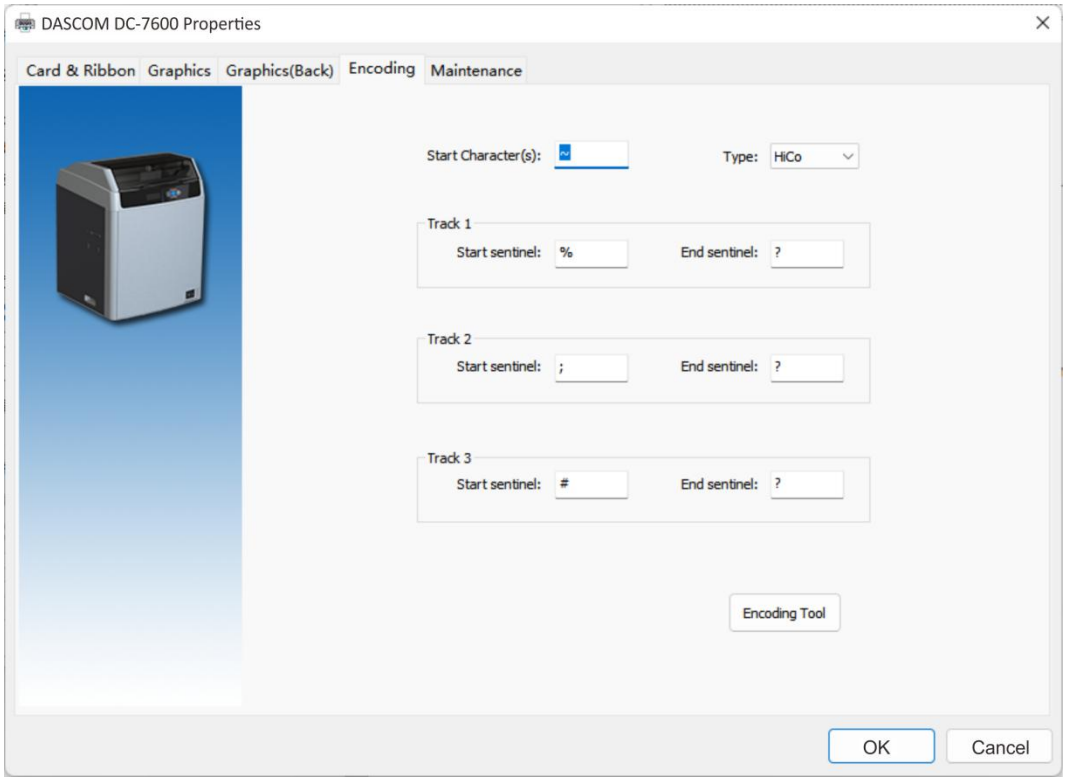

Encoding Page

Start Character(s): Magnetic encode data must start with this character(s).

Type -> Hico: Magnetic card whose type is high resistance.

Type -> Loco: Magnetic card whose type is low resistance.

Track 1: To define track 1 data in magnetic card.

Start sentinel: Data of track 1 must start with this character.

End sentinel: Data of track 1 must end with this character.

Example: ~%ABCDEDFG1234567890?

ABCDEDFG1234567890 is the data of track 1.

Track 2: To define track 2 data in magnetic card.

Start sentinel: Data of track 2 must start with this character.

End sentinel: Data of track 2 must end with this character.

Example: ~;1234567890?

1234567890 is the data of track 2.

Track 3: To define track 3 data in magnetic card.

Start sentinel: Data of track 3 must start with this character.

End sentinel: Data of track 3 must end with this character.

Example: ~#0987654321?

0987654321 is the data of track 3.

"Maintenance" Tabs

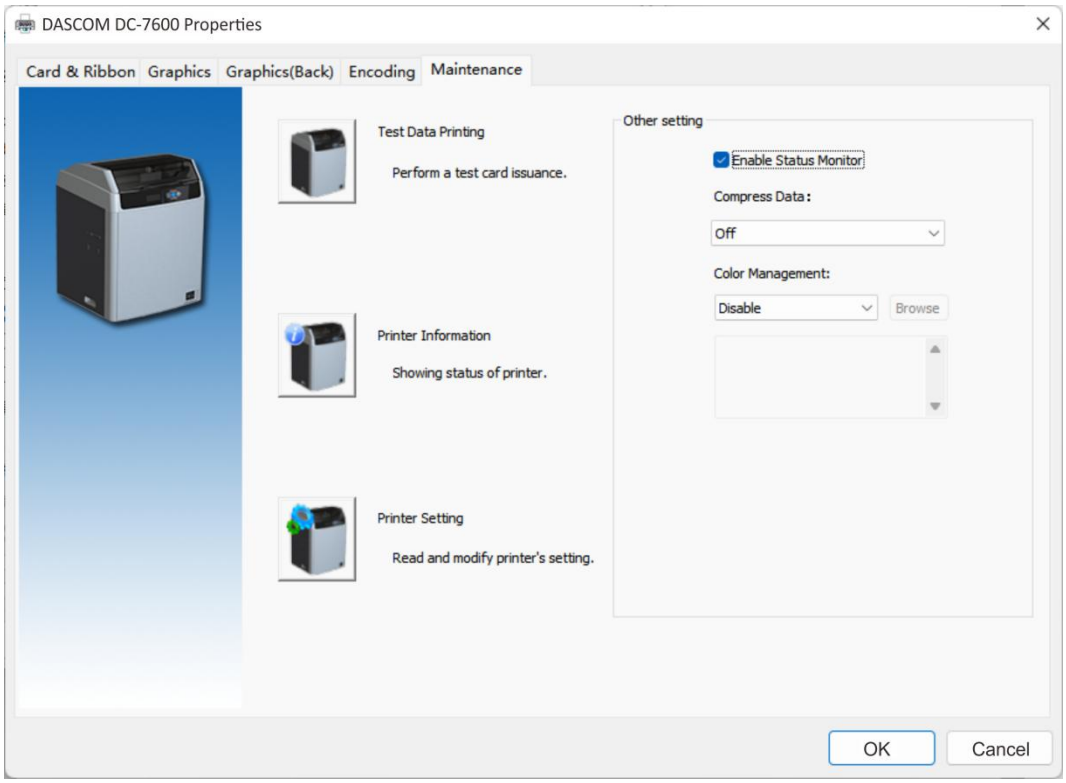

- Printing test

  Print the test content.
- Printer information

  User can check the printer DPI, the maximum printing area and minimum printing area.
- Printer parameter setting

  User can read the detailed printer parameter.
- Showing the printer status monitor

  Decide whether the monitor pops up during printing.
- Color management

  Processing optimization of Color can make the color more consistent with the color displayed by the software.

"Printer parameter settings"

- User mode

User can read the printer information, options state and various of configuration information. The printer information parameters and options state parameters only support readable. Configuration information support can read and write (reference 3.2 user mode)

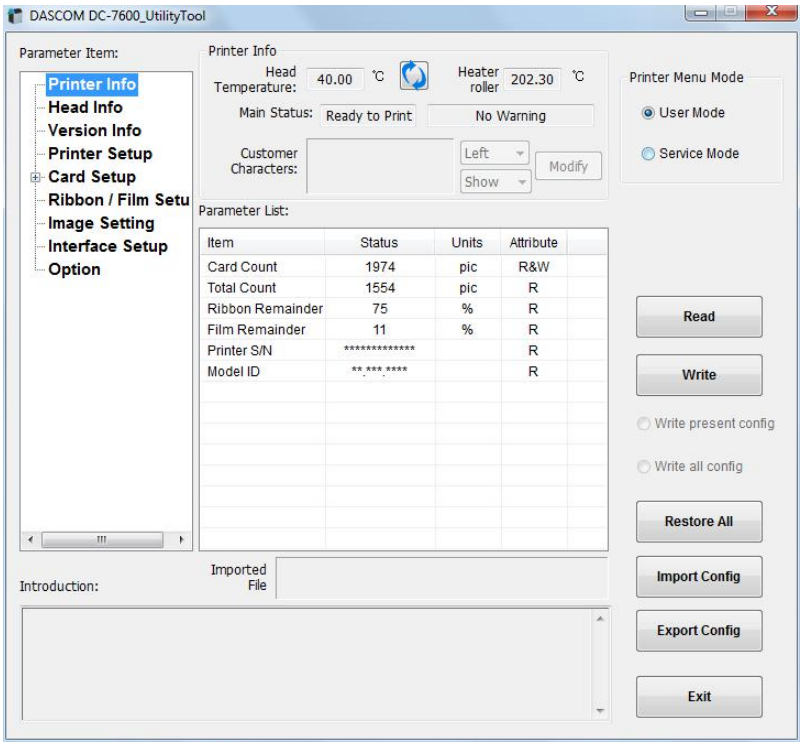

- Service mode

The password is "123456".If you want to modify it, you can follow the below steps:

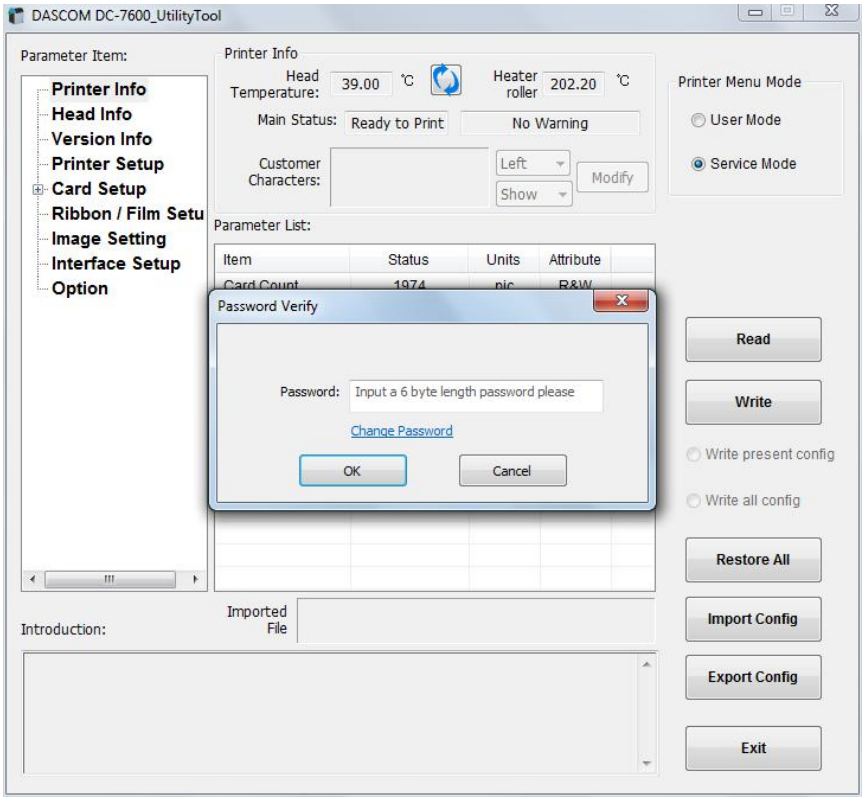

In service mode, user can modify the print position, print density, system settings, print head, option state and configuration. Please don't random change them, it may lead to poor printing effect.

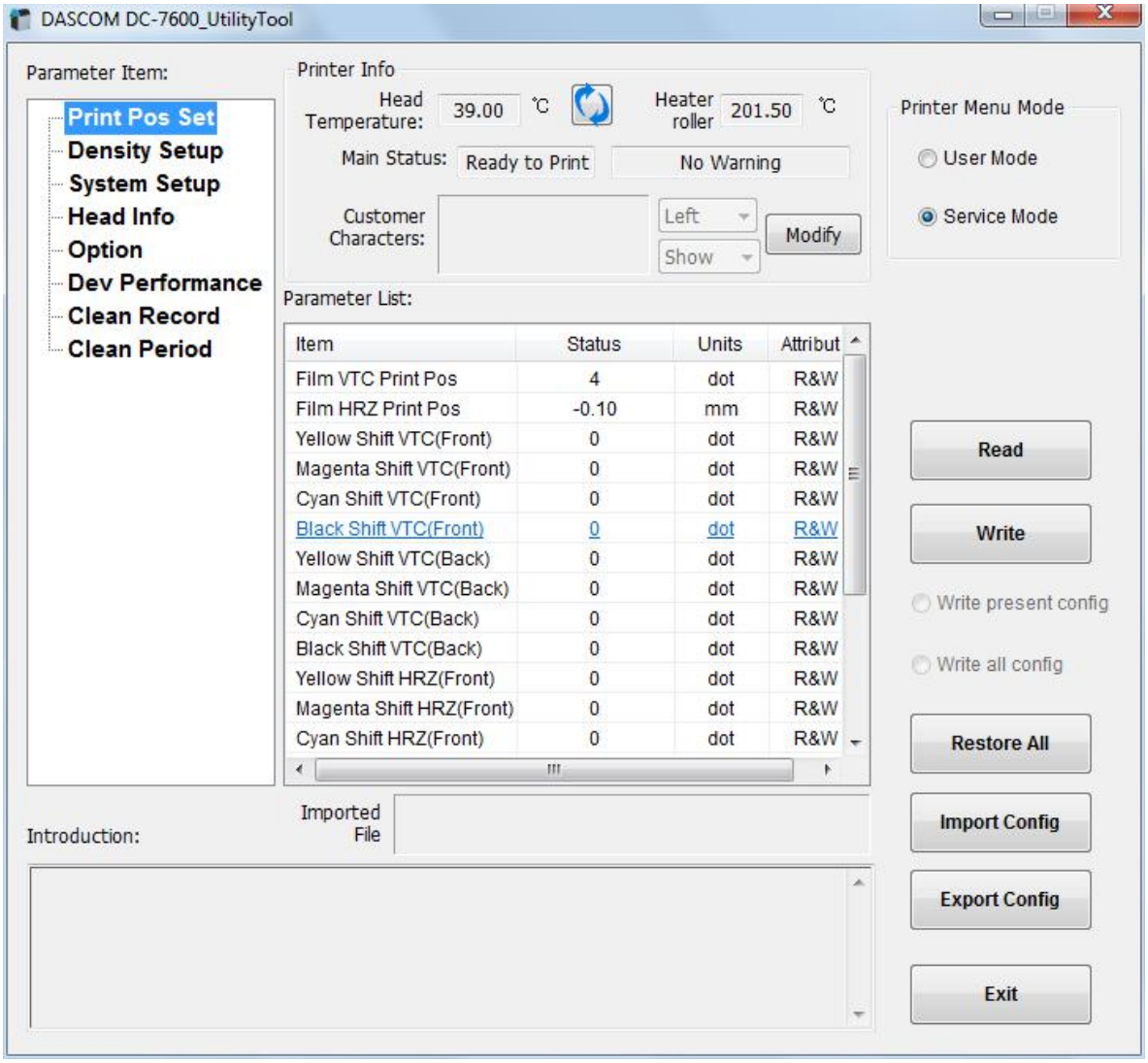

2.8 Firmware update

It's very easy to update the firmware, but if the installation of firmware is incorrect, the printer will be damaged.

Before updating, please contact DASCOM dealer for advice on the implementation of the upgrade. In general, updates are required only when a problem or failure is explicitly identified in DASCOM.

To download the update, please visit www.dascom.com:

The steps to update firmware:

(1) Select the control panel on the start key in the lower left corner of the Windows taskbar.

(2) Select the device and printer, then double clicks.

(3) Choose the printer property on the printer menu.

(4) Select the "tools" label and click the printer icon.

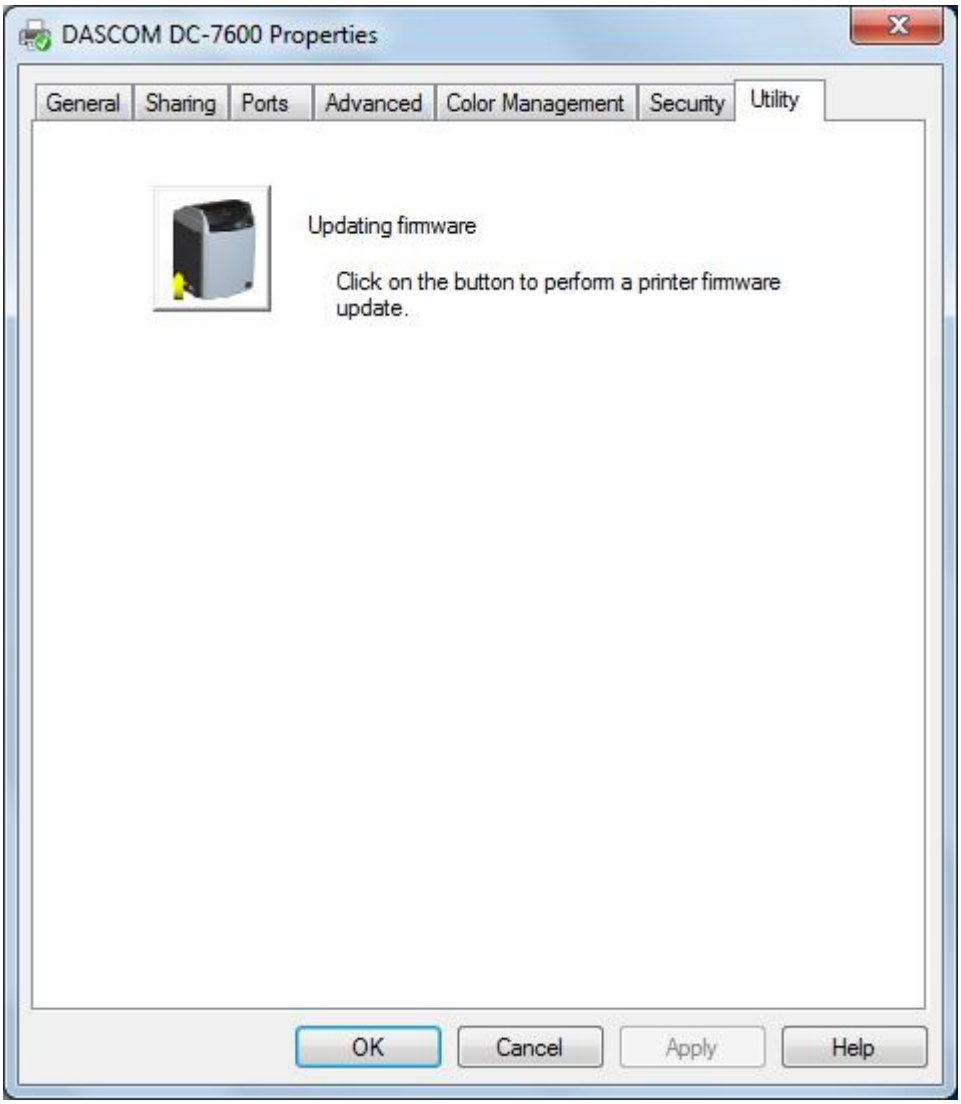

(5) Choose the firmware need to be updated, click “Update”. When the update is finished, click “Exit”.

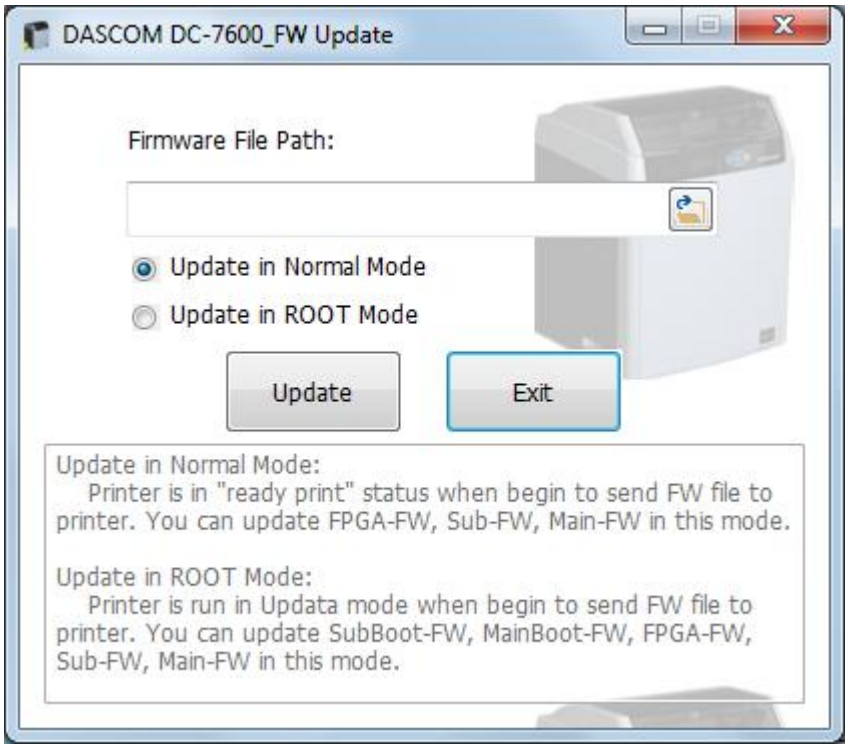

(6) After upgrade, you can create the personalization card with this printer.

Do not interrupt the transmission between the computer to the printer during the download. (Such as switch off the printer or computer power, unplug the cable, etc.). Otherwise, printer might not restart. In case of such failure, please contact DASCOM dealer.

CHAPTER 3. NORMAL MODE AND USER MODE

You can change between **Normal** and **User Modes** when the printer is operating.

This section outlines the differences between these two modes and how to switch from one to the other.

3.1 Normal Mode

Normal mode: After start up, the printer goes into Normal Mode in which the printer can print cards.

In this mode, after you press the ▲**Key** for 1 second, the LCD displays the unused ribbon and retransfer film indicated by a series of "*"marks. Each "*"represents 20% remaining:

```
Ribbon      E [****]F
Film        E[*    ]F
```

In this mode, after you press the ▼**Key** for 1 second, the LCD displays the temperature of the **heater unit** and **print head:**

```
Heater Temp   201℃
Head Temp     40℃
```

Normal Mode Message List:

Initialize	The printer undergoes system diagnostic and initialization. Cards remaining in printer from a previous irregular session will be ejected.
Heating	The heater unit is warming up.
Ready	The printer is awaiting host requests or commands.
Printing	The printer is in a printing session.
Power Save Mode	The printer is in an energy saving state.

3.2 User Mode

User Mode allows changing the parameters and checking the status.

■ Steps to change from Normal Mode to User Mode:

1) After LCD displays **[READY]**, press **Menu/Exit Key** for 1 second then release it. The LCD changes its display to [**Printer Info**.], which is the entry menu in User Mode:

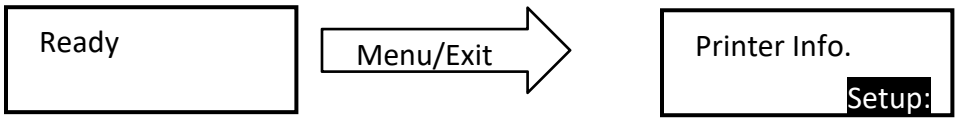

2) Press【 Menu /Exit】**Key** for 3 second then release it. The LCD shows [Choose mode]. Press ▲ or ▼ Keys to select **User Mode** or **Service Mode**:

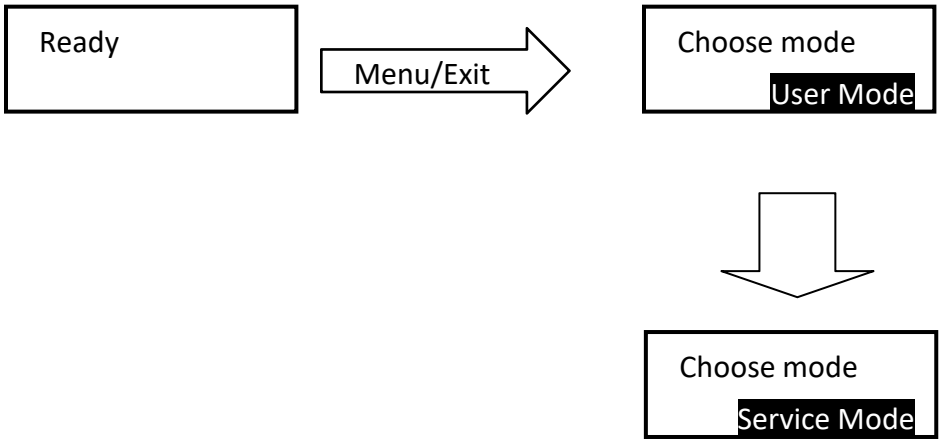

Even when the printer is in an error state, you can change modes.

■ Step to return to Normal Mode from User Mode:

1) Continually press **Menu/Exit Key** until the LCD shows [Quit the Menu]. Then press **SET Key** to return to Normal Mode:

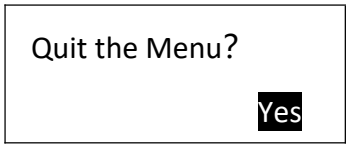

Function of four keys in User Mode:

- Menu/Exit Key: back to its parent menu, i.e. one level up in the menu hierarchy.
- ▲ Key: previous item. ▼Key: next item.
- **SET Key**: an affirmative response to the second line in the LCD.

- Moving between menus in the same level

  Section 3.3 lists out eleven menus in the same level, from **Printer Info**, **Version Info**, ... to **Reset User Default**. Consecutively pressing ▼/▲ **keys** leads to your designated menu. For example:

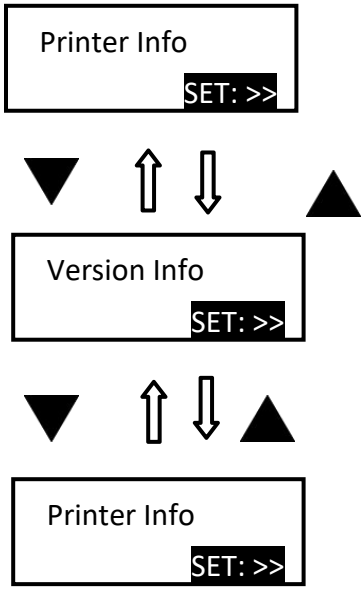

- Entering a sub-menu (go down one level in the menu hierarchy)

  Sections 3.3.1~3.3.11 are the sub-menus associated with the corresponding parent menus listed in Section 3.3.

When SET: >> appears on the second line of the menu, pressing **SET Key** enters available sub-menus or parameter values. Below, the right menu is the sub-menu of the left one.

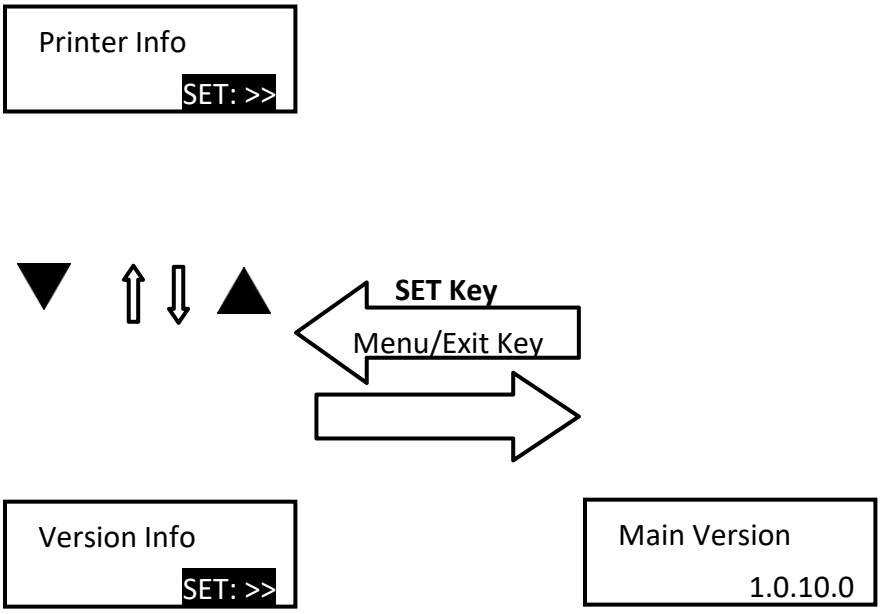

- Consecutively press **Menu/Exit Key** until the LCD shows [Quit the Menu]. Then press **SET Key** to return to Normal Mode:

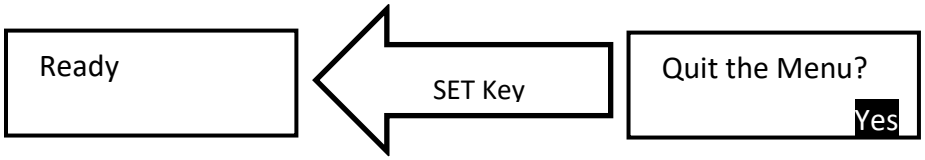

SET Key must be pressed to save the newly changed value.

Pressing **Menu/Exit Key** or switching off the printer will not save any newly changed value(s).

3.3 The major menus

- Printer Info
- Head Info
- Version Info
- Printer Setup
- Card Setup
- Ribbon/Film Setup
- Image Setup
- Interface Setup
- Option
- Reset User Default

3.3.1 Sub-menus for Printer Info

View the utilization history of this printer in each sub-menu:

- Card Count
- Print Count
- Ribbon Remainder
- Film Remainder
- Printer S/N

For quality assurance at the factory, it is necessary to run various print tests on the printer. A value of tens or more for Card Count is normal during manufacturing of your printer.

3.3.2 Sub-menus for Head Info

View the print head information in two sub-menus:

- Print Count
- Print head S/N

Record the new print head serial number after replacement; otherwise, failure to do so affects print quality and voids the warranty for this print head.

3.3.3 Sub-menus for Version Info

View the latest version(s) in this printer:

- Main Version
- Sub Version
- FPGA Version
- Main Boot
- Sub Boot

3.3.4 Sub-menus for Printer Setup

View and change operation parameters:

- Buzzer: OFF\ON
- Power Save Mode: Sleep Mode\Delay Power Down
- Language: Chinese\Japanese\English
- LCD Contrast: 128
- LCD Light: OFF\ON
- Card detection: OFF\ON (In "ready to print" state to detect whether card slot is empty)
- First Transfer Wait: 0~60(minute)

First Transfer Wait: When the heating platen reaches the transferable printing temperature for the first time, the printer will implement the transfer process after the setting time. (Wait time, start the timer after the heating platen reaches the target temperature, whether the printer prints or not.)

Sleep Mode: Time elapsed to sleep mode from idle.

Delay Power Down: Time elapsed to cut off the main power from sleep mode.

Setting Name	Valid Settings
Sleep mode （Default）	Off， 5~ 120 (minutes)
Delay power down	Off， 5~ 120 (minutes)

3.3.5 Sub-menus for card setup

View and change card properties:

- Card type: PVC/PET/PET-G/card 1/ Card 2/ card 3
- Decurl Time(Front):0-5 (need to understand these numbers)
- Decurl Time(Back) : 0-5
- Std card exit: LEFT SIDE\RIGHT SIDE
- Error card exit: LEFT SIDE\RIGHT SIDE
- Magnetic/IC Pos: Front\Back

- Eject Face: Auto\Front Up\Back Up
- Card Feed Mode: card cassette\Right(Manual)\Right(Auto)
- Card thickness: thick\thin

Card Type

Valid Settings	Details
PVC (Default)	Apply optimized retransfer conditions for standard PVC cards.
PET	Apply optimized retransfer conditions for standard PET cards.
PET-G	Apply optimized retransfer conditions for standard PET-G cards.
Card1（aa，bb)	aa= re-retransfer speed, when the value of aa is increased, the re-retransfer speed get faster; when the value of aa is reduce, the re-retransfer speed get slower. bb= default re-retransfer temperature, when the value of bb is increase, the re-retransfer temperature is increase; when the value of bb is reduce, the re-retransfer get lower.
Card2（aa，bb)	
Card3（aa，bb)	

35mm/s and 202℃ are the default settings for Card 1-3 (Card Type is cut off above)

Excessive heat can bend cards. Even optimized retransfer conditions (speed/temperature) sometimes causes cards to bend. Change this setting to minimize the degree of bend. User can set up 0-5 (S) for correcting. The correcting time of front: the default value is “1”;The correcting time of reverse side :the default value is “0”; 1 means correct the bend card for 1 second;0 means do not correct the bend card.

Card loading face（IC /Chip card loading）

Valid Settings	Printing Surface (when singled-side printing)	Rear Side (when singled-side printing)
Standard (Default)	Contact IC	ISO chip

	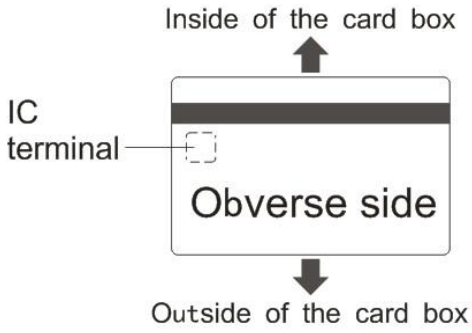	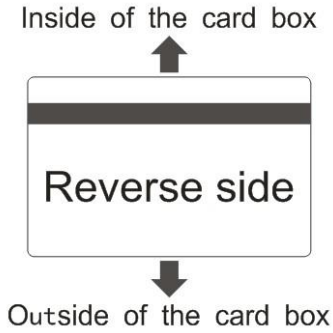
back	ISO chip 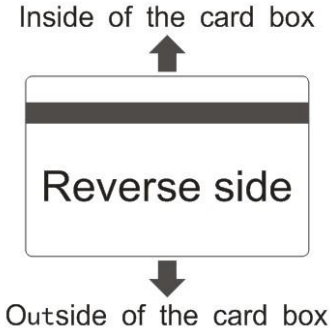	Contact IC 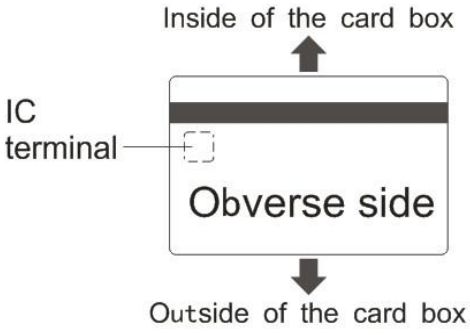

Eject Face:

Valid Settings	Details
Standard （Default）	Back Up
Front	Front Up
Back	Back Up

Card Feed Mode:

Valid Settings	Details
card cassette	Cards are automatically fed from the card cassette.
feed cards automatically on the right side	After receiving the printing data 0~13 seconds, the printer feeds cards automatically on the right side.
Manually feeding	Follow instructions shown on LCD display. Manually insert a card from the right insertion slot.

3.3.6 Sub-menus for Ribbon/Film Setup

View and change ribbon/retransfer film:

- Ribbon Type: YMCK YMCKH YMCKK YMCKI YMCKSI
- Film Type: Normal
- Ribbon near end(%): 0~100
- Film near end(%): 0~100

Ribbon Type:

Valid settings	Product code
YMCK	
YMCKH	
YMCKK	
YMCKI	
YMCKSI	

Film Type:

Valid Settings	Product Code
Normal	
Special	

When the unused amounts of ribbon/retransfer film reaches the values specified in Ribbon near end(%) and Film near end(%), respectively, the LCD displays warning messages: “Check Ribbon” or “Check Film”.

3.3.7 Sub-menus for Image Setup

View and manage the color settings:

- Yellow Balance: ±64
- Magenta Balance: ±64
- Cyan Balance: ±64
- Black Balance±32
- Color Brightness: deep, medium, shallow, customer setting

3.3.8 Sub-menus for Interface Setup

View and change the interface settings:

- Printer ID: 0-15
- IP Type: Static/DHCP
- IP Address: 192.168.0.12
- Subnet Mask: 255.255.255.0
- Default Gateway: 192.168.0.1
- MAC Address:
- Timeouts(s) : 10
- USB ID: OFF/ON

3.3.9 Sub-menus for Option

- Magnetic Encoder
- IC R/W1
- IC R/W2
- External Box

3.3.10 Sub-menus for Reset User Default

- Reset User Default
- Reset Service Default

CHATPER 4. CLEANING

4.1 Cleaning with a Cleaning Card

Use the Cleaning Card provided to clean the Card Transport Roller if cards do not feed smoothly.

We recommend cleaning the rollers after printing 1,000 cards.

Cleaning Cards can only be used once and cannot be reused. Use a new Cleaning Card with the adhesive side down every time you clean the rollers. Do not touch the platen with hands.

① Power on the printer while holding 【▲】 and 【▼】 ;

② Press 【▲】 or 【▼】 to find the "Cleaning" option, then press SET key. The second line of the screen shows "cooling ***℃". "***℃" indicates current temperature of the heating roller;

③ When [Cool Down ---] is displayed, wait until the figure drops to 70 ℃. When [Remove Film] is displayed, open the Front Cover, and remove the Retransfer Film;

④ Close the Front Cover, [Remove Cards] is displayed. (If there's no card in the slot, just ignore this step) ;

⑤ After removing the cards, [Set Cleaning Card] is displayed, put the cleaning Card in the card Feeding Slot;

⑥ When [SET : Start] is displayed, press the **SET Key** to start cleaning;

⑦ After cleaning, [Over, Put Film Again] is displayed, open the Front cover and put in the film, then close the cover;

⑧ After closing the cover, [Restart Printer] is displayed;

⑨ Restart the printer, the printer will be initialized. After initialization, user can continue printing.

4.2 Cleaning the Cleaning Roller

You can clean the Cleaning Roller before printing.

Clean the cleaning roller if cards are printed with missing colors or if there are foreign objects on them.

Please refer to section 2.8.

4.3 Cleaning the Feeding Roller

Clean the Feeding Roller under the Card Feeder Cassette if cards do not feed smoothly into the printer.

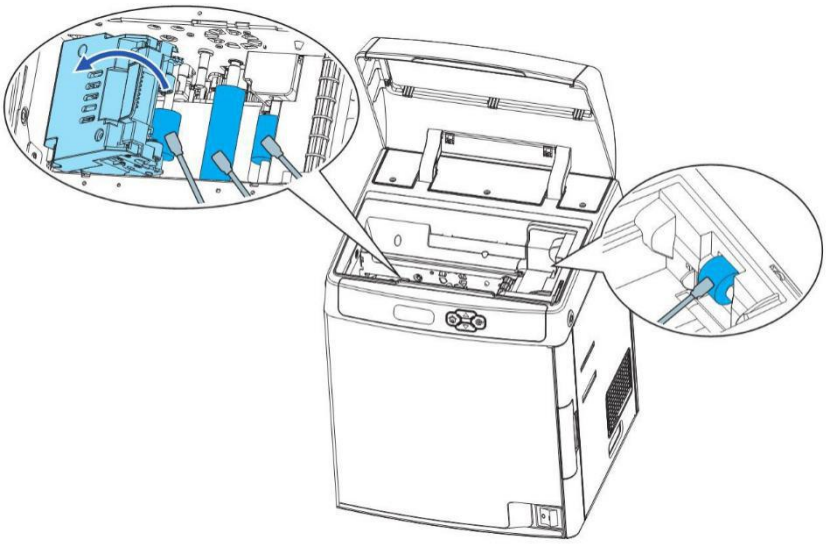

① Turn off the power.

② Open the top cover, and remove the Card Case.

③ Wipe the roller clean with cleaning stick.

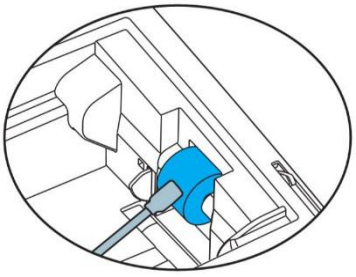

④ Load the Card Feeder Cassette.

⑤ Close the Top Cover.

Wait for 2minutes, if you want to use the printer.

You can clean the feeding roller of the secondary transfer part at the bottom of the top cover when you find the printing position on the printed card is beyond the scope of adjustment or there is a blank on the edge of the printed area.

4.4 Cleaning the Transport Roller

① Turn off the power.

② Open the top cover, and remove the Card Feeder Cassette.

③ Open the Front Cover and Top Access Cover.

④ Lift the de-curl section.

⑤ Wipe the roller clean with cleaning stick.

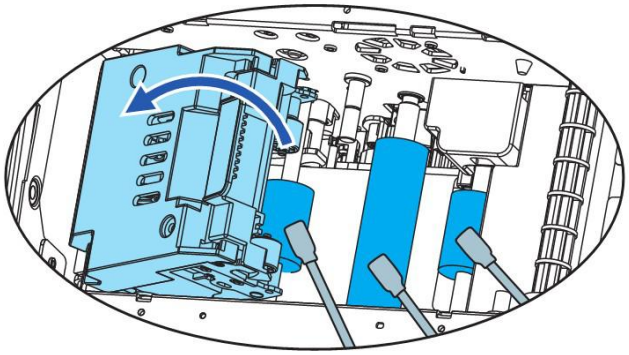

⑥ Close the Top Access Cover and Front Cover.

4.5 Filter Cleaning

If the filter becomes clogged or dirty, dirt may enter the printer. It is recommended the filter be cleaned monthly.

① Turn off the power.

② Remove the filter cover on the rear of the printer.

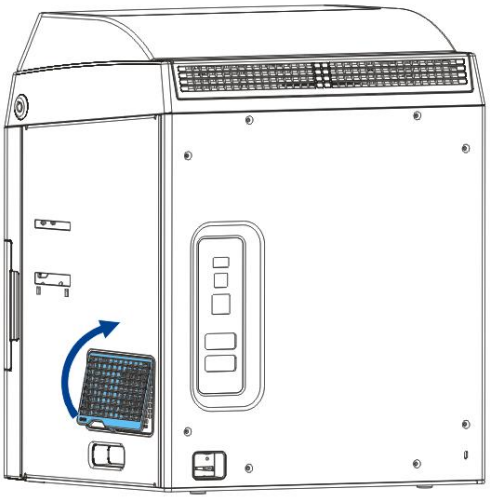

③ Take out the filter.

④ Use a vacuum cleaner or similar to remove dirt that is adhered to the filter or wash it.

⑤ Press the filter; prevent it from inhaling by the vacuum cleaner.

⑥ Attach the filter cover to the printer.

CHATPER 5. TROUBLESHOOTING

5.1 Warning Messages and Troubleshooting

This printer is designed for minimal user intervention. Occasionally, the LCD displays messages to advise users to take corrective actions.

After clearing an error, press SET to initialize the printer and [Ready] will be displayed.

- Warning/Error List

Display	Solution
Press **SET Key**	Push the **SET Key** once
Feeder empty	Card cassette is empty. Refill cards to the feeder. Press **SET Key** to resume printing.
Cover Open	Close the front cover tightly
Temp Disorder	Ensure the printer is operating at the specified ambient temperature. Then restart the printer
Check Ribbon/Film	Cause: The unused ribbon/retransfer ribbon reached the levels set in “Ribbon Near End” or “RTM Near End”. Action: Beware if unused ribbon/retransfer film is sufficient for your print job.
Ribbon End	Do not turn off power. Refer to Section 2.2 to replace a new ribbon. Press **SET Key** to clear this warning and the printer resumes the previous printing after initialization.
Film End	Do not turn off power. Refer to Section 2.3 to replace a new retransfer film. Press **SET Key** to clear this warning and the printer will resume previous printing after initialization.
Invalid Ribbon	Probable Cause: Unrecognized ribbon. Action: Do not turn off power. Refer to Section 2.2 to reload the ribbon if ribbon is skewed. Or, check if ribbon type is YMCK/YMCKK. Press **SET Key** to clear this warning and the printer will resume previous printing after initialization.
Invalid Film	Do not turn off power. Open the front cover to check if any abnormality withe retransfer film. Correct the fault and close the top cover. Press **SET Key** to clear this warning and the printer resumes the previous printing after initialization.

Display	Solution
Film Jam	Probable Cause: Retransfer film winding problem. Action: Do not turn off power. Refer to Section 2.3 to reload the retransfer film. Press **SET Key** to clear this warning and the printer will resume previous printing after initialization.
Ribbon Jam	Probable Cause: Ribbon winding problem. Action: Do not turn off power. Refer to Section 2.2 to reload the ribbon. Press **SET Key** to clear this warning and the printer will resume previous printing after initialization.
Feeder Card Jam	Pressing SET as LCD display shown may eject jammed card after initialization. If the fault is not cleared after initialization, turn the rollers manually to clear jammed card
Flip Card Jam	Pressing SET as LCD display shown may eject jammed card after initialization.
Flip Card Jam	If the fault is not cleared after initialization, turn the rollers manually to clear jammed card
Printer Card Jam	Do not turn off power. Open the front cover. Turn the rollers to clear jammed card. Close the front cover. Press **SET Key** to clear this warning and the printer will resume previous printing after initialization。
Magnetic? Card Jam	Pressing SET as LCD display. The error may be corrected after initialization and printing resumes. If initialization cannot clear the fault, manually turn the rollers to clear jammed card.
Wait Temp ***℃	Wait for the printer to warm up to its operating temperature.
RFID_AUTH_E RROR	Check if genuine ribbon is used. Next, check if the ribbon has an RFID ring. Press SET as the LCD shown to initialize the printer.
Call Support	Contact your reseller's service support team to report Error Code(s) displayed on the lower right.

Contact your reseller's service support team if you find errors not listed above. Please inform Error Code displayed on the lower right of the LCD.

5.2 Valuable Help from You for Troubleshooting

Help us identify the following for us to resolve your problem(s):

- The version number of the software installed.
- You can confirm the version number of driver installed in your MicrosoftWindows PC as follow steps:

① Press the start button in the lower left corner of the Windows taskbar to select the printer and fax.

② Select the printer, double clicks.

③ Select the printing preferences on the printer menu.

④ Turn to the card TAB, then click the version.

5.3 Troubleshooting

Do not attempt to use any tool to fix any problem. This may cause serious damage to the printer.

5.3.1 Faults Related to Printing

No print out?

① Check the printer driver

Check compatible printer driver for Microsoft Windows

Check if this printer is the default driver in Microsoft Windows.

② Check if power is connected to the printer

Check if the printer is connected correctly to power.
Check if the LCD display shows: **READY**.

Confirm power accessories provided for this printer are correctly installed.

③ Check the USB cable

Check if the USB cable is connected to your printer and your host.

④ Check the ribbon and the retransfer film

Check if the ribbon and retransfer film are properly installed. Check if associated parts are locked in properly.

⑤ Check card jam

Check if any cards remains in transport area. Check if any card jam.

⑥ Print the test card

You can realize the reverse steps refer to this section.

Blank card ejected?

① Check the ribbon and retransfer film

Check if ribbon/ retransfer film run out or are damaged. Replace them if necessary.

② Check if print head is damaged. Print test pattern.

If failed to print the test pattern, contact local reseller for support.

Is the printing quality dissatisfactory?

Faults	Probable Cause	Corrective Actions
Defective Spots	Dirty Card Surface	Check that card surfaces are clean and dust free. Use new, clean cards.
	Cleaning Roller	Clean the transport rollers
White Line	Ribbon not properly installed	Check the proper installation of the ribbon and retransfer film. Check if ribbon/retransfer film are folded up.
	Dirty or defective print head	Please contact local reseller.
Vague or Light Image	Improper ribbon/retransfer film installation	Check the proper installation of the ribbon and retransfer film. Check if ribbon/retransfer film are folded up.
	Ribbon not synchronized	Open and close the front cover to synchronize the ribbon.
	Dirty printer or cleaning rollers	Clean printer
	Non-genuine cards	Check if your cards meet specifications. Recommend that you purchase cards from Dascom authorized reseller. If the problem persists, please contact your Dascom reseller.
Bent Cards	Substandard retransfer process.	Set de-curl time. Correct card curl from Section 5.3.1.
Print peels off	Substandard retransfer process.	Make sure ribbon and film are installed correctly. And set the retransfer parameters.
Blank Cards	Improper ribbon installation	Check that print ribbon and retransfer film are installed properly.

Incomplete printout?

① Check manual settings

Check card software design layout matches card dimensions.
Check the landscape/portrait orientation in the driver.

② Check interface cable

If the text is printed in strange colors, use the USB cable supplied with the printer.
Check secure and proper connection between printer and your computer.

Try another cable.

③ Check if the printer is clean

See Section 2.3 to clean/replace cleaning rollers.

④ Check if cards are clean

Take precautions to keeps cards free from dust and contamination.

⑤ Check ribbon and retransfer film

Check if ribbon and retransfer film are installed properly. Check that the ribbon and retransfer film are running smoothly.

⑥ Check print head

If a straight white line(s) travels across the length of your card, the print head may be dirty or defective. If the problem persists after cleaning, please contact your Dascom reseller.

Card bent?

① See Chapter 3 to change from Normal Mode to User Mode.

② Press the ▼ key until LCD prompts [Card Setup]. Then press the **SET Key**.

③ Press the ▼ key until LCD prompts [De-curl Time(s)]. Then press the **SET Key**.

④ Select the 0 -5 seconds flattening time to correct bending card. 0 value represents no flattening.

⑤ Press **SET Key** to save bending correction setting.

The factory default value is “0”.

You may use the driver to configure this parameter as well.

Improper secondary retransfer parameters can overheat and cause card bending as well.
Trying different retransfer conditions may reduce card bending as well.

5.3.2 Clear Jammed Card

Do not turn off the power. The print job will be lost.

Do not attempt to use any tool (screwdriver or sharp object) to remove a jammed card. Sharp objects may damage the rollers and heating rollers. Damages caused by such action

may void the warranty.

To reduce the chance of card jamming:

① See Section 2.1.3 to set the proper card thickness dial

② Use cards with thickness specified in the specifications.

③ Check that cards are not bent.

④ Before putting the cards to the card cassette, shuffle the cards by holding the outside edges to prevent sticking cards.

To take out jammed card

When card jam occurs, the LCD display prompts "Printer Card Jam" and the print job stops. Do not turn off the power as the uncompleted print job will be lost.

① Open the top cover and front cover.

② Take out the card cassette.

③ If the last card is completely fed into the printer, pull it out slowly by hand.

④ Replace jammed card back to the card cassette.

⑤ Close the card feed cover and the printer covers.

⑥ Press the **SET Key**. The error message disappears from the LCD display and the printer restarts.

To take out jammed card in the thermal retransfer unit

When card jam occurs, the LCD display prompts “Feeder Card Jam" and the print job stops. Do not turn off the printer as the uncompleted print job will be lost.

① Open the top cover。

② Take out the card cassette.

③ Rotate the feeding knob in counter-clockwise direction. Take out the jammed card from the cleaning section.

④ Replace jammed card back to the card cassette.

⑤ Close the card feed cover and the printer covers.

⑥ Press the **SET Key**. The error message disappears from the LCD display and the printer restarts.

To take out card jammed in the reverse section

① Open the top cover and front cover.

② Take out the card cassette.

③ Release the lock and lift it up as shown in the diagram.

④ Take out the cleaning roller and cleaning cartridge.

⑤ Rotate the reverse knob. Turn the feeding knob back and forth. The jammed card may come out from the left or right card slot.

⑥ Replace jammed card back to the card cassette.

⑦ Make sure the retransfer film is not shifted by this process. Put flattening part, cleaning roller/cartridge, and card cassette back in place. Close the printer cover.

⑧ Press the **SET Key**. The error message disappears from the LCD display and the printer restarts.

Beware the thermal unit may be hot. Turn off power and let it cool down for a few minutes. If card jam persists, please contact your Dascom reseller.

5.3.3 Change the Print Head

The print head is a heating element and directly affects print quality. A dirty or dusty environment seriously affects its life and can cause damage to the print head.

Consult your Dascom reseller if print head replacement is necessary.

To meet DASCOM's warranty policy for print head replacement, you must:

- Use Dascom approved consumables, including cards, ribbons and service parts.
- Maintain regular cleaning and maintenance of the printer.
- Install the printer in a dust free environment as detailed in the specifications
- Use good well-conditioned cards: clean, without deterioration causing head damage.

5.4 Technical support

If you have trouble configuring and using a printer, read this manual carefully.

If you still can't solve the problem, you can get detailed information and help via the DASCOM partner network.

5.4.1 DASCOM partner network

If you have any problem can't be solved, please contact the DASCOM dealer. If you don't know any DASCOM dealer, please visit www.dascom.com to tell us your problems.

DASCOM will inform you of the detailed contact of your local DASCOM dealer .When you call the DASCOM dealer, you must provide the information as following:

① The printer model and serial number.

② The current configuration and operating system.

③ A description of what happened.

④ A description of the steps taken to address this problem.

In addition, to help answer your questions around the clock, www.dascom.com provides a variety of explanations for the daily use of printers.

5.4.2 More information

If additional technical assistance is required, you can visit DASCOM website www.dascom.com, and find information about the use and troubleshooting of DASCOM printers in the driver and support section.

You can download the latest version of firmware, print driver and use manual, DASCOM printer usage and maintenance related video, and FAQ (FAQ) section.

CHAPTER 6. SPECIFICATION

Function	Double-sided printing (full color)
Printing system	Indirect retransfer system
Printing material	Material: PVC, PET, PET-G
Card thickness	0.48 ～ 1.10mm
Card size	ISO CR-80 – ISO7810 （53.98 x 85.60mm）
Printing density	600dpi （23.6 dots/mm）
Print tones	Input tones: RGB, 256 tones/color, K2 tones Output tones：YMC 256 tones/color，K2 tones +256 tones
Print range	53.98mm x 85.60mm
Print time	144 cards/hour
Ribbon	YMCK, YMCKH, YMCKK, YMCKI, YMCKSI
Film	Clear with optional hologram layer
Card feeding system	Automatic feed from Card Input Feeder Manual feed(single page)
Card feeding capacity	Card Case：250cards 0.76mm Outer Hopper：250cards 0.76mm Reject Box：140cards 0.76mm
Standard interface	USB2.0 Ethernet 100BASE-TX、IEEE802.3u RS-232C x 2(Port for extended users) USB-HUB
Option	RFIDreader-writer、SET-MCW
Supported OS	Windows XP, Windows 7, Windows 8, and Windows 10(32bit and 64bit)
Power source	AC100V~240V, 50/60Hz
Power consumption	heating： 120W(AC90/120V）or 130W（AC220/240V） Printing：60W Power saving mode：15W
Device size	432mm （height）× 338mm （width）× 307mm （deep）
Weight	18.75KG
Operating environment	Temperature：10 ～ 35 ℃ Humidity：20 ～ 80 % (no moisture condensation)
Storage environment	Temperature：-20 ～ 60 ℃ Humidity：0 ～ 90 % (no moisture condensation)

Appendix I: OPTIONS

The following options can be ordered for your printer: non-contact card reader and three in one card reader.

1) Non-contact card reader

When loading or picking up cards, you should turn off the printer.

Open the top cover of the printer, take out the card box and lift up the partition below.

You can see the non-contact card reader as follows:

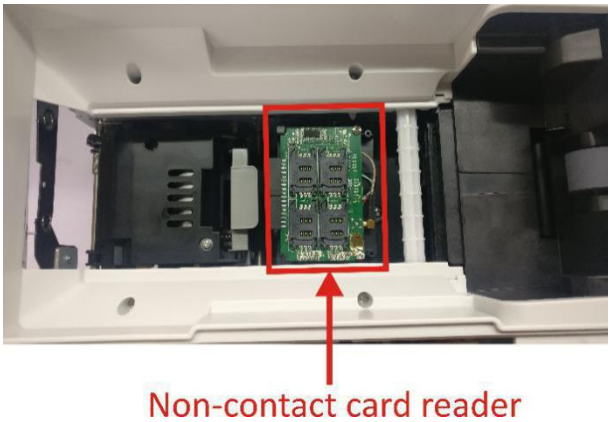

Push the slot cover in the direction indicated by the arrow below. When you hear a click, turn up the slot cover.

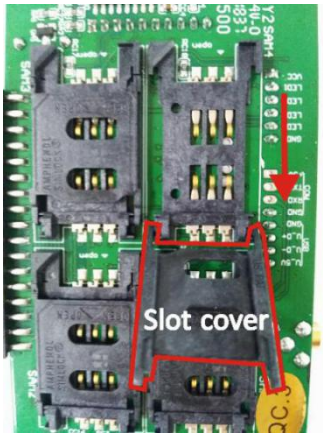

Put the card into the corresponding position of the card slot, close the card slot cover, then push the card slot cover in the direction indicated by the arrow. When you hear a click, the card is installed properly.

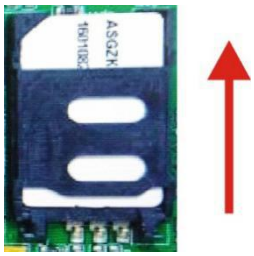

2) Three in one card reader

Since the three in one card reader was installed inside, you have to open the case when you want to load cards or take out cards. Please contact with the after-sales service center, they will help you to handle this.

The position of the card reader is shown as follows：

Push the slot cover in the direction indicated by the arrow below. When you hear a click, you can turn up slot cover.

Put the card into the corresponding position of the slot, close the slot cover, then push the slot cover. When you hear a click, the card is installed properly.

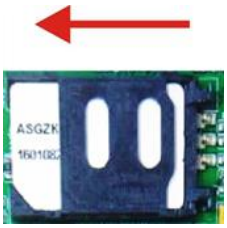

Appendix II: FCC STATEMENT

1. This device complies with Part 15 of the FCC Rules. Operation is subject to the following two conditions:

i. This device may not cause harmful interference.

ii. This device must accept any interference received, including interference that may cause undesired operation.

2. Changes or modifications not expressly approved by the party responsible for compliance could void the user's authority to operate the equipment.

This equipment has been tested and found to comply with the limits for a Class B digital device, pursuant to Part 15 of the FCC Rules. These limits are designed to provide reasonable protection against harmful interference in a residential installation.

This equipment generates uses and can radiate radio frequency energy and, if not installed and used in accordance with Dascom instructions, may cause harmful interference to radio communications. However, there is no guarantee that interference will not occur in a particular installation. If this equipment does cause harmful interference to radio or television reception, which can be determined by turning the equipment off and on, the user is encouraged to try to correct the interference by one or more of the following measures:

- Re-orientate or relocate the receiving antenna.
- Increase the separation between the equipment (printer) and receiver.
- Connect the equipment into an electrical outlet on a circuit different from that to which the receiver is connected.
- Consult your dealer or an experienced radio/TV technicianfor help.

Appendix III: DASCOM REPRESENTATIVES

GERMANY

DASCOM Europe GmbH

Heuweg 3

89079 Ulm

Germany

Tel.: +49 (0) 731 2075 0

Fax: +49 (0) 731 2075 100

www.dascom.com

AMERICAS

DASCOM Americas Corporation

34 Lakeview Court

Verona, VA 24482

USA

Phone:+1 (877) 434 13 77

Fax: +1 (877) 334 0549

www.dascom.com

FRANCE

DASCOM Europe GmbH

117 Avenue Victor Hugo

92100 Boulogne-Billancourt

France

Phone: +33 (1) 73 02 51 98

www.dascom.com

SINGAPORE (ASIA PACIFIC)

DASCOM AP Pte Ltd

21 Bukit Batok Crescent

#29-81, WCEGA Tower

Singapore 658065

Phone: +65 6760 8833

Fax: +65 6760 1066

www.dascom.com

UNITED KINGDOM

DASCOM GB Ltd

Hart House, Priestley Road

Basingstoke, Hampshire

RG24 9PU, England

Phone: +44 (0) 1256 481481

Fax: +44 (0) 1256 481400

www.dascom.com

CHINA

JIANGMEN DASCOM COMPUTER

PERIPHERALS CO., LTD

No. 399, Jinxing Road, Jianghai District,
Jiangmen, Guangdong P.R. China

www.dascom.com

All rights reserved. Translations, reprinting or copying by any means of this manual complete or in part or in any different form requires our explicit approval. We reserve the right to make changes to this manual without notice. All care has been taken to ensure accuracy of information contained in this manual. However, we cannot accept responsibility for any errors or damages resulting from errors or inaccuracies of information herein.

© 2021 DASCOM