POSTEK

RUGGED PARTS, DURABLE MACHINES

User's Manual

TX Series

Barcode Label Printer

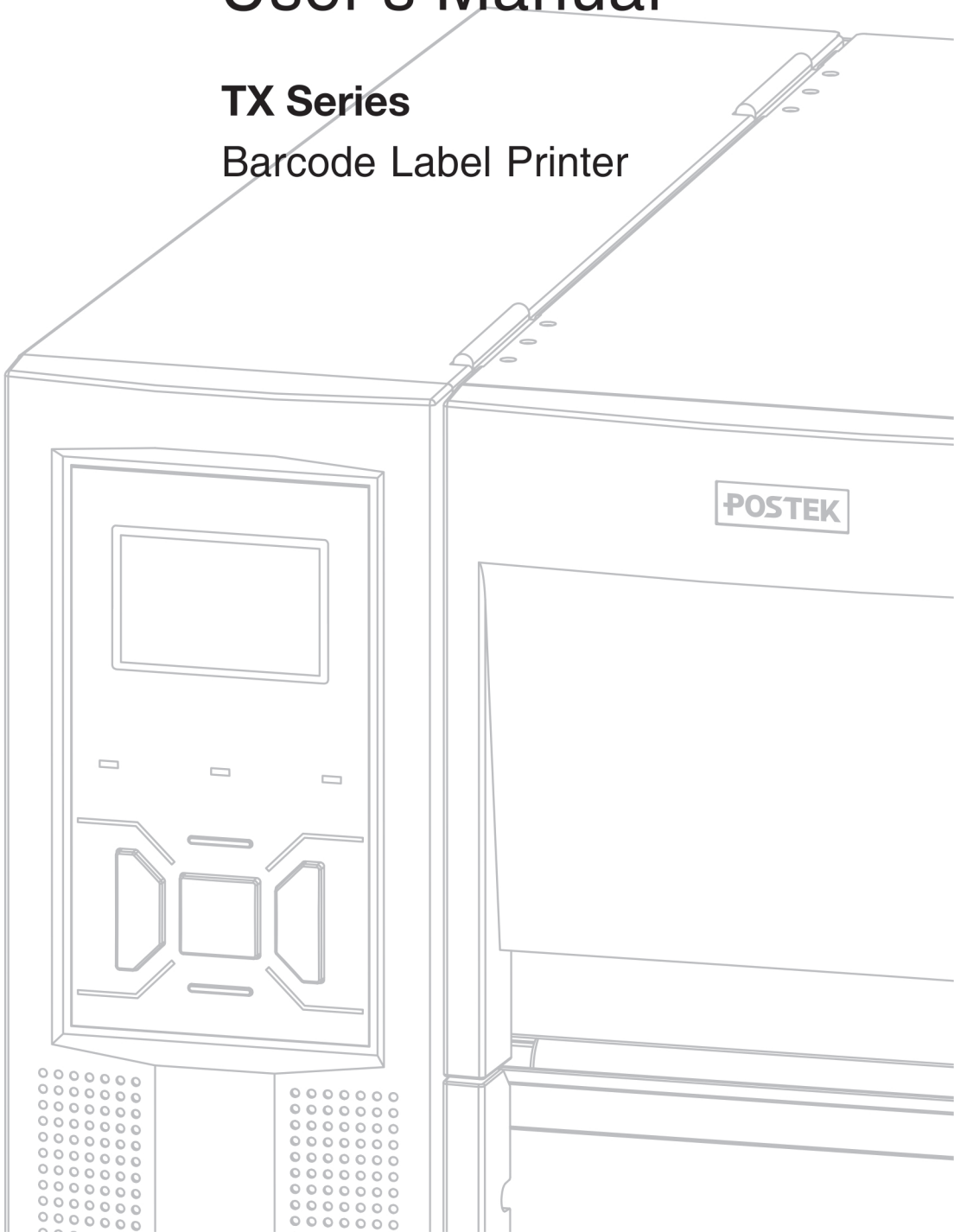

FCC Notice

This device complies with Part 15 of the FCC Rules. Operation is subject to the following two conditions: (1) this device may not cause harmful interference, and (2) this device must accept any interference received, including interference that may cause undesired operation.

This equipment may generate, use and/or radiate radio frequency energy. If not installed and used in full accordance with this User's Manual, interference to radio communications may occur. This equipment complies with the limits for a Class A Information Technology Equipment pursuant to Part 15 of the FCC Rules, which are designed to provide reasonable protection against such interference when operated in a commercial environment. Operation of this equipment in a residential area may also cause interference. In such case the user, at his/her expense, will be required to correct the interference using whatever means necessary.

Trademarks

POSTEK is a registered trademark by POSTEK Electronics Co., Ltd.
ARM is a registered trademark of Advanced RISC Machines Ltd.
Microsoft, Windows are registered trademarks of Microsoft Corporation.

Copyright

© 2021 by Postek Electronics Co., Ltd. All rights reserved. Under the copyright laws, this manual cannot be reproduced in any form without the prior written permission of POSTEK. No patent liability is assumed, with respect to the use of the information contained herein.

Disclaimer

POSTEK barcode/RFID printers are developed and produced by Postek Electronics Co., Ltd (hereinafter as "POSTEK") with the adoption of direct thermal/thermal transfer printing and RFID encoding techniques. For thermal transfer printing, matching ribbons and media are required. Meanwhile, the wide variety of RFID chip and antenna designs make it difficult to guarantee RFID tag's 100% compatibility with POSTEK printers, to satisfy your printing needs, please consult with the local reseller(s) to choose the matching consumables for POSTEK printers.

This manual has been validated and reviewed for accuracy. The instructions and descriptions it contains are accurate for the POSTEK printer at the time of this manual's distribution. However, succeeding printers and manuals are subject to change without notice. POSTEK assumes no liability for damages incurred directly or indirectly from errors, omissions or discrepancies between the printer and this manual.

To protect your interest, and to prevent loss due to improper handling, please read the corresponding user's manual before operation, and don't use the printer during abnormal conditions. In no event shall POSTEK be liable for any damage or loss caused by human misoperation, including but not limited to loss of business profits, business interruption, loss of business information, or other pecuniary loss.

Although this manual describes and details many issues which could possibly occur, the manufacturer cannot warrant against unpredictable conditions during the printer's application. For problems such as the printer not working, missed or unclear print content, etc., POSTEK and/or its resellers are

responsible for troubleshooting (according to POSTEK Warranty Clauses). In no event shall POSTEK or the resellers involved be liable for any direct or indirect loss, including but not limited to loss of business profits, business interruption, loss of business information, or other pecuniary loss.

Important Safety Instructions

- Only qualified and trained service technicians should attempt to repair the printer.
- Do not place the printer on or near a heat source.
- Be sure that your power source matches the rating listed on the regulatory label on the back of the printer. Be certain your power source is grounded.
- To avoid getting an electric shock, do not use a worn or damaged power cord. If the power cord becomes damaged or frayed, replace it immediately.
- Do not insert anything into the ventilation slots or openings on the printer.
- The printer should never be operated in a location where it can get wet. Personal injury may result.
- The printhead becomes hot while printing. To protect from damaging the printhead and risk of personal injury, avoid touching the printhead.
- To get increased printhead longevity and higher quality printouts, always use approved labels, tags and thermal transfer ribbons. Approved supplies can be ordered from your Postek authorized reseller.
- Static electricity that accumulates on the surface of the human body or other surfaces can damage or destroy the printhead or electronic components in this device. DO NOT touch the printhead or the electronic components with bare hands.
- Place the printer on a flat, firm, solid surface.
- Never operate in a high temperature environment.
- Turn off the power when not in use for extended periods.
- Follow all recommendations and setup instructions included in this manual.

Contents

Preface 1

Important Notes 2

Chapter 1: Introduction 4

1.1 Specifications 4
1.2 Contents in the Box 5

Chapter 2: Setup and Use 6

2.1 Main Parts and Structures 6
2.1.1 Front View 6
2.1.2 Internal View 7
2.1.3 Rear View 9
2.1.4 Loading Path 10
2.2 Setting up the Printer 11
2.2.1 Interface Connection 11
2.2.2 Connecting the Printer 11
2.2.3 Loading the Ribbon 11
2.2.4 Loading the Media 15

Chapter 3: Operations and Settings 19

3.1 Basic Operations 19
3.1.1 Power Switch 19
3.1.2 The Front Panel 19
3.1.3 Advanced Functions 21
3.1.4 Setting Menu 22
3.1.5 Setting Operation Mode 26
3.2 Adjusting the Printhead Pressure and Balance 29
3.3 Adjusting the Ribbon Spindle Tension 30
3.4 Installing Windows Driver and Label Editing Software 31

Chapter 4: Maintenance 32

4.1 Cleaning the Printhead 32
4.2 Cleaning the Platen Roller 32
4.3 Cleaning the Printer Interior 32
4.4 Cleaning the Sensors 33

Chapter 5: Troubleshooting 34

5.1 LCD Error Messages 34
5.2 LED Error Indications 35
5.3 Miscellaneous Issues 36

Appendix A: Interface Specifications 37

Appendix B: ASCII Table 38

Preface

Your POSTEK TX Series high performance industrial barcode label printer features innovative state-of-the-art technology and superior quality workmanship. Boasting an all metal frame and unique core construction, the TX achieves a sturdy and durable stationary platform for smooth printing. A powerful control system can easily handle the most complicated printing requirements, and advanced thermal transfer/direct thermal technology offers optimum printout clarity.

This manual explains how to set up and begin using your TX Series printer. It also provides detailed information on configuring your printer, basic operations, care and troubleshooting.

Please read this manual carefully before using the POSTEK TX Series printer.

Symbol Conventions

The symbols that may be found in this document are defined as follows.

Symbol	Description
WARNING	Alerts you to a medium or low risk hazard that could, if not avoided, result in moderate or minor injury.
CAUTION	Alerts you to a potentially hazardous situation that could, if not avoided, result in equipment damage, data loss, performance deterioration, or unanticipated results.
NOTE	Provides additional information to emphasize or supplement important points in the main text.

Version

Version 1.2, published in August, 2021.

Important Notes

Please read the following passages thoroughly before proceeding.

Printhead

The thermal printhead can be easily damaged due to its precision construction. A printhead damaged by misuse is not covered under the terms of the warranty. To ensure longevity of the printhead, please note the following:

- DO NOT scrape or use tools that might damage the printhead surface.
- To protect from corroding the printhead, DO NOT touch the printhead with bare hands.
- DO NOT use thermal paper or thermal transfer ribbons which contain Na, K or Cl elements.
- Keep printhead from any form of liquid or dampness.
- Only use a cotton swab dipped in anhydrous isopropyl alcohol to clean the printhead.
- Always use high-quality consumables:
  - When the printhead module is closed, pressure is placed directly onto the printhead; dirt such as paper scraps, sand, dust and glue can scrape or damage the printhead.
  - The printhead is also easily damaged by static electricity, which may be generated by poor quality ribbons.
- Always inspect consumables for high quality before purchasing.

CAUTION

The TX Series printer functions under Direct Thermal or Thermal Transfer print modes. Thermal Transfer is set as the factory default (requires ribbon for printing). However, if you need to print on Direct Thermal materials (ribbon is not required), please contact your printer supplier or service provider to reduce the printhead pressure. This can protect your printhead from early performance deterioration due to direct contact with the thermal media. Any physical printhead damage caused by direct thermal printing is not covered under warranty.

Cutter (Optional)

The printer equipped with a cutter can automatically cut the label after printing. However, automatic cutters pose a safety hazard since the blades are very sharp. To prevent injuries and cutter failures while using one of the many types of automatic cutters, please follow the safety and maintenance rules listed below:

- Before using the cutter, be sure you have been trained by a qualified individual. A written procedure covering the cutter's use is recommended.
- It is very important to choose the right cutter model for the application to ensure personal safety and prevent damage to the cutter caused by cutting wrong types of media.
- Keep loose items such as long hair, clothing, jewelry, away from the cutter.
- Don't put anything except print media inside the cutter.
- Turn off power of printer if you notice abnormality with the cutting process and alert a qualified technician to resolve the issue.
- Never cut a print media which exceeds the maximum operating conditions of the cutter.

- Not every cutter model is designed to be able to cut through adhesive. Use only the dedicated cutters to cut through adhesive materials. Even so, regular cleaning is required to remove the adhesive built up on the blades over time to prevent cutter jam.
- Routine inspection and maintenance are required to be performed by a qualified technician to keep the cutter in good working conditions.

Chapter 1: Introduction

1.1 Specifications

Model by Resolution	203DPI	300DPI	600DPI
Printing Mode	Direct Thermal and Thermal Transfer		
Max Printing Speed	10 ips (254 mm/s)	8 ips (203.2 mm/s)	6 ips (152.4 mm/s)
Max Printing Width	4.09″ (104 mm)	4.17″ (106 mm)	4.16″ (105.6 mm)
Max Printing Length	157″ (4000 mm)	79″ (2000 mm)	19.6″ (500 mm)
HEAT™ Level	II	I	I
Memory	64 MB FLASH ROM, 16 MB SDRAM		
Media	Width: 4.56″ (116 mm) max, 0.39" (10 mm) min. OD: 7.3″ (186 mm) max. ID: 3" (76.2mm) min, as standard; 1.5 (38 mm) min., is factory dependent		
Media Thickness	0.0024″ ~ 0.012″ (0.06 ~ 0.3 mm), including liner		
Ribbon	Width: 4.65″ (118 mm) max. Length: 1968' (600 m) max. OD: 3.3″ (84 mm) max. ID: 1″ (25.4 mm) min. Ink side: both In and Out		
Media Sensor	Upper&Lower Reflective (Adjustable) / Transmissive (Adjustable)		
Fonts	Five built-in dot matrix ASCII fonts, user-downloadable TrueType Fonts		
Barcode Types	1D Barcode: Code 39, Code 93, Code 128/subset A,B,C, Codabar, Interleave 2 of 5, UPC A/E 2 and 5 add-on, EAN-13/8/128, UCC-128, etc. 2D Barcode: MaxiCode, PDF417, Data Matrix, QR Code, etc.		
Interfaces	RS-232 Serial, 10/100 M Adaptive Ethernet, USB DEVICE 2.0, USB HOST, Centronics Parallel		
LCD display	Graphic Dot Matrix		
Power Source	100 ~ 240 V, 50/60 Hz, 3.5 A		
Weight	33.06 lbs (15 kgs)		
Dimensions	W 11.3″ (286 mm) x D 17.6″ (448 mm) x H 10.7″ (271 mm)		
Operating Environment	Temperature: 32° F ~ +104° F (0° C ~ 40° C) Relative humidity: 5% - 85% non condensing		
Storage environment	Temperature: -40° F ~ +140° F (-40° C ~ 60° C) Relative humidity: 5% - 85% non condensing		
Optional Items	Rotary Cutter, External Label Rewinder		

HEAT™, or Heating Equilibrium Adaptive Tuning, is a POSTEK designed and developed cutting-edge technology that sets the benchmark for heat management in thermal printing. Printers equipped with HEAT™ have significant improvements in their printout clarity and print speed. The HEAT™ level represents the fineness of the heating uniformity with level I being the finest.

1.2 Contents in the Box

Inspect the shipping carton(s) for possible shipping damage, if damage is discovered, notify the shipping company to report the nature and extent of the damage.

Please check the items according to the Quick Start Guide. If there are any items missing, notify your authorized reseller.

Chapter 2: Setup and Use

2.1 Main Parts and Structures

2.1.1 Front View

Figure 2-1 shows the front view of the TX Series printer.

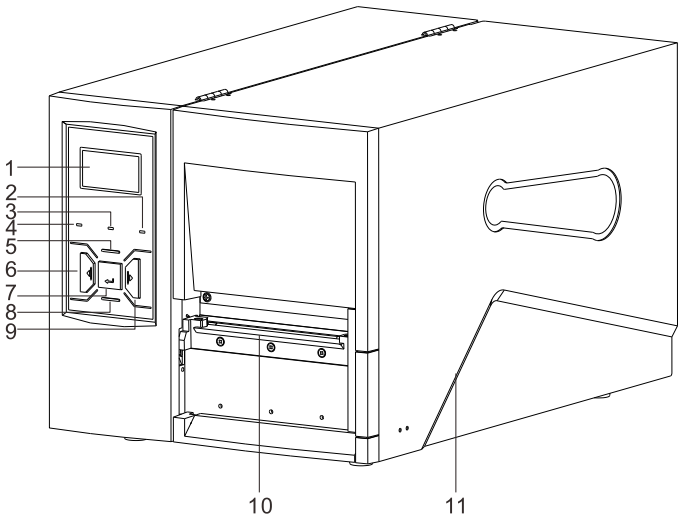

Figure 2-1 Front View

Table 2-1 Front View Description

Number	Description
1	LCD Screen
2	[RIBBON]Indicator
3	[MEDIA]Indicator
4	[READY]Indicator
5	[MEDIA CALIBRATION] Button
6	[PAUSE]Button
7	[FEED]Button
8	[MENU] Button
9	[CANCEL]Button
10	Tear-off Bar
11	Right Cover

2.1.2 Internal View

Figure 2-2 (a) and (b) show the internal views of two TX printers with different media supply mechanism. In (a), all media rolls with media core diameter greater than 1.5″ (38 mm) can be fitted in; whereas in (b), only 3" (76.2mm) media core diameter is acceptable. In (b), a damping torque is applied to the Media Spindle to provide tension to the media when feeding.

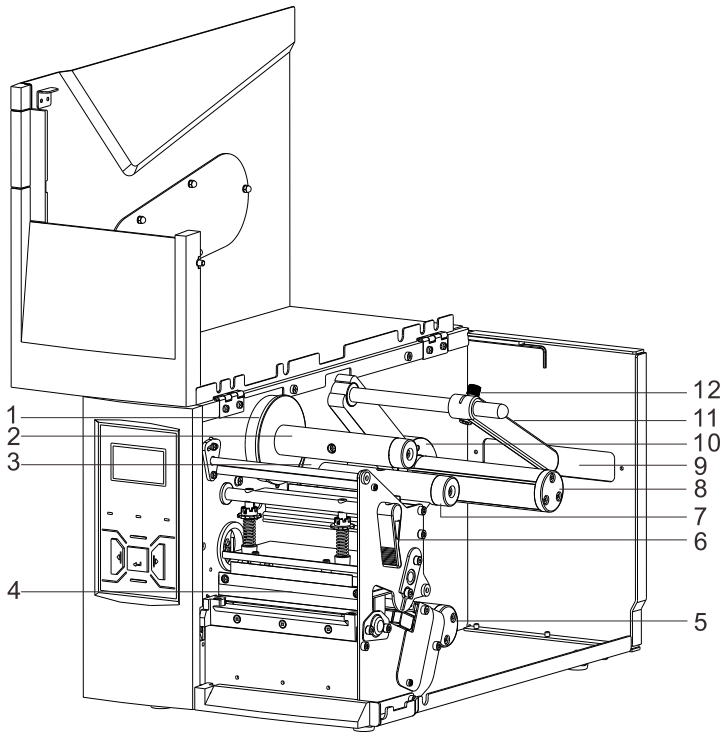

(a) Media Roll Baffle Arm Mechanism

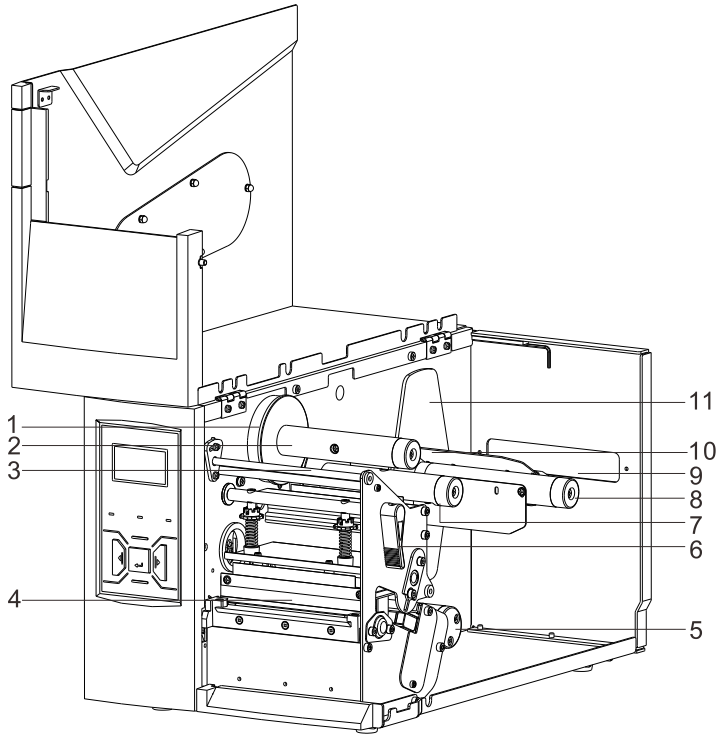

(b) Media Core Supporting Blade Mechanism

Figure 2-2 Internal View

Table 2-2 Internal View Description

(a) Media Roll Baffle Arm Mechanism

Number	Description
1	Stop Plate_Ribbon Take-up
2	Ribbon Take-up Spindle
3	Stop Plate_Ribbon supply
4	Printhead Assembly
5	Media Spindle
6	Lever
7	Ribbon Supply Spindle
8	Media Roll Guide
9	External Media Loading Slot
10	Stop Plate_Media supply
11	Media Roll Baffle Arm
12	Bolt

(b) Media Core Supporting Blade Mechanism

Number	Description
1	Stop Plate_Ribbon Take-up
2	Ribbon Take-up Spindle
3	Stop Plate_Ribbon supply
4	Printhead Assembly
5	Media Spindle
6	Lever
7	Ribbon Supply Spindle
8	Media Roll Guide
9	External Media Loading Slot
10	Media Core Supporting Blade
11	Stop Plate_Media supply

2.1.3 Rear View

The TX Series printer is equipped with multiple interfaces. See Figure 2-3.

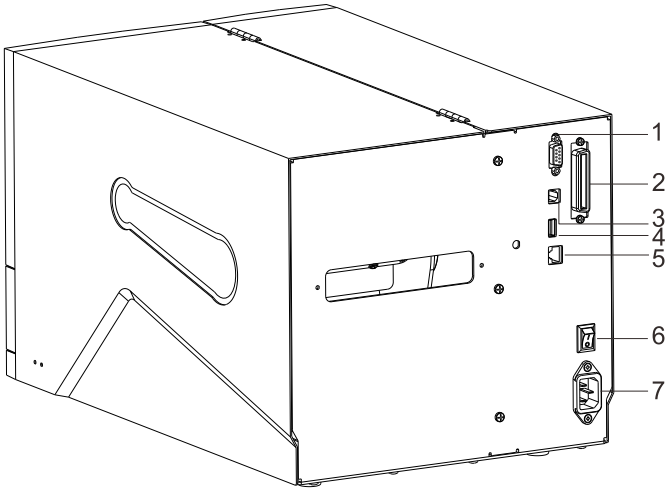

Figure 2-3 Rear View

Table 2-3 Rear View Description

Number	Description
1	RS-232 Serial Port
2	Centronics Parallel Port
3	USB Device
4	USB Host
5	Ethernet Port
6	Power Switch
7	AC In Port

2.1.4 Loading Path

Figure 2-4 (a) and (b) show the consumables' loading paths in the TX Series printer.

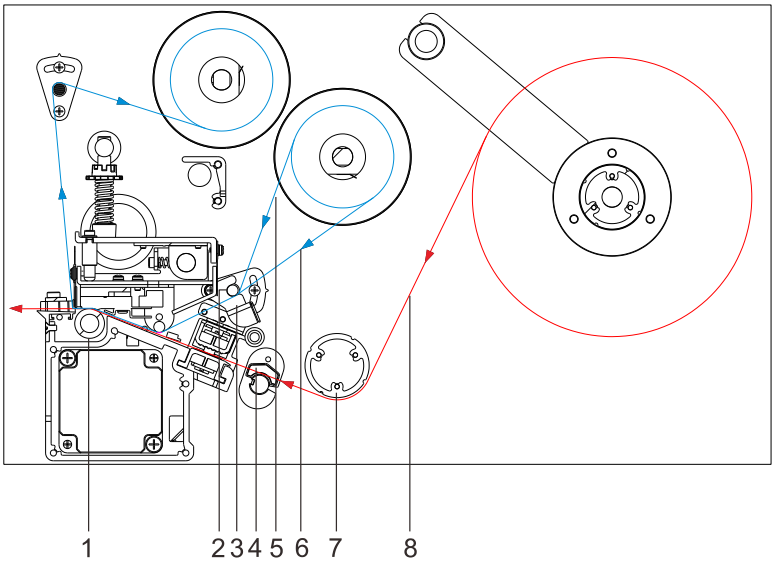

(a) Loading Paths, Media Roll Baffle Arm Mechanism

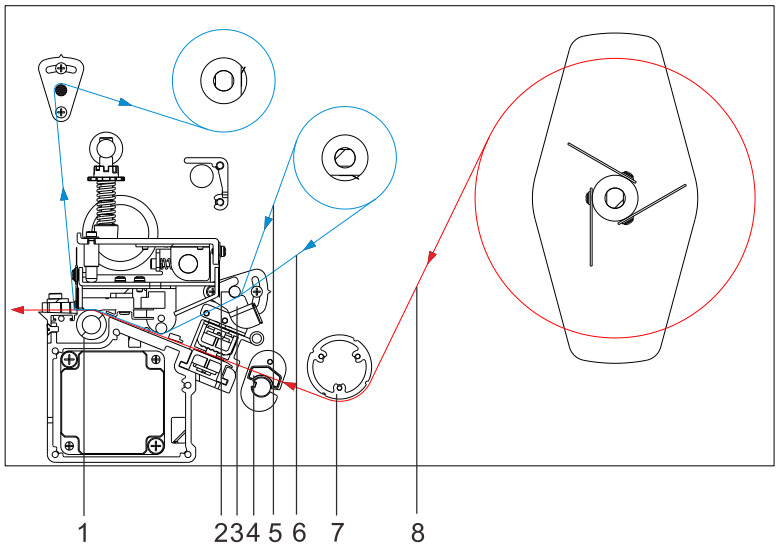

(b) Loading Path, Media Core Supporting Blade Mechanism

Figure 2-4 Loading Paths

Table 2-4 Loading Path Description

Number	Description
1	Platen Roller
2	Ribbon End Sensor
3	Ribbon Guide Rod
4	Media Guide Slide
5	Ribbon Path (Ribbon-ink side in)
6	Ribbon Path (Ribbon-ink side out)
7	Media Guide Rod
8	Media Path

2.2 Setting up the Printer

2.2.1 Interface Connection

The TX series printer supports RS-232 Serial, Centronics Parallel, USB DEVICE and 10/100M Adaptive Ethernet interface connections.

To connect:

- Make sure the printer is powered OFF.
- The printer will identify the communication port automatically.
- The default values of printer port can be obtained from the self-test report. (See 3.1.3 Advanced Functions/Obtaining Printer Configuration Information)
- Cable configurations for Serial (RS-232C) interface can be found in Appendix A: Interface Specifications of this guide.
- Please take the following measures to reduce cable noise.
  - Restrict the length of the interface cable to less than 6' (1.83 M) if possible.
  - Keep the interface cable separate from power cords.

2.2.2 Connecting the Printer

WARNING

- *Do not use the printer near liquids or corrosive chemicals.*
- *Connecting to a wrong power source may cause damage to your printer. POSTEK assumes no liability for any damage in such cases. The rating for the printer is 110/240 VAC ±10%, 50/60 Hz.*

1. Make sure the printer is switched OFF.
2. Connect the power cord to the AC In Port on the back of the printer.
3. Plug the power cord into a live wall outlet.

2.2.3 Loading the Ribbon

CAUTION

Load ribbon only when using the thermal transfer printing mode. Remove any ribbon that may be loaded when using the direct thermal printing mode.

To load ribbon, refer to Figure 2-5 through Figure 2-10 (only Media Core Supporting Blade mechanism is illustrated), and follow the steps below:

1. Lift to open the right cover of the printer.
2. Turn the Lever counter clockwise to open the Printhead. See Figure 2-5.

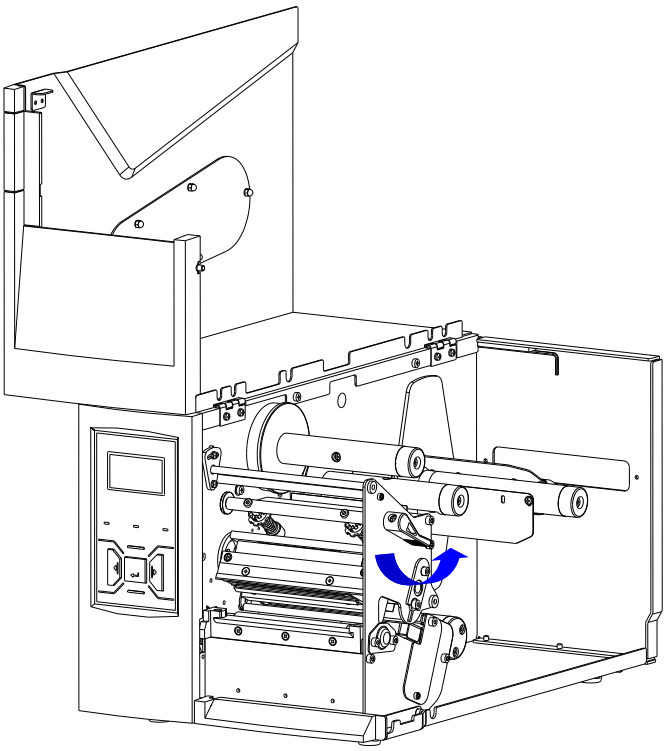

Figure 2-5 Open the Printhead

3. Stick a label to the outside/ inside of the ribbon to check which side the ink is on. See Figure 2-6.

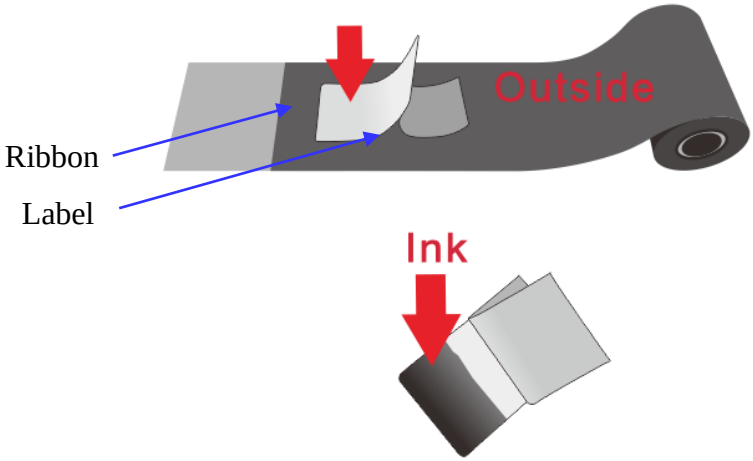

Figure 2-6 Check Ink Side

4. Place the ribbon roll on the Ribbon Supply Spindle, see Figure 2-7. Make sure that the ribbon roll is firmly pushed against the Stop Plate.

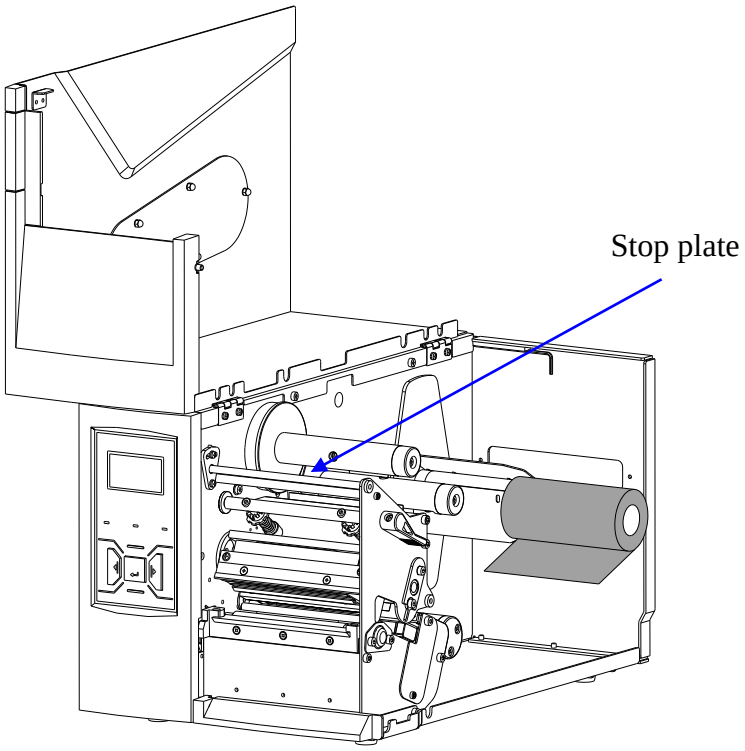

Figure 2-7 Load Ribbon Roll

5. Follow the ribbon path indicated in Figure 2-4, thread the ribbon under the Ribbon Guide Rod and pass the Printhead Assembly, make sure that the ribbon's ink side is facing the media. See Figure 2-8.

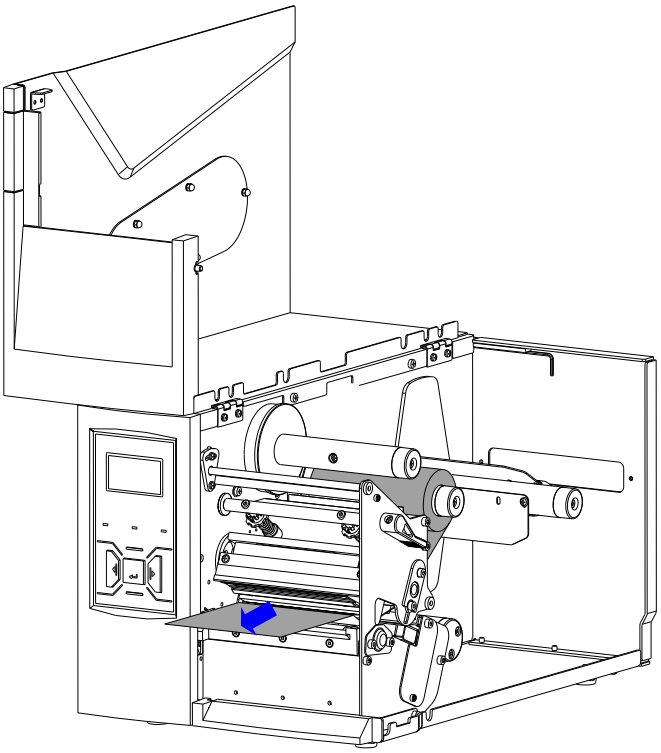

Figure 2-8 Thread Ribbon Through Printhead Assembly

6. Wrap the ribbon around a spare ribbon core to form a Ribbon Take-up Roll. See Figure 2-9.

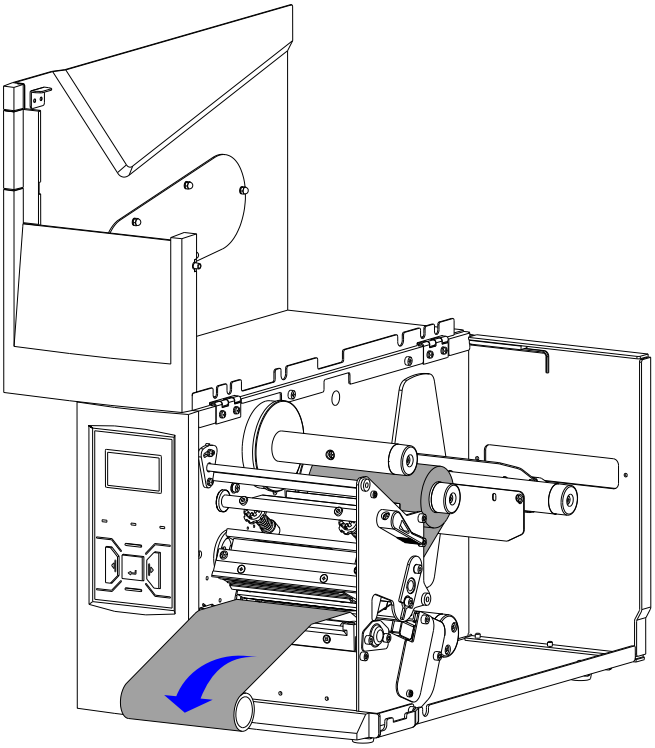

Figure 2-9 Ribbon Take-up Roll

7. Slide the Ribbon Take-up Roll on the Ribbon Take-up Spindle and push it firmly against the Stop Plate. Turn the Take-up Spindle until the ribbon is tightly wound. See Figure 2-10.

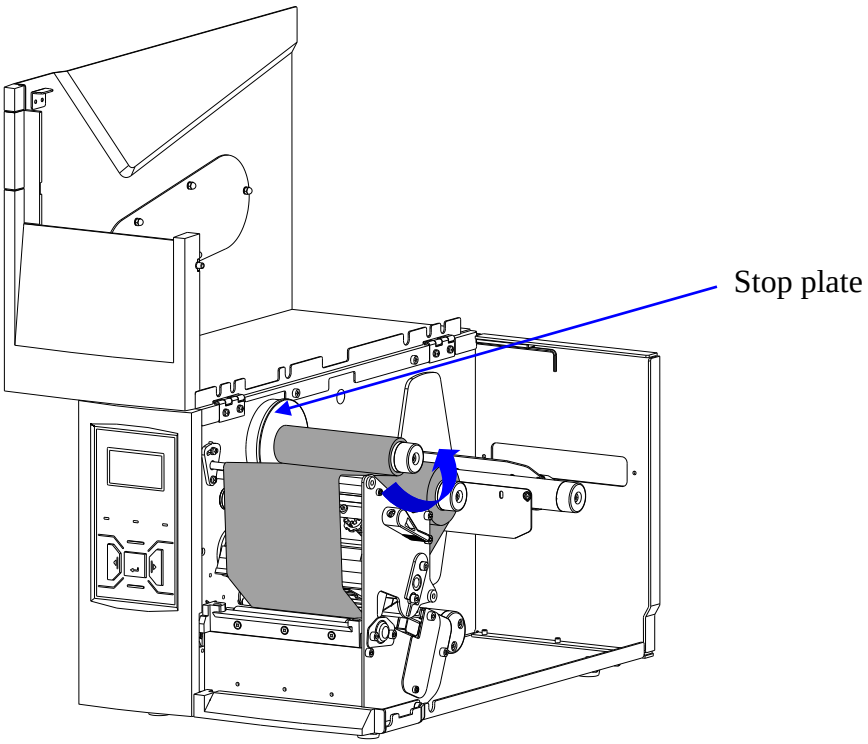

Figure 2-10 Ribbon Loaded

NOTE

To make sure the Ribbon End Sensor works properly, please use ribbon rolls which end with reflective materials or transparent materials with good reflective performance.

2.2.4 Loading the Media

TX Series printers can be operated under four different modes: Standard Mode, Tear-off Mode, Cutter Mode, and Peeler Mode.

- In Standard Mode, the printer stops and goes into standby as soon as the print job is complete.
- In Tear-off Mode, after the print job is finished, the printer will feed the label until the edge of it aligns with the edge of the Tear-off Bar allowing easy tear off for the user.
- In Cutter Mode, the printer stops and cuts the printed label(s) (Only available on models with cutter installed).
- In Peeler Mode, printer stops and waits for the printed and peeled off label to be taken away before resuming the print job (Only available on models with peeler installed).

Standard Mode

To load media into the TX Series printers while under Standard Mode, follow the steps below:

1. Lift to open the right cover.
2. In the case of using the media roll Baffle Arm mechanism, as shown in Figure 2-11(a). Loosen the Bolt, then lift the Baffle Arm, load a media roll onto the Media Spindle. Adjust the Baffle Arm by pushing it slightly against the outside edge of the media roll, make sure the Stop Plate and Baffle Arm touch, but do not restrict, the inside and outside edges of the media roll respectively. Tighten the Bolt to lock the Baffle Arm in place.
   In the case of the media core Supporting Blade mechanism, as shown in Figure 2-11(b). Place the media roll on the Media Spindle, pushing it firmly against the Stop Plate.

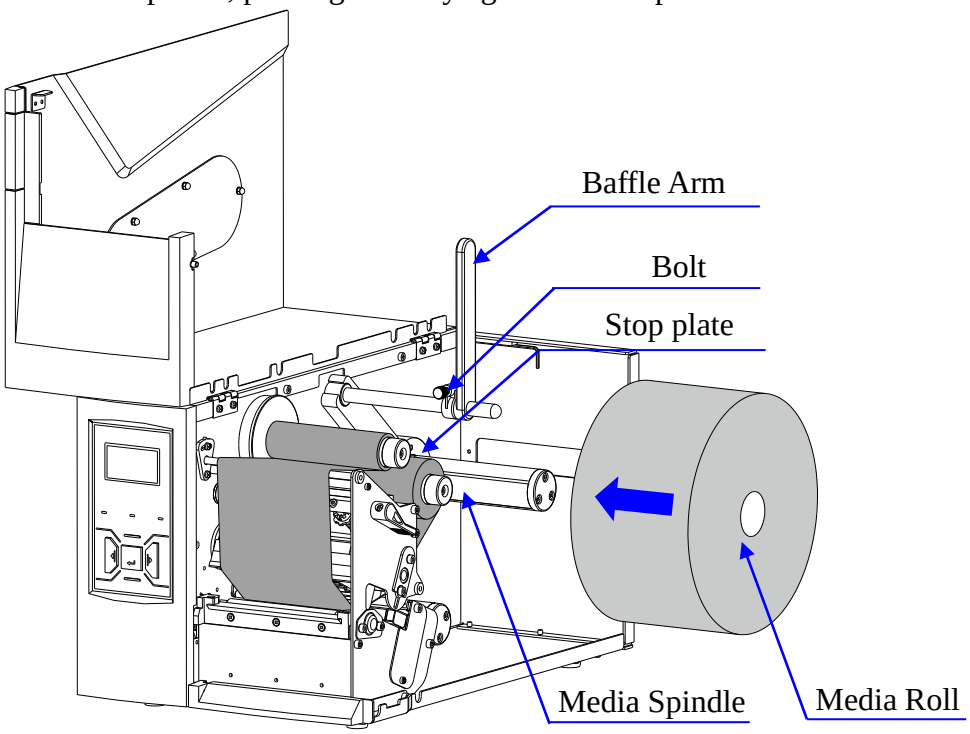

(a) Roll Media Loading with Baffle Arm Mechanism

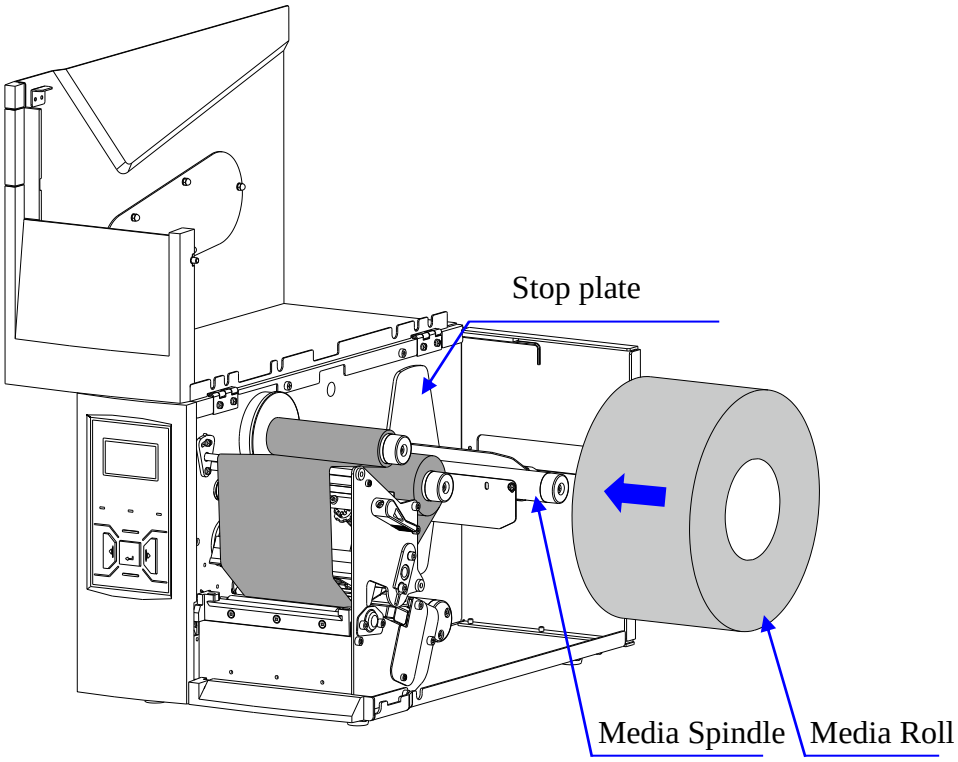

(b) Roll Media Loading with Media Core Supporting Blade Mechanism

Figure 2-11 Roll Media Loading

3. Thread the media along the Media Path as shown in Figure 2-4 (a) and (b), Loaded media is shown in Figure 2-12 (a) and (b).

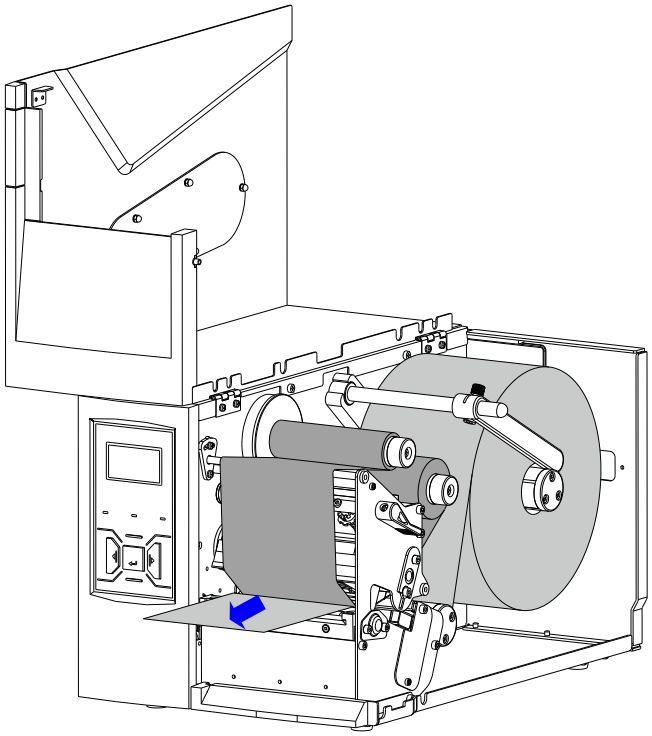

(a) Media Loaded, Baffle Arm Mechanism

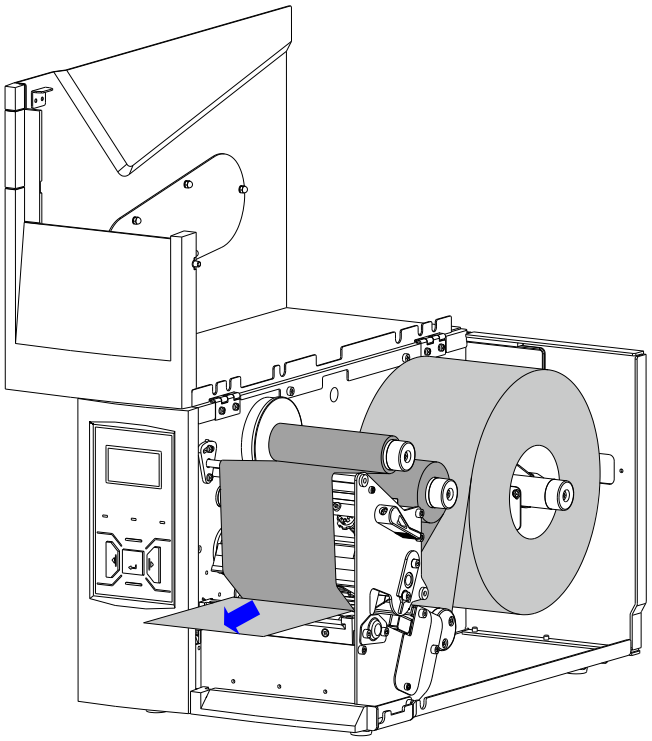

(b) Media Loaded, Core Supporting Blade Mechanism

Figure 2-12 Media Loaded

4. Adjust the Media Sensor Position. Loosen the Media Sensor Bolt and move the Media Sensor to the appropriate position, see Figure 2-13. Adjust the Media Sensor to ensure that its position is directly over the gap, hole, notch or black mark.

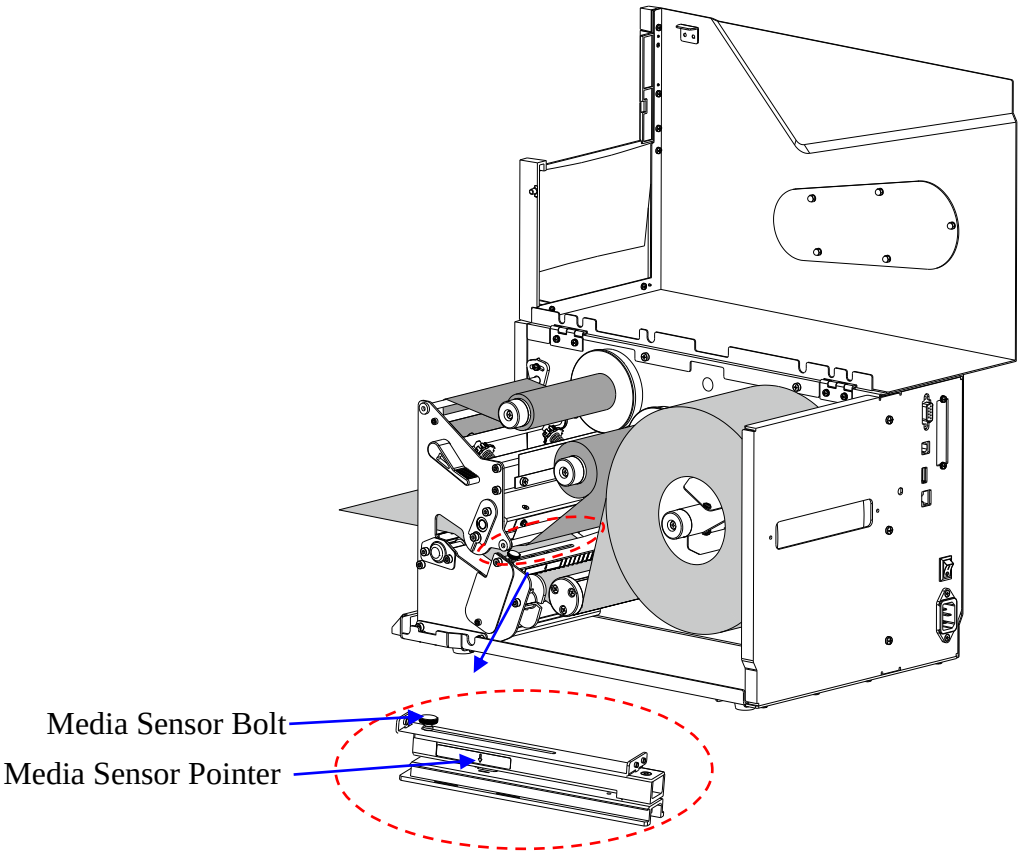

Figure 2-13 Adjust the Media Sensor Position

NOTE

- *The TX Series printer has three types of media sensors:*
  - *Transmissive sensor, detects gap, hole or notch between labels;*
  - *Lower reflective sensor, detects black mark on the backside of the media;*
  - *Upper reflective sensor, detects black mark on the front side of the media.*

  The way to set the sensor type can be found in Section 3.1.4 Setting Menu.
- *When roll media is produced, the media end would be fixed on the media core by duct tape or scotch tape. If your printer cannot detect Media Out signal well, please refer to Figure 2-14 to check the position of the tape.*

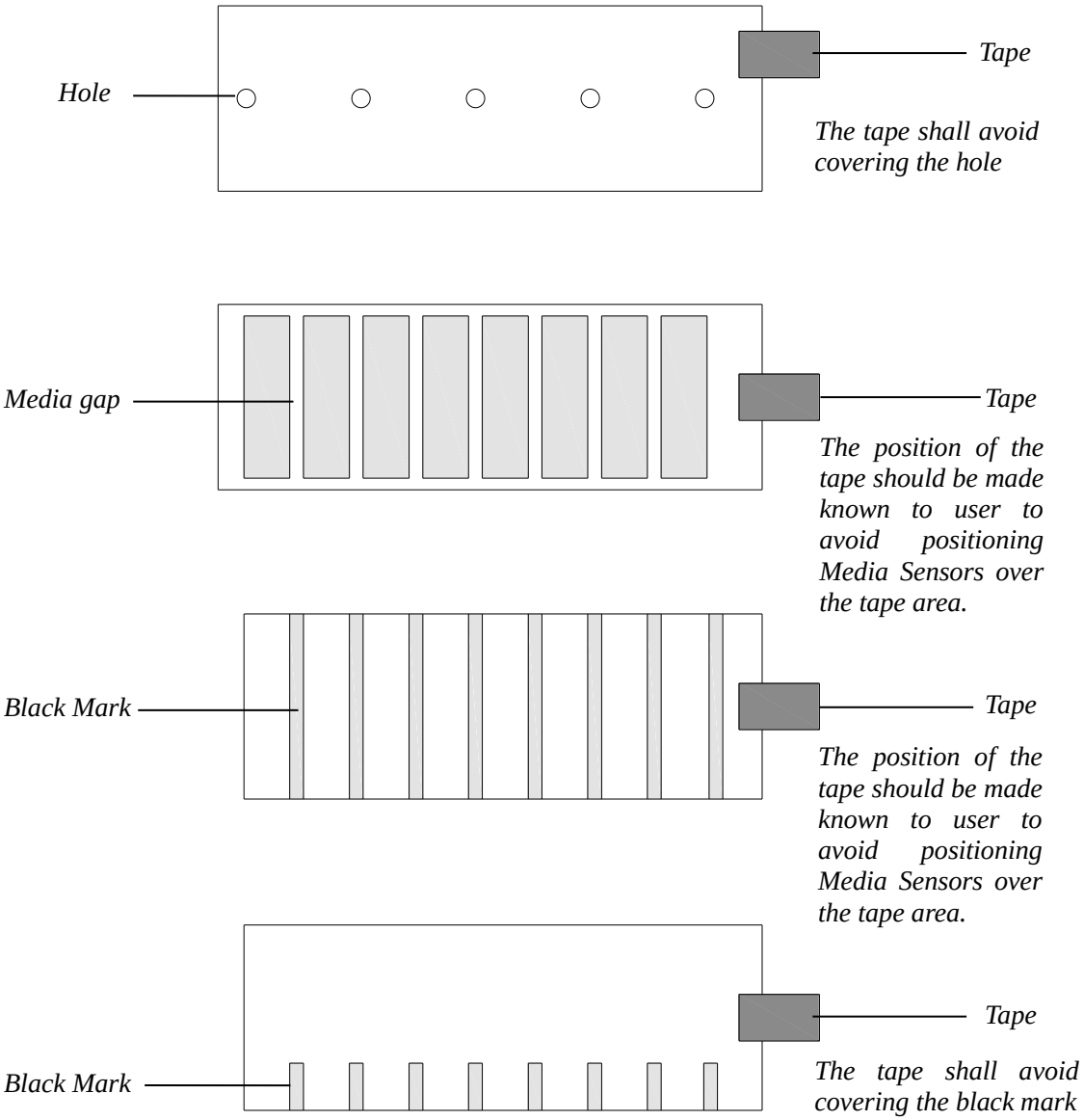

Figure 2-14 End-fixing Tape Position

5. Move the Media Guide Slide to touch the edge of the media, making sure not to pinch or squeeze the media; keep the media flat and smooth.
6. Turn the Lever clockwise to lock the Printhead in place.
7. Turn on the printer and press the [MEDIA CALIBRATION] button, the printer will automatically feed labels and the media calibration is done.

NOTE

Calibration must be made when media is loaded to the printer for the first time, or when there is a change to a different type of media.

Chapter 3: Operations and Settings

3.1 Basic Operations

3.1.1 Power Switch

The power switch is on the back panel of the printer. The symbols on the switch are defined as follows:
— - ON
○ - OFF

3.1.2 The Front Panel

The Front Panel of the TX printer consists of:

- Three LED Indicators: [MEDIA], [READY] and [RIBBON]
- Five multi-function buttons: [PAUSE], [FEED], [CANCEL], [MEDIA CALIBRATION] and [MENU]
- A graphic dot matrix LCD display

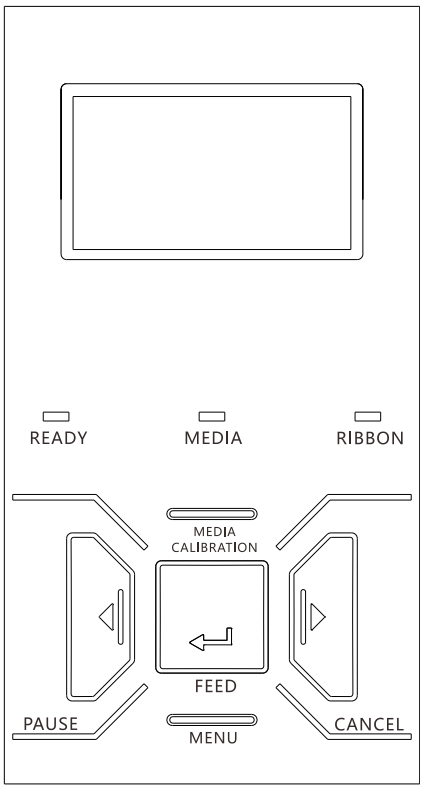

Figure 3-1 Front Panel

LED Indicators

The LED indicator on the front of the printer shows the different states that the printer is in, please refer to Table 3-1 below for details.

Table 3-1 LED Indicator Description

LED Indicator	Description
[READY]	• If the indicator is on, the printer is ready and waiting for user input. • If only the [READY] indicator is blinking, then the printer is paused and awaiting further instruction.
[MEDIA]	• If the indicator is on, it means the printer is at a normal working state. • If both the [READY] and [MEDIA] indicators are blinking, then the printer detected media out.
[RIBBON]	• If the indicator is on, it means the printer is using thermal transfer mode (Requires ribbon). • If the indicator is off, it means the printer is using direct thermal mode (No ribbon required). • If both [READY] and [RIBBON] indicators are blinking, then the printer detected ribbon out.

Panel Buttons

The five buttons have different functions based on the mode of the operation is performed, please refer to Table 3-2 for details.

Table 3-2 Panel Button Description

Mode	Function
[FEED]	• When printer is in a standby state, press once and the printer would feed one label. • When printer is in an error state, press to choose Reprint or Print Next.
[PAUSE]	• When printer is in working or standby state, press once to pause the printer. • When printer is in pause state, press once to resume.
[CANCEL]	• During printing, press to cancel the current print job. • When printer is in an error state, and there is no print job in process, press to clear the error report. • When printer is in an error state, and there is unfinished print job in process, press to cancel the print job.
[MEDIA CALIBRATION]	Performs media sensor calibration
[MENU]	Enter/exit setup menu

LCD Panel Operation

The LCD can display the printer's status, total print quantities, error messages, and is also valuable when configuring the printer. Table 3-3 are common examples of LCD displays.

Table 3-3 Menu Example Description

Main Menu	Description
READY [203DPI] TOTAL: 888 VERSION: 1.76 2016-01-01 08:08:08	Ready Status [Resolution] Total printed labels count, it will be reset to 0 if cycle the printer power. Firmware Version Current Date Current Time

Main Menu	Description
PAUSE 100/888 2016-01-01 08:08:08	Printing Pause Status Remaining labels (pages) count of the current job / Total labels (pages) qty of the current job, it will be reset to 0 if cycle the printer power. Current Date Current Time
◄ XXXX ► 01/40	Setting the main menu The first row shows the variable selected. 01/40 indicates a total of 40 settings with the 1st item now selected.
XXXX 12	Setting an item The first row shows the variable selected. Some items include a progress bar. 12 indicates the current setting value of 12.

3.1.3 Advanced Functions

Media Calibration

When the printer is on standby, press the [MEDIA CALIBRATION] button, the printer will automatically feed labels and the media calibration is done. During this process, all three indicators will start blinking. When all three indicators stop blinking and return to a steady state, the media calibration is complete.

NOTE

- *When it is the first time installing the media or when changing to a different type of media, media calibration must be performed.*
- *No calibration is needed when using continuous media.*

Obtaining Printer Configuration Information

When the printer is on standby, press and hold the [PAUSE] button (hold for around 4 seconds), all three indicators will blink once and then return to a steady state, the printer will print a self-test page with detailed information regarding the printer's configuration then return to standby.

The information includes: The printer's model, firmware version, hardware's parameters and its current status, thermal transfer/direct thermal mode, font list, etc.

Reset to Factory Settings

When the printer is on standby, press and hold the [CANCEL] button (hold for around 4 seconds), all three indicators will start blinking (if no further input is detected for the next 8 seconds then the printer will return to standby). Release the [CANCEL] button and press it again to initiate the reset process, the [READY] indicator would be off and the rest two indicators would blink simultaneously, when all three indicators are lit and return to a steady state, the reset process is complete.

NOTE

The number of printed labels (pcs) and printed length (m) cannot be restored to factory default value.

3.1.4 Setting Menu

Button functions

Table 3-4 Button Function Description

Button	Function	Description
[MENU]	Enter/exit	Enter/exit setup mode
[PAUSE]	Item/Parameter Selection	Descending Item/Parameter selection
[CANCEL]	Item/Parameter Selection	Increasing Item/Parameter selection
[FEED]	Confirmation	Confirm selection
[PAUSE]+ [FEED]	Enter setup mode while printing	Press PAUSE to pause the current printing job, then press and hold [FEED] for about 4 seconds, then the LCD will display menu for printing setup

Items to be set and operating guide

Table 3-5 Main Menu Description

Main Menu	Description
EXIT	Exit the setup menu
PRINT DARKNESS	When set as "0", the printer would either follow the command settings or the default values (10/20 or 15/30 for PRINT DARKNESS, 2ips for PRINT SPEED) when the relevant command settings are absent; When set as other values, the printer would follow the settings in the printer LCD menu, command settings would not take effect.
PRINT SPEED	
LANGUAGE	Options: CHINESE, ENGLISH, ESPA Default: ENGLISH
PRINT MODE	Options: THERMAL TRANSFER, DIRECT THERMAL Default: THERMAL TRANSFER
TEAR MODE	Tear-off Mode Options: ENABLE, DISABLE Default: ENABLE
CUT MODE	Cutter Mode/Peeler Mode Options: ENABLE, DISABLE Default: DISABLE
PEEL MODE	
SENSOR TYPE	Media Sensor Type Options: TRANSMISSIVE, LOWER REFLECTIVE, UPPER REFLECTIVE Default: TRANSMISSIVE
BAUD RATE	Options: 9600, 19200, 38400, 57600, 115200 Default: 38400
PARITY BIT	Options: NONE, ODD, EVEN Default: NONE

Main Menu	Description
DATA BITS	Options: 7 BITS, 8 BITS Default: 8 BITS
TEAR OFFSET	Adjust the media stop position over the tear-off bar after printing under tear-off mode. • Set higher values to move the media stop position out. • Set lower values to move the media stop position in. 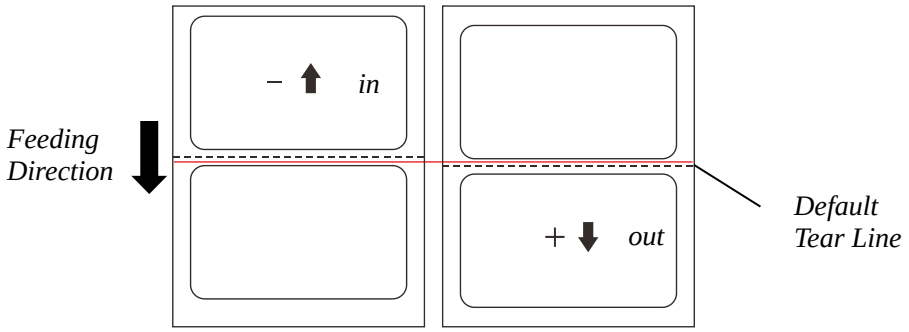
FEED OFFSET	Adjust the media stop position. • Set higher values to move the media stop position out. • Set lower values to move the media stop position in. 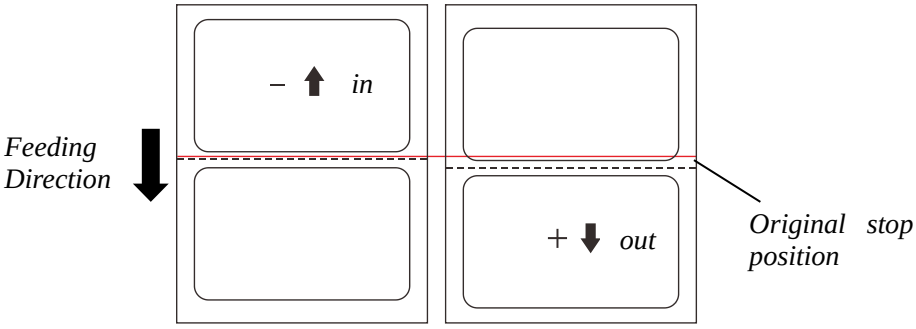
CUT OFFSET	Adjust the cut off position under cutter mode. • Set higher values to move the cut off position out. • Set lower values to move the cut off position in. 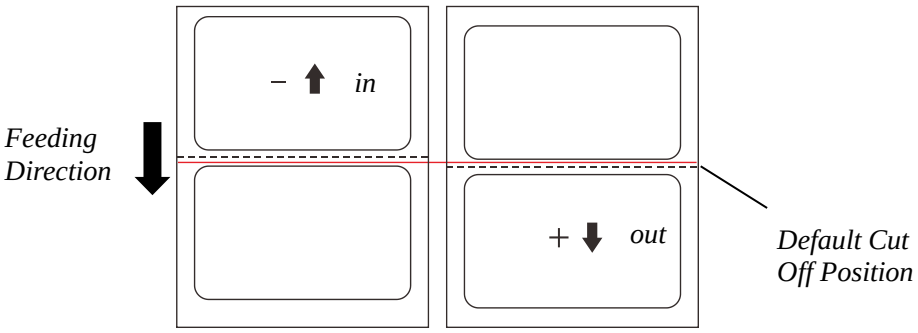

Main Menu	Description
PEEL OFFSET	Adjust the peel off position under peeler mode. • Set higher values to move the peel off position out. • Set lower values to move the peel off position in. 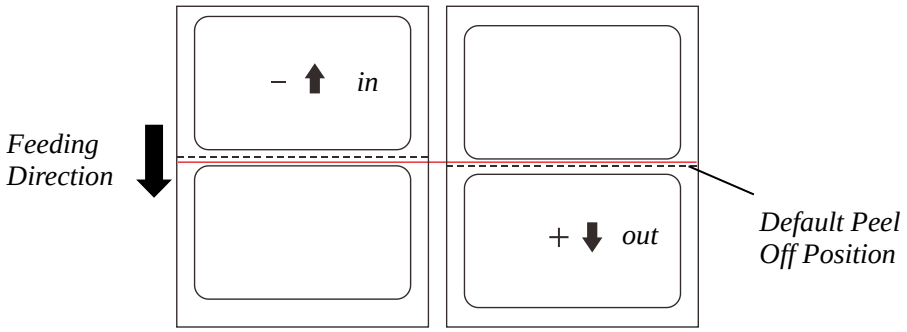
H-OFFSET	H-OFFSET adjusts the horizontal position of the printout. • Set higher values to move the printout towards right. • Set lower values to move the printout towards left. 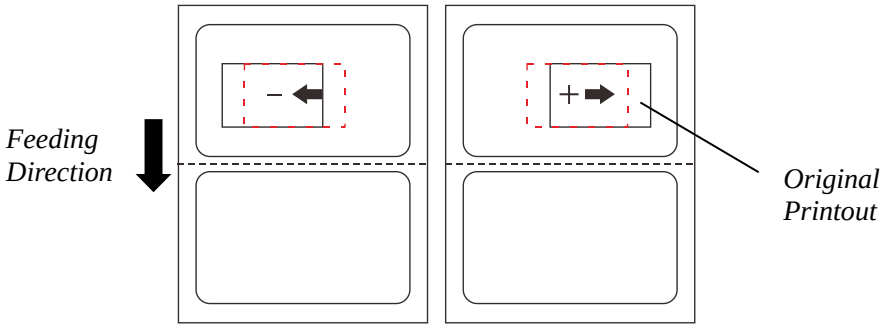
V-OFFSET	V-OFFSET adjusts the vertical position of the printout. • Set higher values to move the printout up (the printout moves in the opposite direction of feeding). • Set lower values to move the printout down (the printout moves in the direction of feeding). 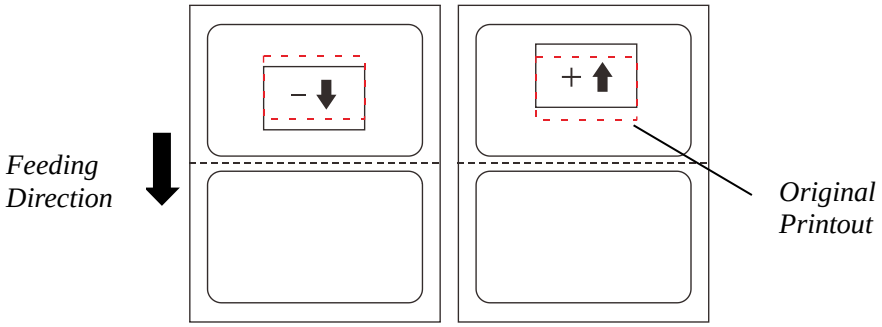 **NOTE** *Vertical offset can only be set to a value not less than 0.*
CUT FREQUENCY	Specify the quantity of the printed labels for each cut. Default value: 01 Range: 01 to 99
ERROR FEEDBACK	Allow or forbid the printer to send back error information to the host. When it is enabled, the printer would send back the current status information to the host via the communication port after receiving ^ee command. Options: ENABLE, DISABLE Default: ENABLE

Main Menu	Description
IP ADDRESS	The range of XXX is 0-255, press [PAUSE/Self Test] to decrease, [CANCEL/■►Reset] to increase, [FEED/Calibrate] to move to next XXX. Upon completion, pressing [FEED/Calibrate] will proceed to the "Save/Abort" screen.
SUBNET MASK	
GATEWAY	
NETWORK PORT	Set network port. Default: 9100
SET DATE	Set system date.
SET TIME	Set system time.
FONT LIST	Browse the stored fonts.
DELETE FONTS	Delete stored fonts.
CMD TYPE	Select the command type that the printer recognizes. Options: PPLE, PPLZ Default: PPLE
DHCP	After DHCP is enabled, the printer will ask for a restart. As the printer being powered on again, the LCD will prompt "DHCP CONFIGURING, PLEASE WAIT…" Normally it takes 2 minutes to finish the network settings. If failed, the printer will disable the DHCP and prompt "DHCP CONFIGURATION FAILED, PLS CHECK NETWORK CONNECTION!" Options: ENABLE, DISABLE Default: DISABLE
DUMP MODE	In dump mode, the printer will print out the data (print commands) that are sent from PC or other devices, instead of executing the print task. Options: ENABLE, DISABLE Default: DISABLE
CALIB LENGTH	Set media feeding length for calibration. Default 200, the unit is mm. NOTE *Calibration length shall be set to at least twice of the height of one label.*
STANDALONE MODE	Standalone function is available when the printer is connected to a keyboard or scanner. Label form needs to be downloaded to the FLASH ROM in advance.
DELETE FORMS	Clear the forms downloaded to the printer.
DELETE IMAGES	Clear the graphics downloaded to the printer.
LOAD DEFAULT	Restore factory default settings.
BITMAP CONVERT*	Set the bitmap size. When set as NONE, the bitmap would be in normal size. When set as 300->600, the bitmap size would be enlarged by 1 time; When set as 600->300, the bitmap size would be reduced by 1 time. Options: NONE, 300->600, 600->300 Default: NONE

Main Menu	Description
SCALE CONVERT	Set the size of the printout. When set as NONE, the print contents would be in normal size; When set as X0.5, the print contents would be reduced by 1 time; When set as X2, the print contents would be enlarged by 1 time. Options: NONE, X0.5, X2 Default: NONE

** Only available for 300dpi and 600dpi printers.*

3.1.5 Setting Operation Mode

CAUTION

- *Cutter and Peeler Mode are built upon Tear-off Mode, switching Cutter or Peeler Mode on will automatically enable Tear-off Mode.*
- *The Printhead needs to be closed before adjustment can be made to the settings menu.*

Tear-off Mode

The steps to set the printer to Tear-off Mode are as follows:

1. Connect the printer to PC using the preferred communication port and connect the printer power supply.
2. Install the media and ribbon as shown above, turn on the printer and wait for the printer to boot normally.
3. After "READY" is displayed on the screen, press the [MENU] button to enter the setting menu. Find "TEAR MODE" in the menu and select it, select "ON" to enable Tear-off Mode.
4. Gently press the [MENU] button twice to exit the setting menu.
5. Press the [MEDIA CALIBRATION] button, the printer will automatically feed labels and the media calibration is done.
6. Create the label template on your PC using the Bartender label software. Click at "print" to initiate the print job. After the print job is complete, the gap between the labels would stop at the edge of the tear-off bar, so the label can be torn off easily.
7. If the stopping position of the label needs to be adjusted, press the [MENU] button to enter the setting menu. Select "TEAR OFFSET" and adjust the value accordingly.

Peeler Mode (Peeler accessory required)

The steps to set the printer to Peeler Mode are as follows:

1. Connect the printer to PC using the preferred communication port and connect the printer power supply.
2. Install the media and ribbon as shown above, turn on the printer and wait for the printer to boot normally.
3. After "READY" is displayed on the screen, press the [MENU] button to enter the setting menu. Find "PEEL MODE" in the menu and select it, select "ON" to enable Peeler Mode.
4. Gently press the [MENU] button twice to exit the setting menu.
5. Press the [MEDIA CALIBRATION] button, the printer will automatically feed labels and the media calibration is done.
6. Create the label template on your PC using the Bartender label software. Click at "print" to initiate

the print job.

7. Removed the peeled label, and the printer will resume printing.
8. If the peeling position of the label needs to be adjusted, press the [MENU] button to enter the settings menu. Select "PEEL OFFSET" and adjust the value accordingly.

Cutter Mode (Cutter accessory required)

The steps to set the printer to Cutter Mode are as follows:

1. Connect the printer to PC using the preferred communication port and connect the printer power supply.
2. Install the media and ribbon as shown above, turn on the printer and wait for the printer to boot normally.
3. After "READY" is displayed on the screen, press the [MENU] button to enter the setting menu. Find "CUT MODE" in the menu and select it, select "ON" to enable Cutter Mode.

   NOTE

   Peeler Mode and Cutter Mode can't be both enabled at the same time, please turn off Peeler Mode first before switching Cutter Mode on.
4. Gently press the [MENU] button twice to exit the setting menu.
5. Reset the cutter before use. To reset, press and hold the [CANCEL] button until three indicators start blinking (This process takes around 4 seconds), release the button and press it again to finish the reset.

   NOTE

   Please reset the cutter before installing the media to prevent any issues with installation.
6. Turn the power supply off. Load the ribbon and media in the order as shown above. Thread the media through the opening on the cutter as shown in Figure 3-2 (only Media Core Supporting Blade mechanism is illustrated).

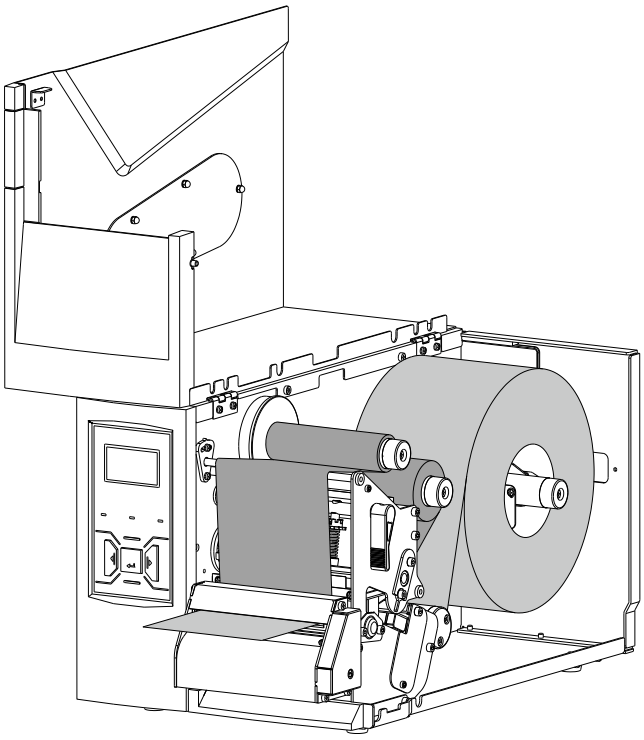

Figure 3-2 Cutter Mode

7. Turn on the printer and press the [MEDIA CALIBRATION] button, the printer will automatically feed labels and the media calibration is done.

8. Create the label template desired on PC using the Bartender label software. Click at "print" to initiate the print job. After each finished printing, the printer will automatically cut off the printed label(s).
9. If the cutting position of the label needs to be adjusted, press the [MENU] button to enter the settings menu. Select "CUT OFFSET" and adjust the value accordingly.

3.2 Adjusting the Printhead Pressure and Balance

CAUTION

A qualified technician is required to adjust the printhead pressure or printhead balance. Printhead damage or poor printout quality may occur if the procedure is not done correctly.

The printhead pressure comes from two spring assemblies, the force generated by the two springs is transferred to the printhead via two Pressure Bars, as shown in Figure 3-3 (only Media Core Supporting Blade mechanism is illustrated).

Adjusting the position of a Pressure Bar changes the pressure across the printhead and platen roller, thus it has immediate impact on the evenness of printout.

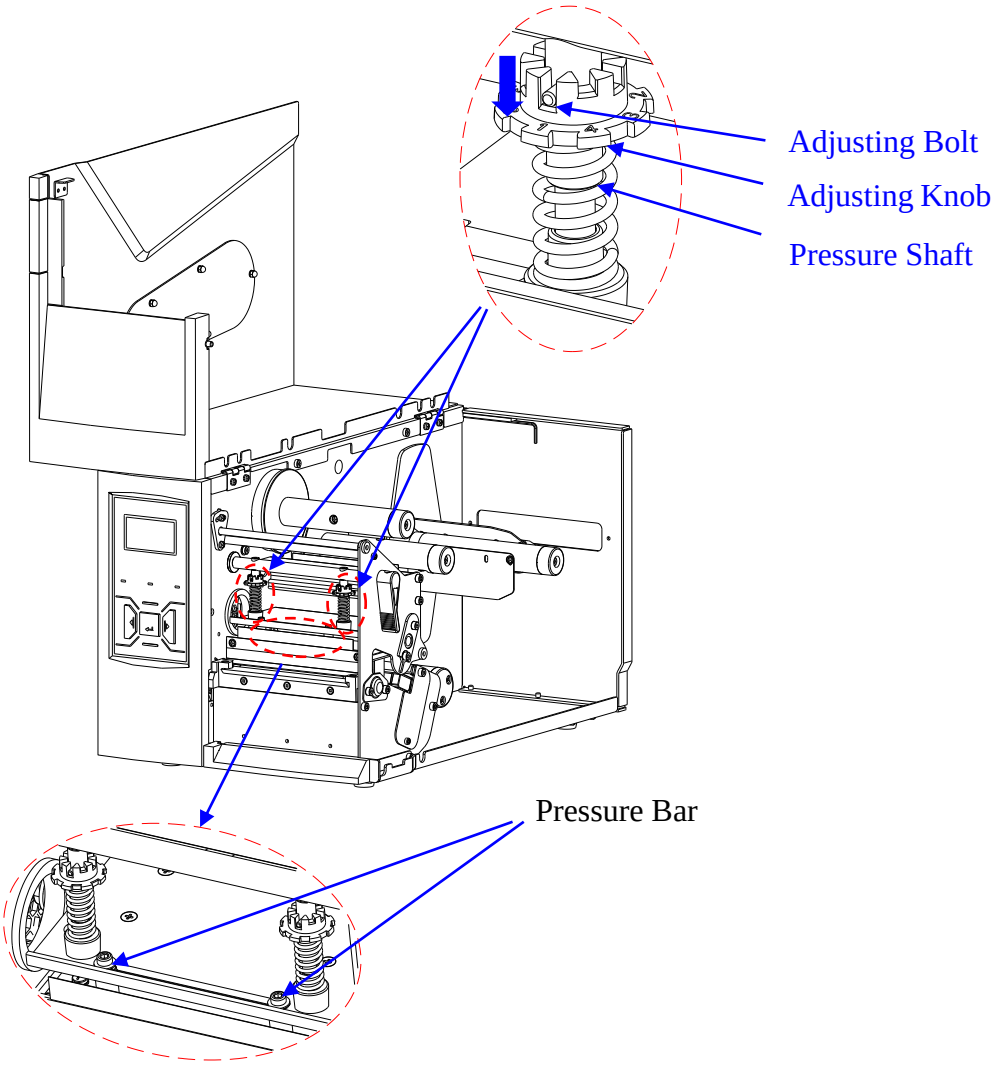

Figure 3-3 Printhead Pressure and Balance Adjustment

Follow the steps below to adjust the printhead pressure:

1. Press down the Adjusting Knob, and twist the Adjusting Knob to align the numbered pressure level with the Adjusting Bolt to apply different level of pressure (The bigger the number, the more pressure the spring assembly brings to the printhead).
2. Repeat step 1 on another spring assembly to complete the adjustment of the printhead pressure.

Follow the steps below to adjust the printhead balance:

1. To adjust the balance of the printhead, only one Pressure Bar's position needs to be adjusted. Moving the Pressure Bar to the left increases the left side pressure of the printhead; moving the Pressure Bar to the right increases the right side pressure of the printhead. Always place one Pressure Bar at end position when making adjustments. Choose the left side or right side Pressure Bar to adjust, then slightly loosen the Pressure Bar by using the Allen wrench bundled with the printer.
2. Slide the Pressure Bar to an estimated position and fasten it with the Allen wrench.
3. Test print to check the evenness of the printout quality.
4. Repeat steps 2 and 3 until even printout is achieved.

3.3 Adjusting the Ribbon Spindle Tension

Tension on both ribbon supply and ribbon take-up spindles can be adjusted, refer to Figure 3-4 (only Media Core Supporting Blade mechanism is illustrated), by following the steps below.

1. Slightly loosen the Setscrew with the Allen wrench bundled with the printer.
2. To increase the tension, turn the Tension Adjustment Screw clockwise by the Allen wrench; to decrease the tension, turn it counterclockwise. The tension level can be read from the Tension Level Indicator. When tension is set at desired level, fasten the Setscrew to complete the adjustment.

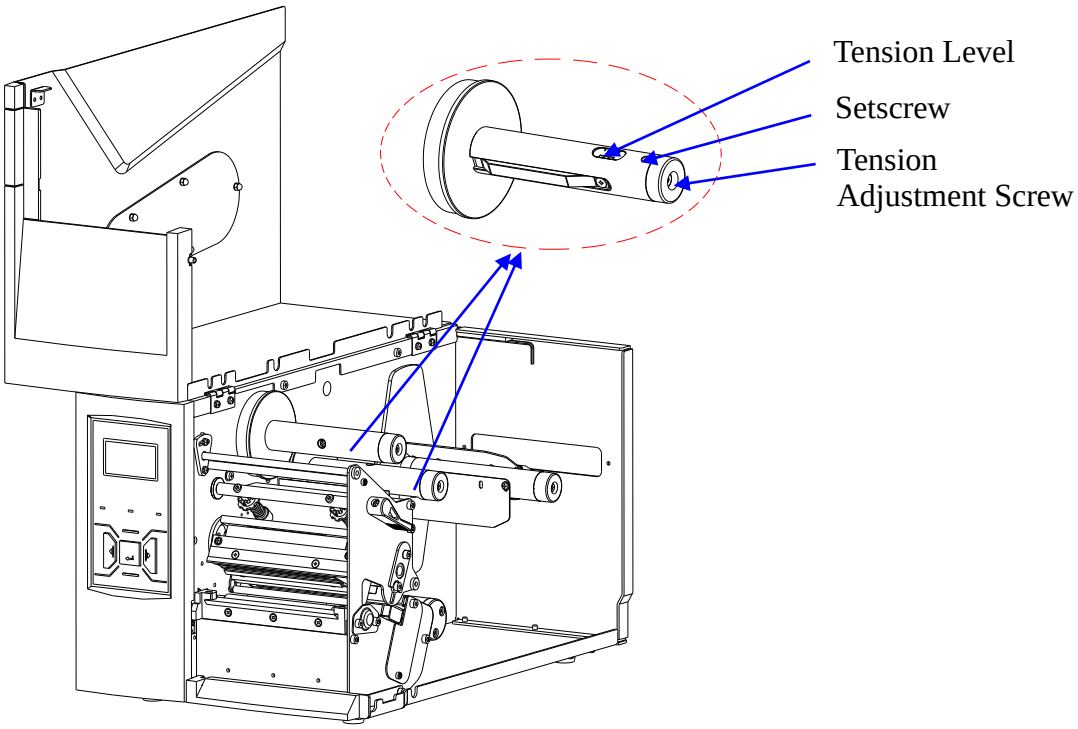

Figure 3-4 Ribbon Spindle Tension Adjustment

3.4 Installing Windows Driver and Label Editing Software

The printer driver supports Win10/8/7. To access to the driver, please scan the QR code on the Quick Start Guide or visit POSTEK website: http://www.postekchina.com.

Each printer also comes with a BarTender UltraLite edition software. To access to the software and the directions for use, please scan the QR code on the Quick Start Guide or visit POSTEK website: http://www.postekchina.com.

CAUTION

Please uninstall the old version driver before driver updating.

Chapter 4: Maintenance

WARNING

- *Make sure the printer is powered off before performing maintenance operations.*
- *The Printhead may be hot due to recent printing. Wait until the Printhead cools before performing maintenance.*
- *Use only anhydrous isopropyl alcohol to clean the print head.*

4.1 Cleaning the Printhead

Due to the Printhead's functionality in the printer, it comes into contact with consumables and therefore is susceptible to dirt accumulation. If dirt is not removed, the Printhead may be damaged. To ensure longevity of the Printhead, follow the recommended maintenance guidelines below:

Clean the Printhead after every (1) roll of ribbon use or every (3) rolls of label media use. To clean the Printhead:

1. Turn off the printer.
2. Lift to open the right cover of the printer.
3. Turn the Lever counter clockwise to open the Printhead.
4. Remove the ribbon (if applicable) and media.
5. Use a cotton swab dipped in anhydrous isopropyl alcohol. Wipe the Printhead from end to end.
6. Allow a few seconds for the Printhead to dry before using the printer again.

4.2 Cleaning the Platen Roller

The roller can accumulate debris from consumables, such as dirt, sand, dust or glue. To ensure longevity of the Platen Roller, follow the recommended maintenance guidelines below:

Clean the Platen Roller after every (3) rolls of label media used. To clean the Platen Roller:

1. Turn off the printer.
2. Lift to open the right cover of the printer.
3. Turn the Lever counter clockwise to open the Printhead.
4. Remove the ribbon (if applicable) and media.
5. Use a cotton swab dipped in anhydrous isopropyl alcohol. Rub the swab along the Platen Roller from end to end while rotating the roller, until the swab no longer accumulates ink or debris.

4.3 Cleaning the Printer Interior

Over time, the printer's interior may collect dust or debris from the consumables. It is advised to periodically clean the printer's interior in order to prevent the accumulated debris from damaging internal parts.

To clean the printer interior, use a cotton swabs dipped into anhydrous isopropyl alcohol and remove any debris.

4.4 Cleaning the Sensors

Over time, dust and debris will accumulate over the sensors and affect their performance, to ensure proper detection, please clean the sensors with cotton swabs dipped into anhydrous isopropyl alcohol periodically.

Chapter 5: Troubleshooting

Occasionally situations occur that require some troubleshooting. Possible issues and potential solutions are listed in this section. While not every situation is addressed, you may find some of these tips useful.

5.1 LCD Error Messages

The LCD displays messages when there is an error. See Table 5-1 for LCD errors, the possible causes, and the recommended solutions.

Table 5-1 Error Messages

LCD Display	Possible Cause	Recommended Solution
PRINTHEAD OPEN	The printhead is unlocked.	Turn the Lever clockwise to lock the Printhead in place.
MEMORY ERROR	Problems occurred with printer's flash or RAM memory during printing or executing printing data/command.	Please restart the printer, and then disable the "DUMP MODE" setting from the main menu. Or contact an authorized POSTEK service provider for technical support if problems exist.
DATA ERROR	The labels' data has been sent to printer but cannot be identified due to the invalid format or syntax.	Please follow the command syntax or data format in the command manual to edit data, and then resend it to the printer.
RIBBON ERROR	See 5.2 LED Error Indications for more information.	
MEDIA ERROR		
SYSTEM MODE	Press and hold [CANCLE] for 4 seconds, then the printer will enter the system mode, and display this message on LCD.	To perform the advanced functions or the printer will return to normal state automatically if no operations are performed within 4 seconds.
UPGRADE FAILED	The firmware upgrade is interrupted.	Please contact an authorized POSTEK service provider for technical support.

5.2 LED Error Indications

Typically, when the printer is not functioning, one or two of the three indicators will begin blinking. The possible situations addressed by the status of the three indicators are listed in Table 5-2.

Table 5-2 LED Error Indications

Indication	Possible Cause	Solutions	Important Notice
[READY] and [MEDIA] indicators blink simultaneously	Media sensor can't detect media	• Check and confirm the media has been loaded correctly • Check the position of the media sensor and confirm it could detect the media gap, hole, notch or black mark • Calibrate the media sensor	If the media being used is continuous media (no locator present on the label). Then please set the media to Continuous Media in the printer driver settings.
	Media ran out	Load a new roll of media	If the printer has not been powered off and the print job has not been finished, after clearing the error: • Press [FEED] button to select Reprint or Print Next. • Press [CANCEL] button to choose whether to cancel the print job or not.
	Media jammed	Clear the jam	
	Media sensor is dirty	Clean the Media sensor	
	Media sensor is out of order	Contact an authorized POSTEK service provider for technical support.	
[READY] and [RIBBON] indicators blink simultaneously	Out of ribbon	Load a new roll of ribbon	
	Ribbon jammed	Make sure the ribbon follows a steady and smooth path	
	Ribbon sensor is dirty	Clean the ribbon sensor	
	Ribbon Sensor is out of order	Contact an authorized POSTEK service provider for technical support.	
Only [READY] indicator blinks	The printer is in a paused state	Press the [PAUSE] button to resume	
	The printhead is unlocked	Turn the Lever clockwise to lock the Printhead in place	
	Cutter error	Please check whether the cutter is installed correctly, for details, please contact an authorized POSTEK service provider for technical support.	
	Memory overflow	• Restart the printer • Reset the printer	

5.3 Miscellaneous Issues

Table 5-3 identifies miscellaneous issues with the printer, the possible causes, and the recommended solutions.

Table 5-3 Miscellaneous Printer Issues

Problem	Possible Cause	Recommended Solution
Vertical Blank Lines Appear	Printhead is dirty.	Clean the Printhead. Follow the recommended maintenance guidelines for cleaning the Printhead.
Data Sent but Not Printing	The driver is incorrect.	Ensure the correct driver is chosen in the label software.
	Memory overflow	Reset the printer.
Poor Printing Quality	The printing parameters are set inappropriately.	• Adjust print darkness setting value. • Adjust print speed setting value.
	Printhead is dirty.	Clean the Printhead. Follow the recommended maintenance guidelines for cleaning the Printhead.
	Poor quality consumables	Change to higher-quality consumables.

NOTE

For errors not listed here, please contact an authorized POSTEK Service Provider for further assistance.

Appendix A: Interface Specifications

The RS232 connector on the printer is a DB9F:

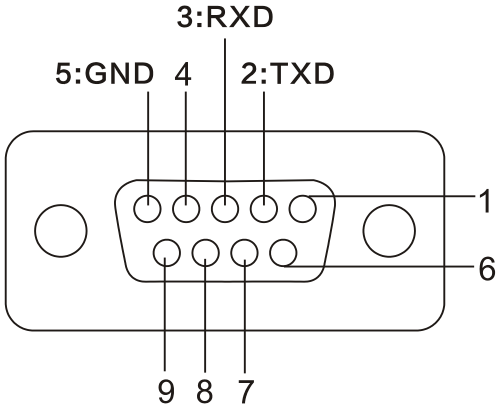

Number	Description	Definition
1	/	/
2	Out	TX
3	In	RX
4	/	/
5	-	Ground
6	/	/
7	/	/
8	/	/
9	/	/

Baud rate: 9600, 19200, 38400, 57600 and 115200
Data format: 8 data bits, 1 start bit or 1 stop bit.
Flow control: None. If you are using software or drivers under the Windows environment, the flow control must be set to "hardware."

Any communications port can transmit data from the host (RS232, Ethernet, or USB). Preliminary communications settings are not required since the printer will automatically detect which port is active.

CAUTION

Never send data from 2 ports at the same time. Data cannot be sent to more than one port simultaneously or data corruption and print errors may occur.

Appendix B: ASCII Table

	0	1	2	3	4	5	6	7
0	NUL			0	@	P	`	p
1	SOH	XON	!	1	A	Q	a	q
2	STX		“	2	B	R	b	r
3		XOFF	#	3	C	S	c	s
4			$	4	D	T	d	t
5		NAK	%	5	E	U	e	u
6	ACK		&	6	F	V	f	v
7	BEL		‘	7	G	W	g	w
8	BS		(	8	H	X	h	x
9			)	9	I	Y	i	y
A	LF		*	:	J	Z	j	z
B		ESC	+	;	K	[	k	{
C	FF		,	<	L	\	l	|
D	CR		-	=	M	]	m	}
E	SO	RS	.	>	N	^	n	~
F	SI	US	/	?	O	_	o	DEL
	0	**1**	**2**	**3**	**4**	**5**	**6**	**7**

NOTE

The € sign is included in the embedded table at DEC128 or HEX 80.

POSTEK

www.postekchina.com