POSTEK

RUGGED PARTS, DURABLE MACHINES

# User's Manual

## TX Exp Series

RFID|Barcode Label Printer

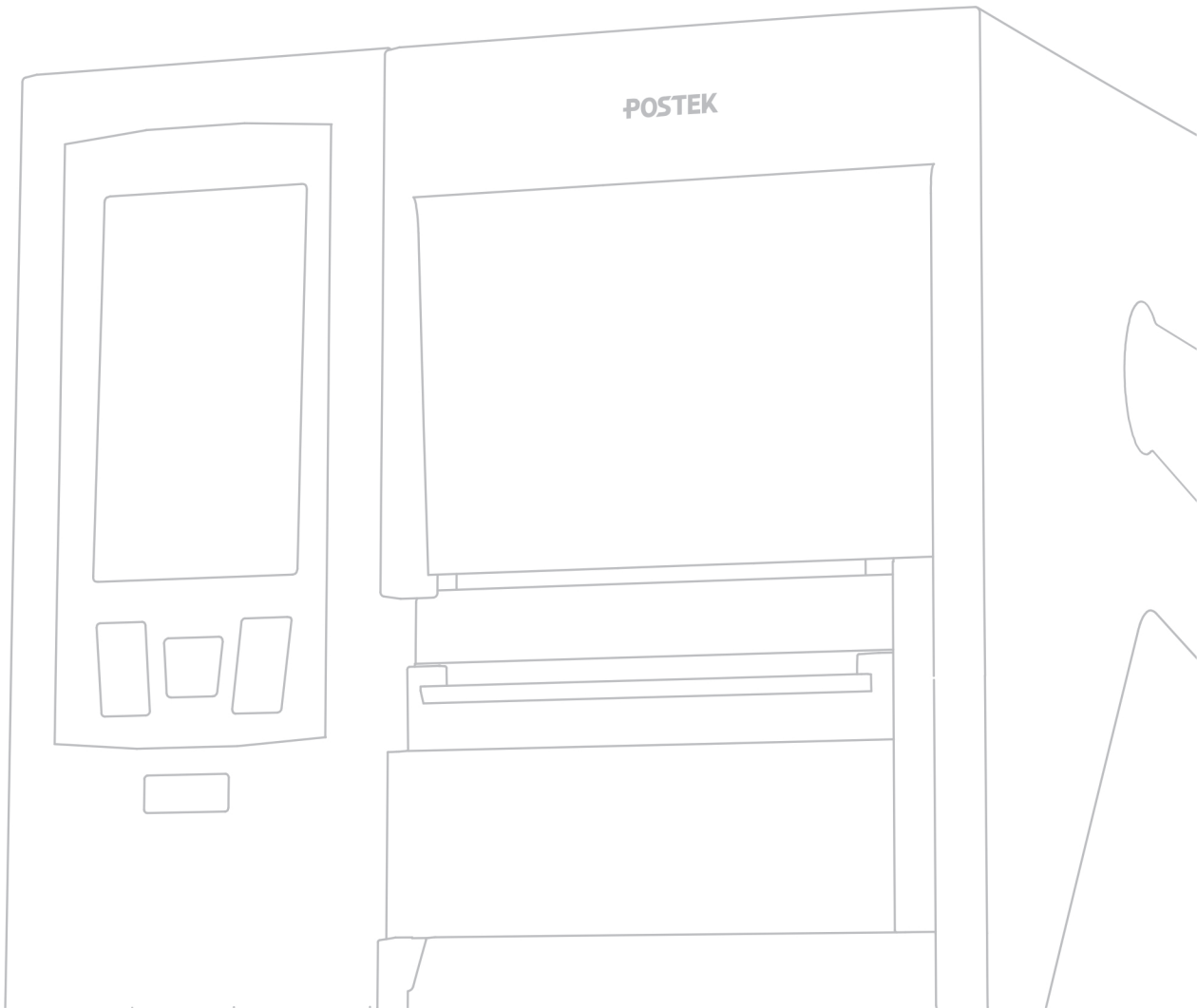

## FCC Notice

This device complies with Part 15 of the FCC Rules. Operation is subject to the following two conditions: (1) this device may not cause harmful interference, and (2) this device must accept any interference received, including interference that may cause undesired operation.

This equipment may generate, use and/or radiate radio frequency energy. If not installed and used in full accordance with this User's Manual, interference to radio communications may occur. This equipment complies with the limits for a Class A Information Technology Equipment pursuant to Part 15 of the FCC Rules, which are designed to provide reasonable protection against such interference when operated in a commercial environment. Operation of this equipment in a residential area may also cause interference. In such case the user, at his/her expense, will be required to correct the interference using whatever means necessary.

## Trademarks

POSTEK is a registered trademark by POSTEK Electronics Co., Ltd.
ARM is a registered trademark of Advanced RISC Machines Ltd.
Microsoft, Windows are registered trademarks of Microsoft Corporation.

## Copyright

© 2023 by Postek Electronics Co., Ltd. All rights reserved. Under the copyright laws, this manual cannot be reproduced in any form without the prior written permission of POSTEK. No patent liability is assumed, with respect to the use of the information contained herein.

## Disclaimer

POSTEK barcode/RFID printers are developed and produced by Postek Electronics Co., Ltd (hereinafter "POSTEK") with the adoption of direct thermal/thermal transfer printing and RFID encoding techniques. For thermal transfer printing, matching ribbons and media are required. Meanwhile, the wide variety of RFID chip and antenna designs makes it difficult to guarantee RFID tags 100% compatibility with POSTEK printers. To satisfy your printing needs, please consult with the reseller(s) to choose the matching consumables for POSTEK printers.

This manual has been validated and reviewed for accuracy. The instructions and descriptions it contains are accurate for the POSTEK printer at the time of this manual's distribution. However, succeeding printers and manuals are subject to change without notice. POSTEK assumes no liability for damages incurred directly or indirectly from errors, omissions or discrepancies between the printer and this manual.

To protect your interests, and to prevent loss due to improper handling, please read the corresponding user's manual before operation, and don't use the printer during abnormal conditions. In no event shall POSTEK be liable for any damage or loss caused by human misoperations, including but not limited to loss of business profits, business interruption, loss of business information, or other pecuniary loss.

Although this manual describes and details many issues which could possibly occur, the manufacturer cannot warrant against unpredictable conditions during the printer's application. For problems such as the printer not working, missed or unclear print content, etc., POSTEK and/or its resellers are

responsible for troubleshooting (according to POSTEK Warranty Clauses) only. In no event shall POSTEK or the resellers involved be liable for any direct or indirect loss, including but not limited to loss of business profits, business interruption, loss of business information, or other pecuniary loss.

## Important Safety Instructions

- Only qualified and trained service technicians should attempt to repair the printer.
- Do not place the printer on or near a heat source.
- Be sure that your power source matches the rating listed on the regulatory label on the back of the printer. Be certain your power source is grounded.
- To avoid getting an electric shock, do not use a worn or damaged power cord. If the power cord becomes damaged or frayed, replace it immediately.
- Do not insert anything into the ventilation slots or openings on the printer.
- The printer should never be operated in a location where it can get wet. Personal injury may result.
- The printhead becomes hot while printing. To protect from damaging the printhead and risk of personal injury, avoid touching the printhead.
- To get increased printhead longevity and higher quality printouts, always use approved labels, tags and thermal transfer ribbons. Approved supplies can be ordered from your POSTEK authorized reseller.
- Static electricity that accumulates on the surface of the human body or other surfaces can damage or destroy the printhead or electronic components in this device. DO NOT touch the printhead or the electronic components with bare hands.
- Place the printer on a flat, firm, solid surface.
- Never operate in a high-temperature environment.
- Turn off the power when not in use for extended periods.
- Follow all recommendations and setup instructions included in this manual.

# Contents

**Preface** ..... **1**

**Important Notes** ..... **2**

**Chapter 1: Introduction** ..... **4**

1.1 Specifications ..... 4
Optional Features ..... 5
1.2 Contents in the Box ..... 6

**Chapter 2: Setup and Use** ..... **7**

2.1 Main Parts and Structures ..... 7
2.1.1 Front View ..... 7
2.1.2 Interior View ..... 8
2.1.3 Rear View ..... 9
2.1.4 Consumables Loading Path ..... 10
2.2 Setting up the Printer ..... 12
2.2.1 Interface Connection ..... 12
2.2.2 Connecting the Printer ..... 12
2.2.3 Loading the Ribbon ..... 13
2.2.4 Loading the Media ..... 17
2.3 Installing the Printer Driver ..... 27
2.3.1 USB Port Installation ..... 27
2.3.2 Network Port Installation ..... 31
2.4 Installing Label Editing Software ..... 37

**Chapter 3: Operations and Settings** ..... **38**

3.1 The Front Panel ..... 38
3.1.1 Panel Buttons ..... 39
3.1.2 Status Indicator ..... 39
3.1.3 LCD Touchscreen ..... 40
3.2 Settings ..... 41
3.2.1 General Settings ..... 41
3.2.2 Communication ..... 52
3.2.3 RFID ..... 55
3.2.4 Management ..... 59
3.2.5 Advanced ..... 61
3.3 Mechanical Adjustments ..... 76
3.3.1 Adjusting the Media Sensor ..... 76
3.3.2 Adjusting the Printhead Pressure and Balance ..... 78
3.3.3 Adjusting the Ribbon Tension ..... 79

**Chapter 4: Maintenance** ..... **80**

4.1 Cleaning the Printhead ..... 80
4.2 Cleaning the Platen Roller ..... 80
4.3 Cleaning the Printer Interior ..... 80
4.4 Cleaning the Sensors ..... 81

**Chapter 5: Troubleshooting** ..... **82**

5.1 Error Messages ..... 82
5.2 Miscellaneous Issues ..... 89

**Appendix A: Interface Specifications ..... 90**
**Appendix B: ASCII Table ..... 91**

# Preface

Your POSTEK high performance industrial RFID label printer features innovative state-of-the-art technology and superior quality workmanship. Boasting an all metal frame and unique core construction, it achieves a sturdy and durable stationary platform for smooth printing. A powerful control system can easily handle the most complicated printing requirements, and advanced thermal transfer/direct thermal technology offers optimum printout clarity.

This manual explains how to set up and begin using your printer. It also provides detailed information on configuring your printer, basic operations, care, and troubleshooting.

Please read this manual carefully before using the POSTEK printer.

## Symbol Conventions

The symbols that may be found in this document are defined as follows.

| Symbol | Description |
|---|---|
| WARNING | Alerts you to a medium or low risk hazard that could, if not avoided, result in moderate or minor injury. |
| CAUTION | Alerts you to a potentially hazardous situation that could, if not avoided, result in equipment damage, data loss, performance deterioration, or unanticipated results. |
| NOTE | Provides additional information to emphasize or supplement important points in the main text. |

## Version

Version 1.0, published in January, 2023.

# Important Notes

Please read the following passages thoroughly before proceeding.

## Printhead

The thermal printhead can be easily damaged due to its precision construction. A printhead damaged by misuse is not covered under the terms of the warranty. To ensure longevity of the printhead, please note the following:

- DO NOT scrape or use tools that might damage the printhead surface.
- To protect from corroding the printhead, DO NOT touch the printhead with bare hands.
- DO NOT use thermal paper or thermal transfer ribbons which contain Na, K or Cl elements.
- Keep the printhead from any form of liquid or dampness.
- Only use a cotton swab dipped in anhydrous isopropyl alcohol to clean the printhead.
- Always use high-quality consumables:
  - When the printhead module is closed, pressure is placed directly onto the printhead; dirt such as paper scraps, sand, dust and glue can scrape or damage the printhead.
  - The printhead is also easily damaged by static electricity, which may be generated by poor quality ribbons.
- Always inspect consumables for high quality before purchasing.

**CAUTION**

***The printer functions under Direct Thermal or Thermal Transfer print modes. Thermal Transfer is set as the factory default (requires ribbon for printing). However, if you need to print on Direct Thermal materials (ribbon is not required), please contact your printer supplier or service provider to reduce the printhead pressure. This can protect your printhead from early performance deterioration due to direct contact with the thermal media. Any physical printhead damage caused by direct thermal printing is not covered under warranty.***

# Cutter (Optional)

The printer equipped with a cutter can automatically cut the label after printing. However, automatic cutters pose a safety hazard since the blades are very sharp. To prevent injuries and cutter failures while using one of the many types of automatic cutters, please follow the safety and maintenance rules listed below:

- Before using the cutter, be sure you have been trained by a qualified individual. A written procedure covering the cutter's use is recommended.
- It is very important to choose the right cutter model for the application to ensure personal safety and prevent damage to the cutter caused by cutting wrong types of media.
- Keep loose items such as long hair, clothing, jewelry, away from the cutter.
- Don't put anything except print media inside the cutter.
- Turn off power of printer if you notice abnormality with the cutting process and alert a qualified technician to resolve the issue.
- Never cut a print media which exceeds the maximum operating conditions of the cutter.
- Not every cutter model is designed to be able to cut through adhesive. Use only the dedicated cutters to cut through adhesive materials. Even so, regular cleaning is required to remove the adhesive built up on the blades over time to prevent cutter jam.
- Routine inspection and maintenance are required to be performed by a qualified technician to keep the cutter in good working conditions.

# Chapter 1: Introduction

## 1.1 Specifications

| **Model** | **TX2 Exp** | **TX3 Exp** | **TX6 Exp** |
|---|---|---|---|
| **Model with RFID** | **TX2r Exp** | **TX3r Exp** | **TX6r Exp** |
| Printing Mode | Direct Thermal and Thermal Transfer | | |
| Max Printing Speed | 16 ips (406.4 mm/s) | 12 ips (304.8 mm/s) | 6 ips (152.4 mm/s) |
| Max Printing Width | 4.09″ (104 mm) | 4.16″ (105.7 mm) | 4.16″ (105.6 mm) |
| Max Printing Length | 196″ (500 mm) | | |
| MPU | 64-bit, quad Arm® Cortex®-A53 core, maximum operating frequency 1.8 GHz | | |
| GPU | GC NanoUltra 3D (1 shader) &GC320 2D OpenGL ES 2.0 | | |
| Memory | 2GB DDR4 RAM, 8GB managed NAND flash | | |
| HEAT™ Level① | I | | |
| RFID Encoder | Supports UHF EPC Gen 2, ISO 18000-6C protocols<br>(Only available for RFID models) | | |
| Media Roll | Maximum Media Width: 4.56″ (116 mm)<br>Minimum Media Width: 0.39" (10 mm)<br>Maximum Outer Diameter: 8″ (203.2 mm)<br>Inner Diameter: 1.5″ (38 mm) / 3″ (76.2 mm) | | |
| Minimum Label Length | Tear-off: 0.2″ (5 mm) | | |
| | Cutter: A150/A400: 0.79″ (20 mm) | | |
| Media Thickness | Regular Barcode Label Printer and Regular RFID Label Printer: 0.0024″ ~ 0.012″ (0.06 ~ 0.305 mm), including liner | | |
| | Mount-on-Metal RFID Label Printer②: 0.063″ (1.6 mm) max., including liner | | |
| Ribbon | Maximum Ribbon Length: 1968' (600 m)<br>Maximum Ribbon Width: 4.65″ (118 mm)<br>Maximum Outer Diameter: 3.31″ (84 mm)<br>Inner Diameter: 1″ (25.4 mm)<br>Ink side: both In and Out | | |
| Media Sensor | Upper reflective: detects black marks on print side<br>Lower reflective: detects black marks on back side<br>Transmissive: detects gaps, notches, holes | | |

| Model | TX2 Exp | TX3 Exp | TX6 Exp |
|---|---|---|---|
| **Model with RFID** | **TX2r Exp** | **TX3r Exp** | **TX6r Exp** |
| Fonts | Five built-in dot matrix fonts, which include Basic Latin and Latin-1 Supplement character sets.<br>Two built-in scalable fonts. One supports Latin, Greek and Cyrillic scripts, and the other is a GB2312 Chinese character set specifically.<br>User downloadable TrueType fonts. | | |
| Barcode Types | 1D Barcodes: Code 39, Code 93, Code 128/subset A,B,C, Codabar, Interleave 2 of 5, UPC A/E 2 and 5 add-on, EAN-13/8/128, UCC-128, GS1-128, etc.<br>2D Barcodes: MaxiCode, PDF417, Data Matrix, QR Code, GS1 DataMatrix, GS1 QR Code, CS Code, etc. | | |
| Interfaces | RS-232 Serial, 10/100/1000Mbps Adaptive Ethernet, USB DEVICE 2.0, USB HOST | | |
| LCD Display | 4.5″ LCD Capacitive Touchscreen | | |
| Power Source | 100 ~ 240 V AC, 50/60 Hz | | |
| Weight | 33.06 lbs (15 kgs) | | |
| Dimensions | W 11.3″ (286 mm) x D 17.6″ (448 mm) x H 10.7″ (271 mm) | | |
| Operating Environment | Temperature: 32° F ~ +104° F (0° C ~ 40° C)<br>Relative humidity: 5% - 90% non condensing<br>Maximum Altitude: 5000 m | | |
| Storage Environment | Temperature: -40° F ~ +140° F (-40° C ~ 60° C)<br>Relative humidity: 5% - 90% non condensing | | |

①: *HEAT™, or Heating Equilibrium Adaptive Tuning, is a POSTEK designed and developed cutting-edge technology that sets the benchmark for heat management in thermal printing. Printers equipped with HEAT™ have significant improvements in their printout clarity and print speed. The HEAT™ level represents the fineness of the heating uniformity with level I being the finest.*

②: *For Mount-on-Metal RFID tags, the flexibility of the tag and whether or not to use fillings to bridge the gaps between tags can affect print quality and even encoding success rate. It is strongly recommended to test the tags on this POSTEK printer before purchasing.*

## Optional Features

| | | | |
|---|---|---|---|
| RFID Verifier* | External-mount module (Only available for RFID models) | | |
| Wireless Module* | WIFI IEEE 802.11a/b/g/n/ac/ax, 2.4/5GHz, Bluetooth 5.0 | | |
| Cutters | Type | Rotary Cutter | |
| | Model | A150 | A400 |
| | Max. Cut Width | 120 mm | 120 mm |
| | Min. Cut Length | 20 mm | 20 mm |
| | Cut Thickness (white cardboard paper) | 0.20 mm | 0.20 ~ 0.35 mm |

| | | | |
|---|---|---|---|
| | Cut Through Adhesive | Yes | Yes |
| | Cuts Guaranteed | 600,000 | 600,000 |

**Factory dependent.*

## 1.2 Contents in the Box

Inspect the shipping carton(s) for possible shipping damage, if damage is discovered, notify the shipping company to report the nature and extent of the damage.

Please check the items according to the Quick Start Guide. If there are any items missing, notify your authorized reseller.

# Chapter 2: Setup and Use

## 2.1 Main Parts and Structures

### 2.1.1 Front View

Figure 2-1 shows the front view of the printer.

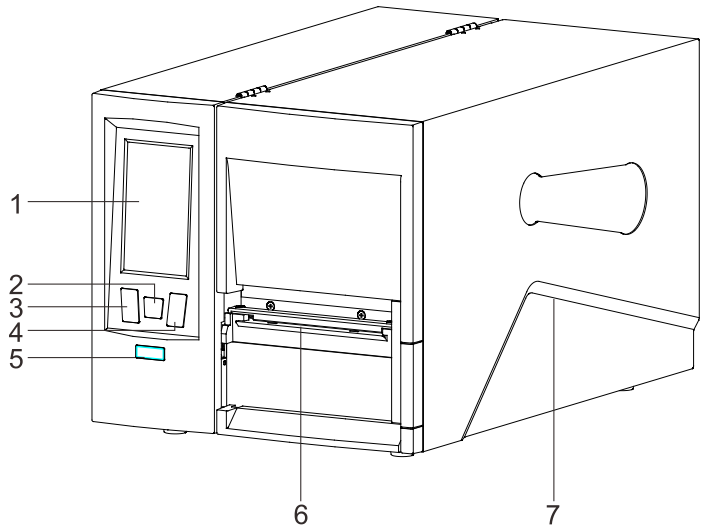


Figure 2-1 Front View

Table 2-1 Front View Description

| Number | Description |
|---|---|
| 1 | LCD Touchscreen |
| 2 | [FEED/Calibration] Button |
| 3 | [PAUSE/Self Test] Button |
| 4 | [CANCEL/Reset] Button |
| 5 | Status Indicator |
| 6 | Tear-off Bar |
| 7 | Right Cover |

## 2.1.2 Interior View

Figure 2-2 shows the interior view of the printer.

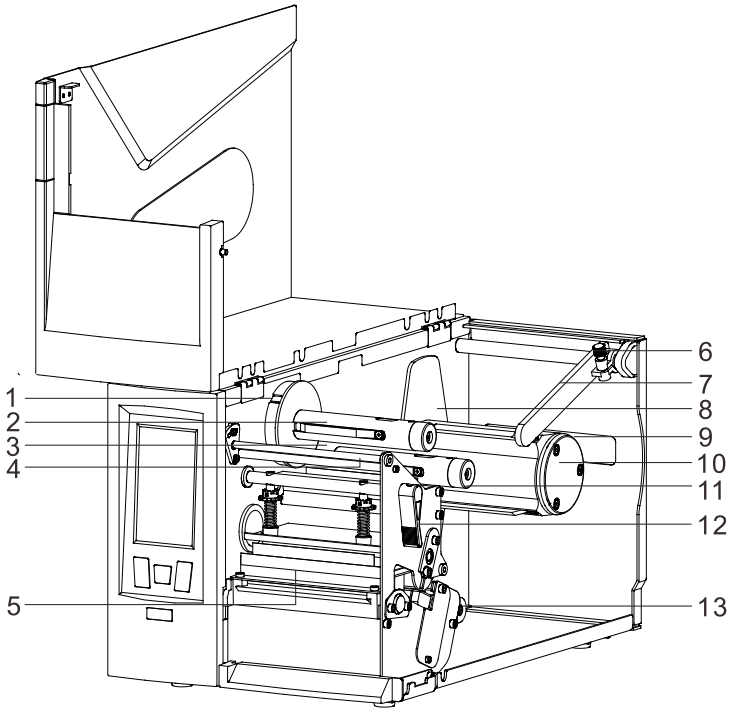


Figure 2-2 Interior View

Table 2-2 Interior View Description

| Number | Description |
|---|---|
| 1 | Stop Plate_Ribbon Take-up Spindle |
| 2 | Ribbon Take-up Spindle |
| 3 | Stop Plate_Ribbon Supply Spindle |
| 4 | Ribbon Guide Rod |
| 5 | Printhead Assembly |
| 6 | Thumbscrew |
| 7 | Media Roll Guide |
| 8 | Stop Plate_Media Spindle |
| 9 | External Media Loading Slot |
| 10 | Media Spindle |
| 11 | Ribbon Supply Spindle |
| 12 | Lever |
| 13 | Media Guide Roller |

## 2.1.3 Rear View

The printer is equipped with multiple interfaces. See Figure 2-3.

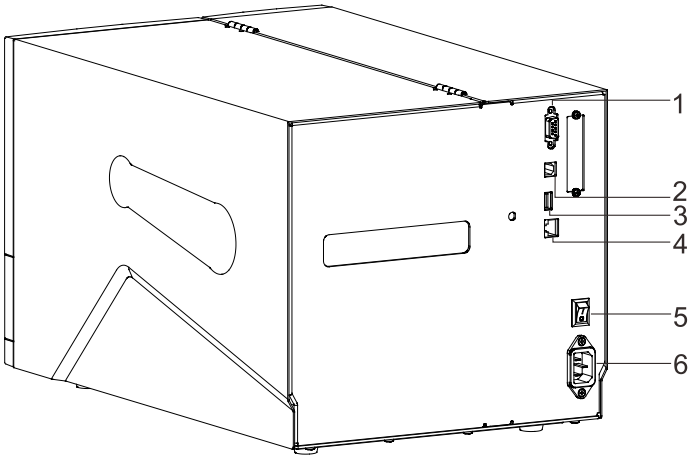


Figure 2-3 Rear View

Table 2-3 Rear View Description

| Number | Description |
|---|---|
| 1 | RS-232 Serial Port |
| 2 | USB Device |
| 3 | USB Host |
| 4 | Ethernet Port |
| 5 | Power Switch |
| 6 | AC Port |

## 2.1.4 Consumables Loading Path

Figure 2-4 shows the consumables' loading paths in Tear-off mode.

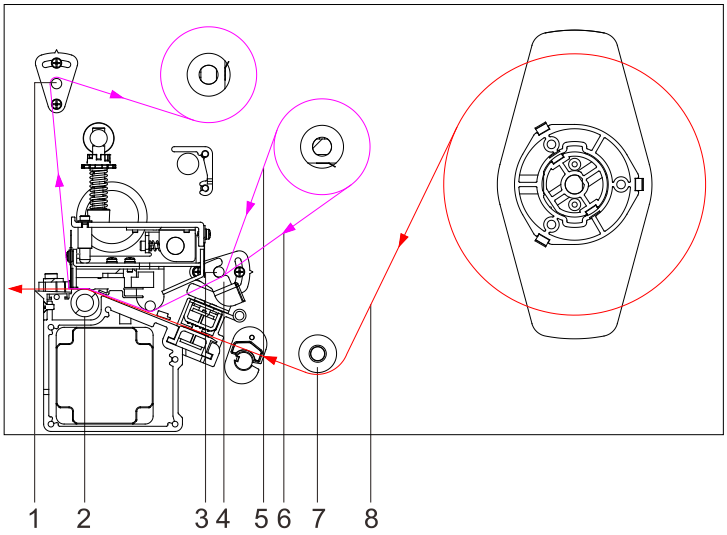


Figure 2-4 Loading Paths in Tear-off Mode

Table 2-4 Loading Path Description

| Number | Description |
|---|---|
| 1 | Ribbon Guide Rod (Ribbon Take-up) |
| 2 | Platen Roller |
| 3 | Ribbon Guide Rod (Ribbon Supply) |
| 4 | Ribbon End Sensor |
| 5 | Ribbon Path (Ribbon-ink side: in) |
| 6 | Ribbon Path (Ribbon-ink side: out) |
| 7 | Media Guide Roller |
| 8 | Media Path |

Figure 2-5 shows the consumables' loading paths in Cutter mode (Cutter is optional).

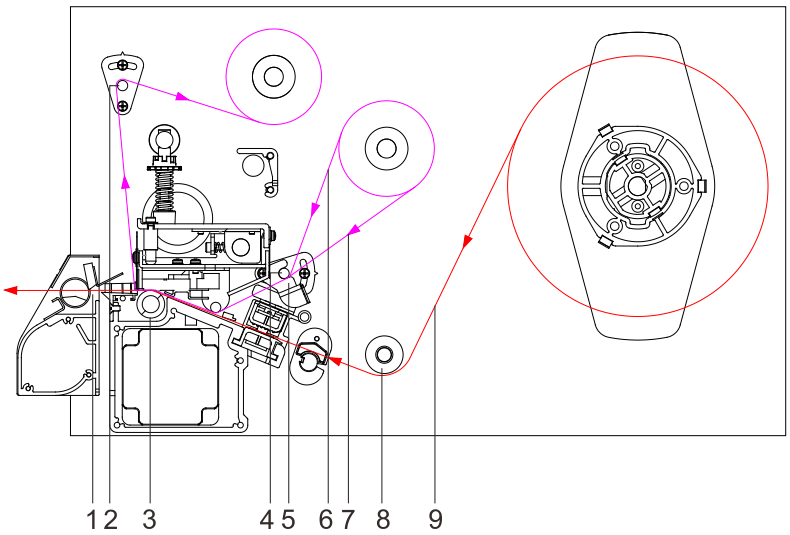


Figure 2-5 Loading Paths in Cutter Mode

Table 2-5 Loading Path Description

| Number | Description |
|---|---|
| 1 | Media Feed Opening (Cutter) |
| 2 | Ribbon Guide Rod (Ribbon Take-up) |
| 3 | Platen Roller |
| 4 | Ribbon Guide Rod (Ribbon Supply) |
| 5 | Ribbon End Sensor |
| 6 | Ribbon Path (Ribbon-ink side: in) |
| 7 | Ribbon Path (Ribbon-ink side: out) |
| 8 | Media Guide Roller |
| 9 | Media Path |

# 2.2 Setting up the Printer

## 2.2.1 Interface Connection

The printer supports RS-232 Serial, USB DEVICE and 10/100/1000 Mbps Adaptive Ethernet interface connections.

**To connect:**

- Make sure the printer is powered OFF.
- The printer will identify the communication port automatically.
- The default settings of the printer port can be obtained from the self-test report.
- Cable configurations for Serial (RS-232C) interface can be found in Appendix A: Interface Specifications.
- Please take the following measures to reduce cable noise.
  - Restrict the length of the interface cable to less than 6' (1.83 M) if possible.
  - Keep the interface cable separate from the power cords.

## 2.2.2 Connecting the Printer

**WARNING**

- *Do not use the printer near liquids or corrosive chemicals.*
- *Connecting to a wrong power source may cause damage to your printer. POSTEK assumes no liability for any damage in such cases. The rating for the printer is 110/240 VAC ±10%, 50/60 Hz.*

1. Make sure the printer is switched OFF.
2. Plug the female end of the power cord into the AC Port on the back of the printer. See Figure 2-6.

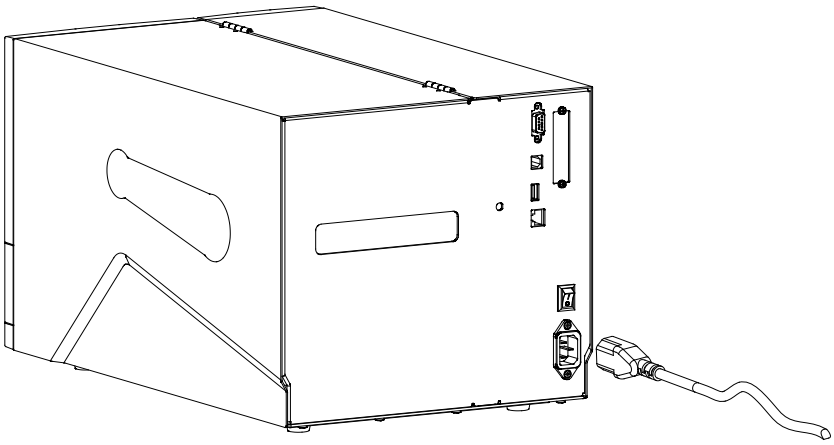

Figure 2-6 Connect the Power Cord

3. Plug the male end of the power cord into a live wall outlet. See Figure 2-7.

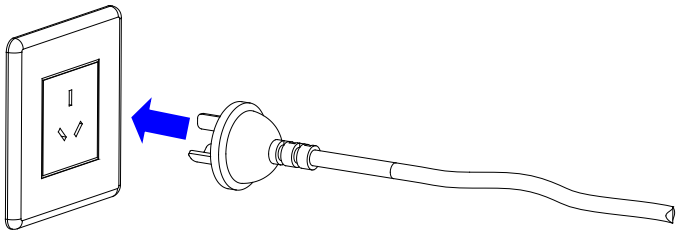

Figure 2-7 Plug the Power Cord

**NOTE**

*The shape of power plug varies depending on the region in which it was purchased.*

## 2.2.3 Loading the Ribbon

**CAUTION**

- *Load ribbon only when using the thermal transfer printing mode. Remove any ribbon that may be loaded when using the direct thermal printing mode.*
- *Use ribbon that is wider than the media to protect the printhead form wear.*

To load the ribbon, refer to Figure 2-8 through Figure 2-13 and follow the steps below:

1. Lift to open the right cover of the printer.
2. Turn the Lever counter clockwise to open the Printhead. See Figure 2-8.

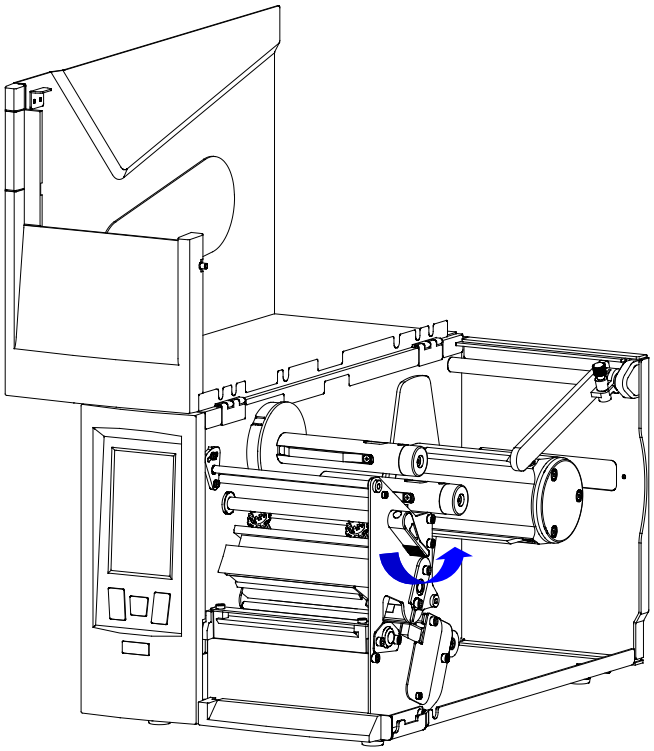

Figure 2-8 Open the Printhead

3. Stick a label to the outside/ inside of the ribbon to check which side the ink is on. See Figure 2-9.

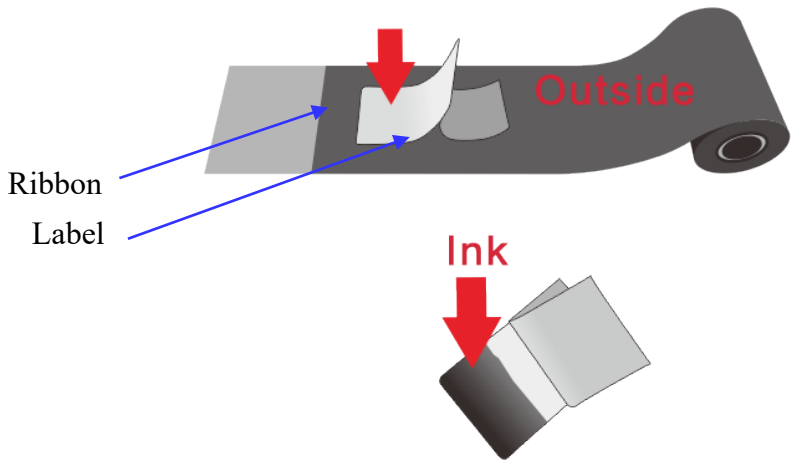


Figure 2-9 Check Ink Side

4. Place the ribbon roll on the Ribbon Supply Spindle, see Figure 2-10. Make sure that the ribbon roll is firmly pushed against the Stop Plate.

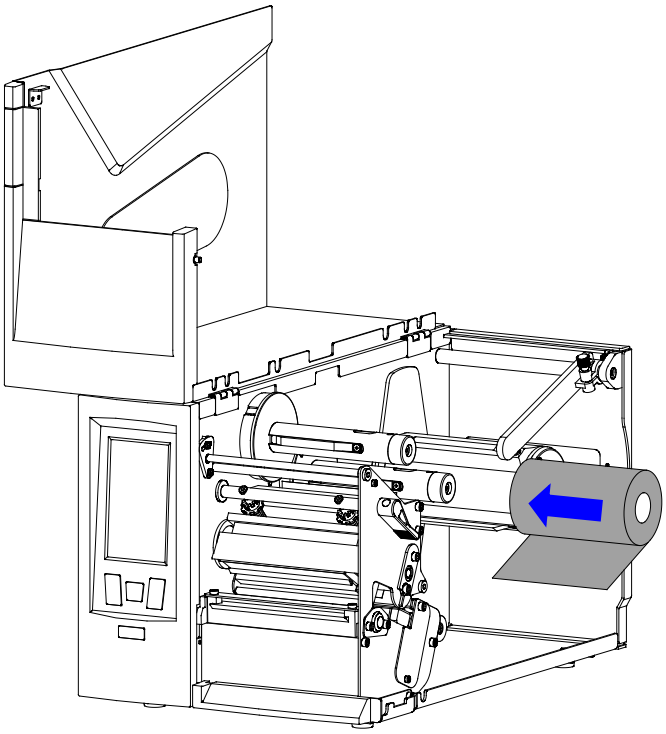

Figure 2-10 Load Ribbon Roll

5. Follow the ribbon path indicated in Figure 2-4, thread the ribbon under the Ribbon Guide Rod and pass the Printhead Assembly, make sure that the ribbon's ink side is facing the media. See Figure 2-11.

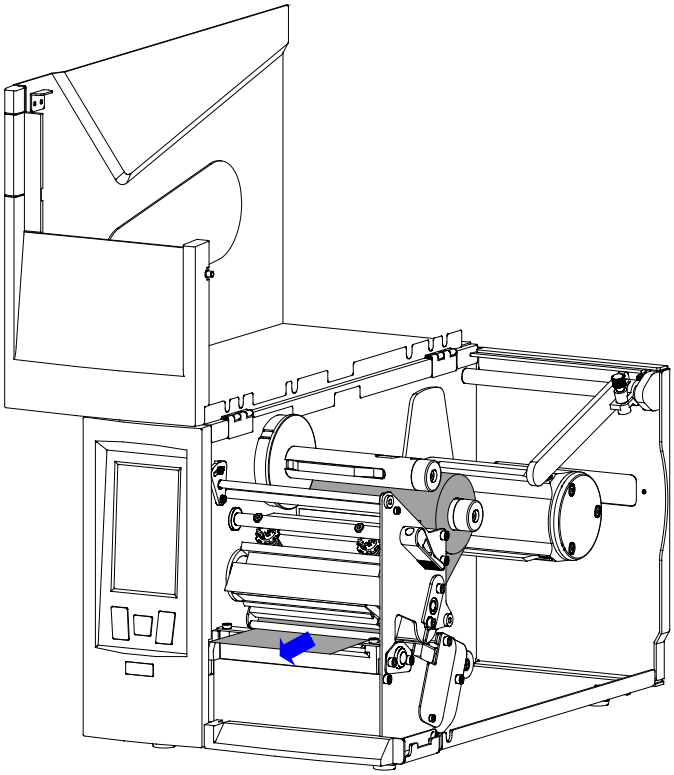

Figure 2-11 Thread Ribbon through Printhead Assembly

6. Wrap the ribbon around a spare ribbon core to form a Ribbon Take-up Roll. See Figure 2-12.

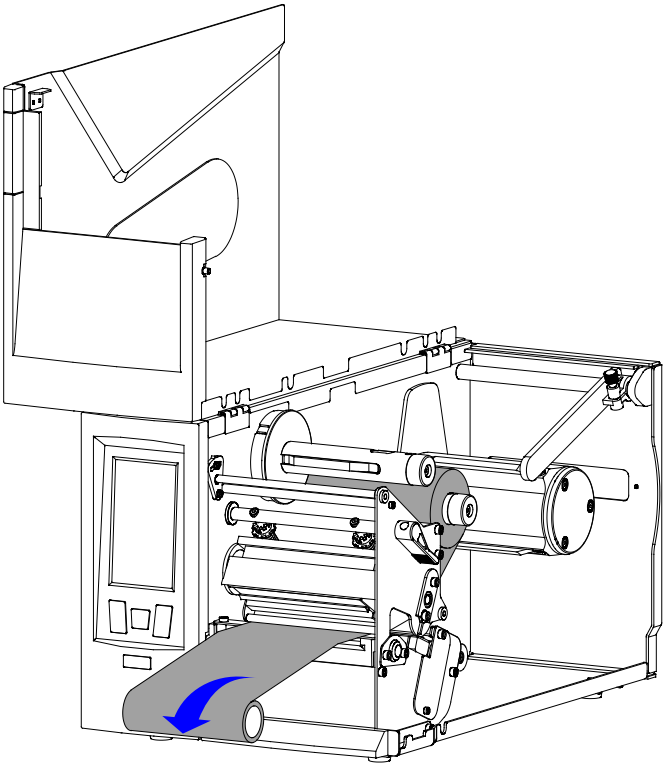

Figure 2-12 Wrap Ribbon on the Core

7. Slide the Ribbon Take-up Roll on the Ribbon Take-up Spindle and push it firmly against the Stop Plate. Turn the Take-up Spindle until the ribbon is tightly wound. See Figure 2-13.

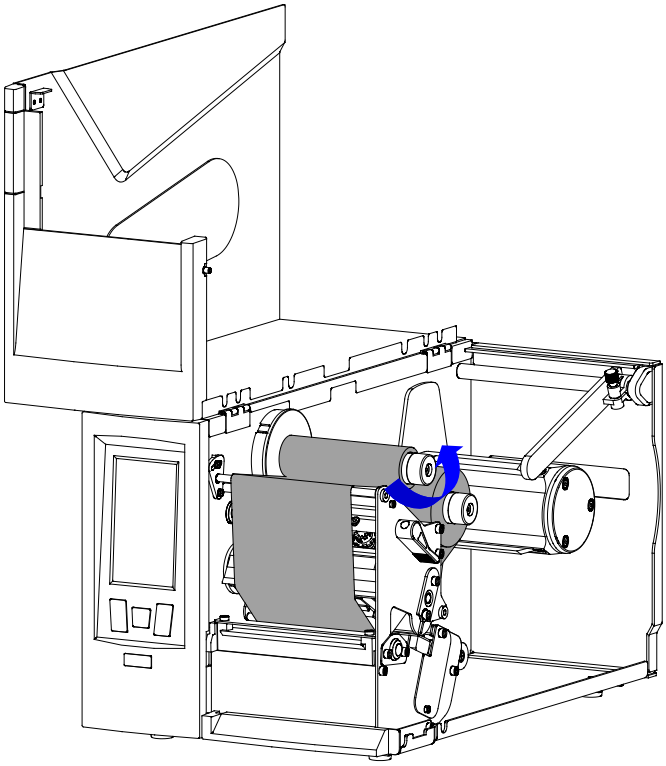

Figure 2-13 Ribbon Roll Loaded

**NOTE**

*To make sure the Ribbon End Sensor works properly, please use ribbon rolls that end with reflective or transparent materials.*

## 2.2.4 Loading the Media

**CAUTION**

- *When it is the first time installing the media or when changing to a different type of media, media sensor calibration must be performed.*
- *No calibration is needed when using continuous media.*

The printer has three different handling modes for printed label: Standard Mode, Tear-off Mode, and Cutter Mode.

- When the handling mode is set to Standard Mode, the printer stops at the leading edge of the next label and goes into standby as soon as the print job is complete.
- When the handling mode is set to Tear-off Mode, after the print job is finished, the printer will feed the label until the gap between the current label and the next label aligns with the Tear-off Bar allowing easy tear off for the user.
- When the handling mode is set to Cutter Mode, the cutter automatically cuts off the label(s) after the printer has completed the print job or printed the set number of labels. (Only available on models with cutter installed).

### 2.2.4.1 Switching Media Core Adapters

**CAUTION**

*The printer is equipped with both 1.5" and 3" media core adapters. The 1.5" core adapter is located inside the 3" core adapter. To load a 1.5" core media roll, please first remove the 3" core adapter; and then adjust the position of the Media Roll Guide Stopper.*

Steps to switch to the 1.5″ core adapter:

1. Remove the 3″ core adapter. Refer to Figure 2-14. Use the Allen wrench bundled with the printer to remove the screw securing the 3″ core adapter, and then slide the 3″ core adapter out to remove it from the printer.

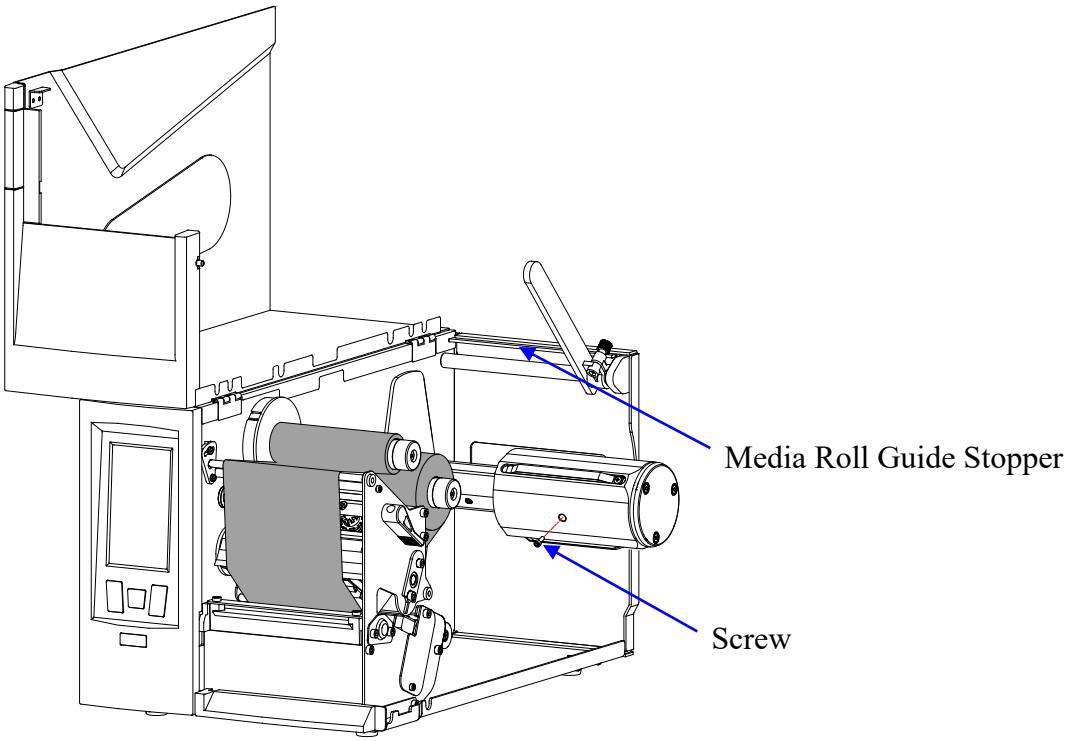


Figure 2-14 Remove the 3″ Core Adapter

2. Adjust the position of the Media Roll Guide Stopper. Refer to Figure 2-15. Loosen (do not remove) the two screws securing the Media Roll Guide Stopper, and then move the Media Roll Guide Stopper upwards until it's stopped, and then fasten the two screws. This will give the media roll guide more room to rotate so as to be able to reach (no touch) the thinner 1.5″ core adapter.

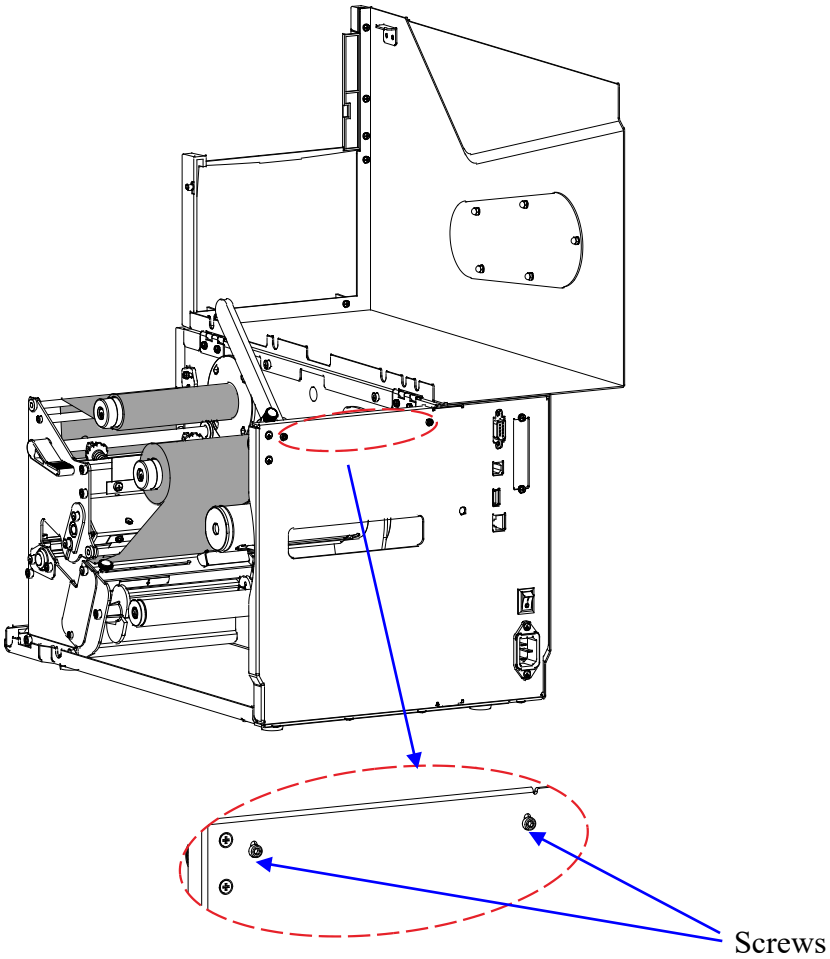


Figure 2-15 Adjust the position of the Media Roll Guide Stopper

**NOTE**

*When switching back to 3" core adapter, make sure to reverse the Media Roll Guide Stopper position adjustment process and move the Media Roll Guide Stopper back to its lower position.*

### 2.2.4.2 Tear-off Mode

**CAUTION**

- *Tear-off Mode is the default handling mode.*
- *The media installation procedure in Standard Mode is the same as in Tear-off Mode.*

To load media into the printer while under Tear-off Mode, follow the steps below:

1. Loosen the Thumbscrew, then slide the Media Roll Guide to the far right end and lift it up. As shown in Figure 2-16.

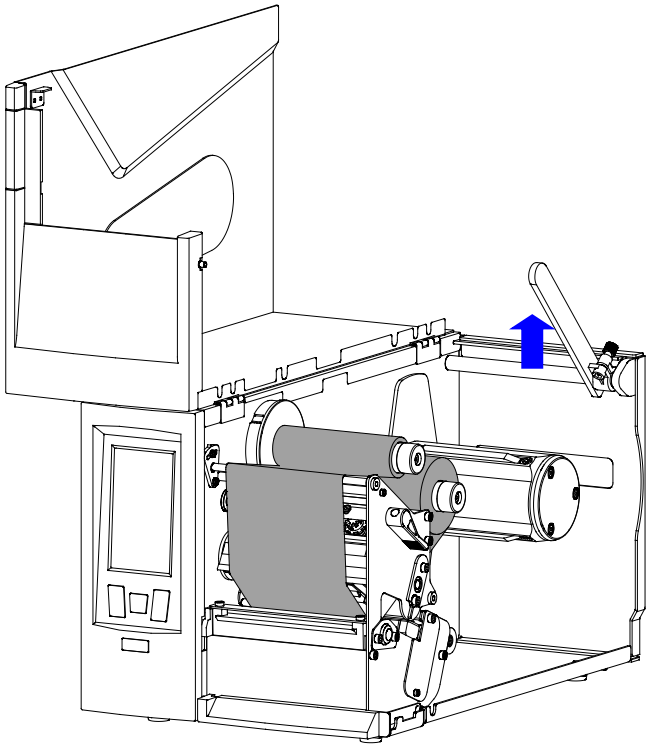

Figure 2-16 Lift the Media Roll Guide

2. Load a media roll onto the Media Spindle, make sure that the media roll is firmly pushed against the Stop Plate. As shown in Figure 2-17.

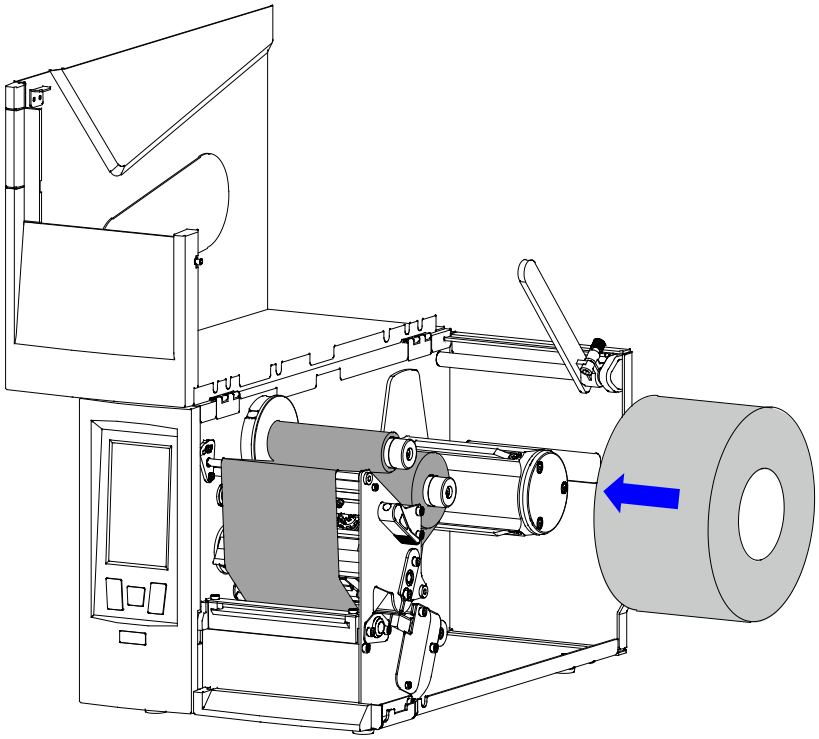

Figure 2-17 Load the Media Roll

3. Press down and adjust the Media Roll Guide by pushing it slightly against the outside edge of the media roll. Tighten the Thumbscrew to lock the Media Roll Guide in place. As shown in Figure 2-18.

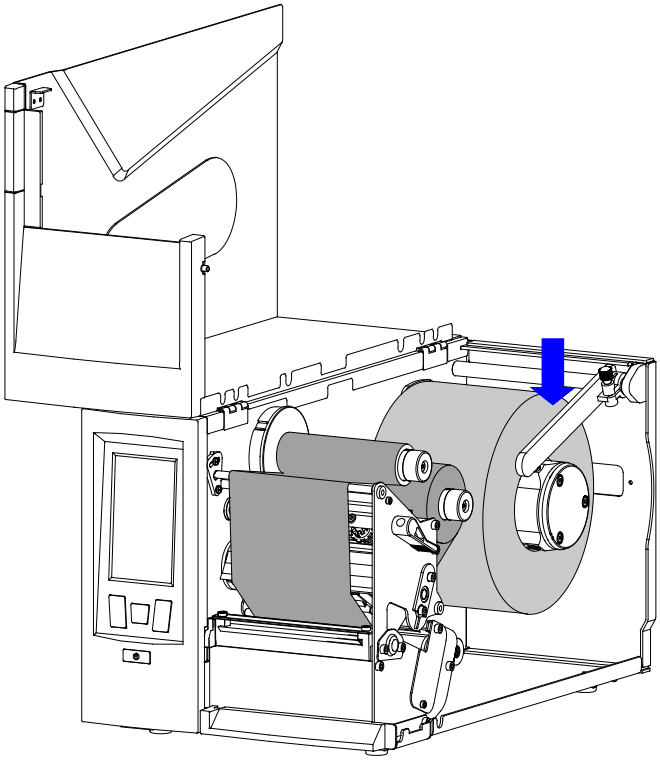

Figure 2-18 Adjust the Media Roll Guide

4. Thread the media along the Media Path as shown in Figure 2-4, loaded media is shown in Figure 2-19.

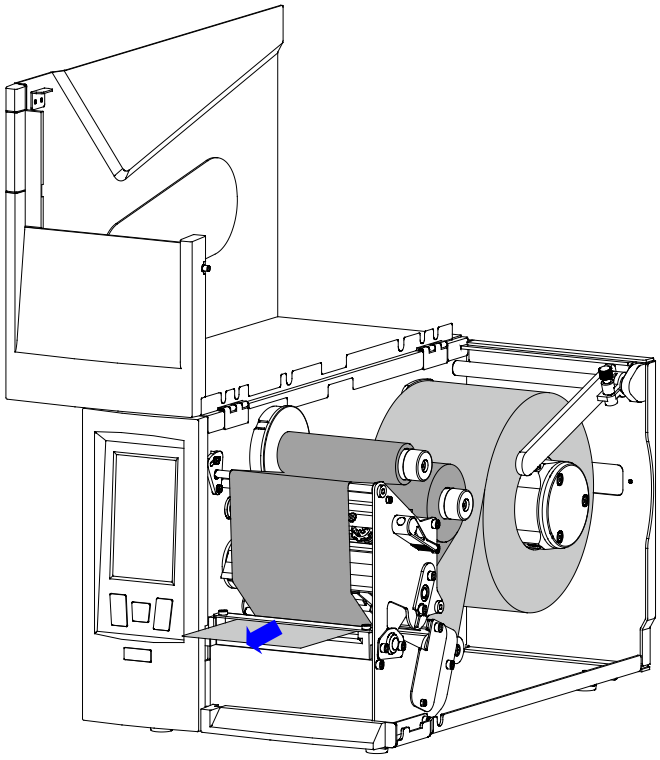

Figure 2-19 Thread the Media

5. Slide the Media Guide to the edge of the media, making sure not to pinch or squeeze the media; keep the media flat and smooth. As shown in Figure 2-20.

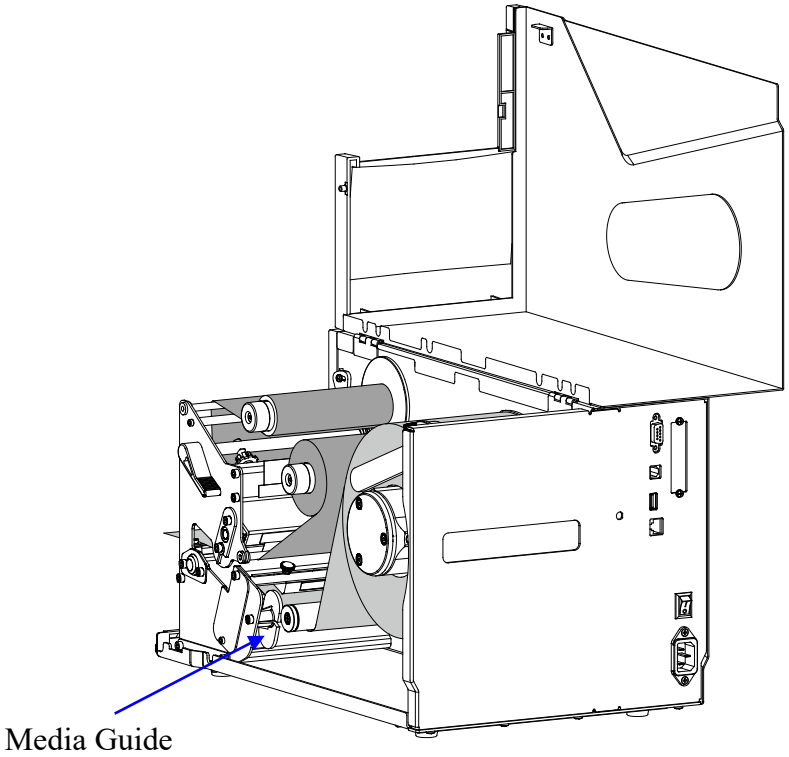


Figure 2-20 Slide the Media Guide

6. Adjust the media sensor. See 3.4.1 Adjusting the Media Sensor.
7. Turn the Lever clockwise to lock the Printhead in place. As shown in Figure 2-21.

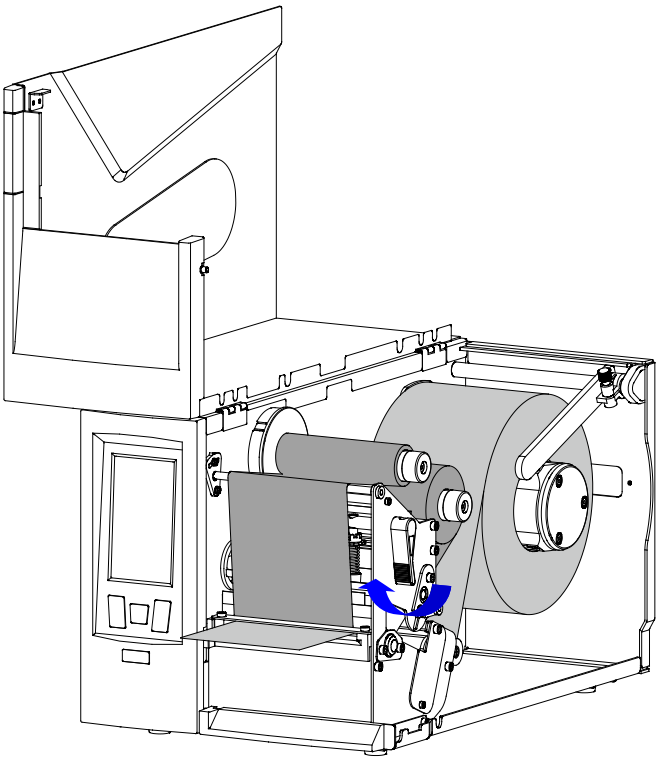

Figure 2-21 Lock the Printhead

8. Turn on the printer and wait for the printer to boot normally., then calibrate the media sensor.

   **NOTE**

   *You can choose to calibrate the media sensor manually (press and hold the [FEED/Calibration] button for around 4 seconds) or automatically (refer to 3.2.1.5 Calibration & Registration).*

9. Close the flip-up cover. Enter the LCD touchscreen settings menu, and set the printed label handling mode to Tear-off Mode (please refer to 3.2.1.7 Printed Label Handling). As shown in Figure 2-22.

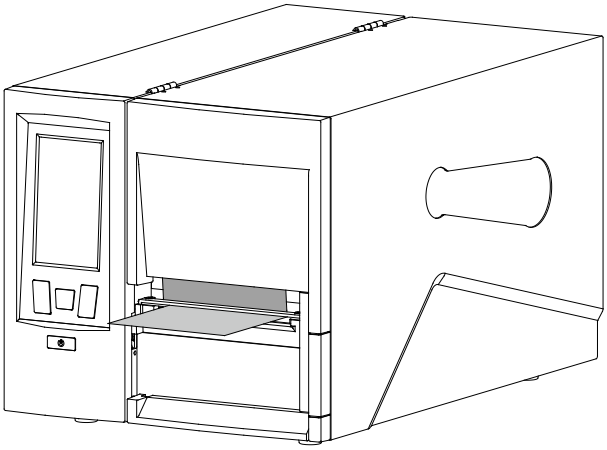

Figure 2-22 Close the Flip-up Cover

### 2.2.4.3 Cutter Mode (Cutter accessory required)

To load media into the printer while under Cutter Mode, follow the steps below:

1. Load a media roll onto the media spindle, please refer to steps 1 ~ 3 2.2.4.2 Tear-off Mode.
2. Refer to the Media Path as shown in Figure 2-5. Thread the media through the opening on the cutter as shown in Figure 2-23.

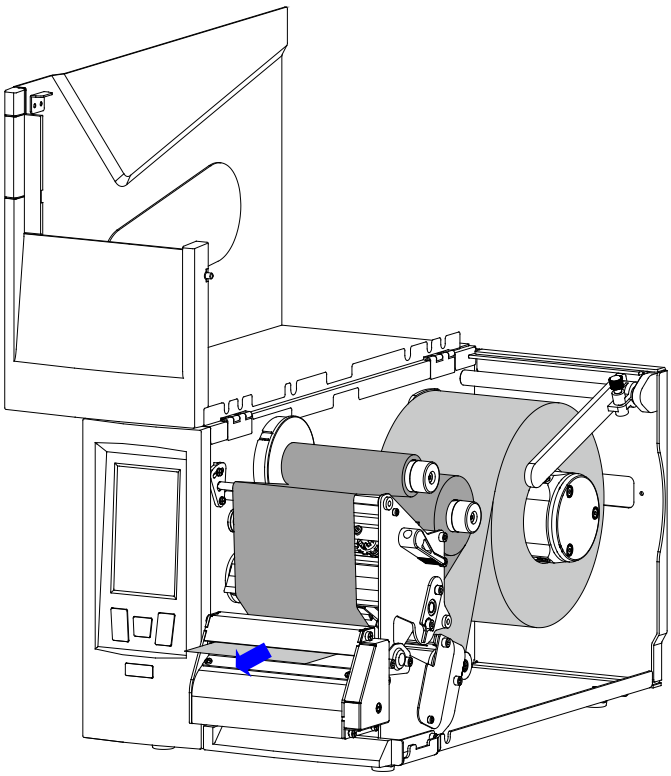

Figure 2-23 Load the Media

3. Slide the Media Guide to the edge of the media, making sure not to pinch or squeeze the media; keep the media flat and smooth. As shown in Figure 2-24.

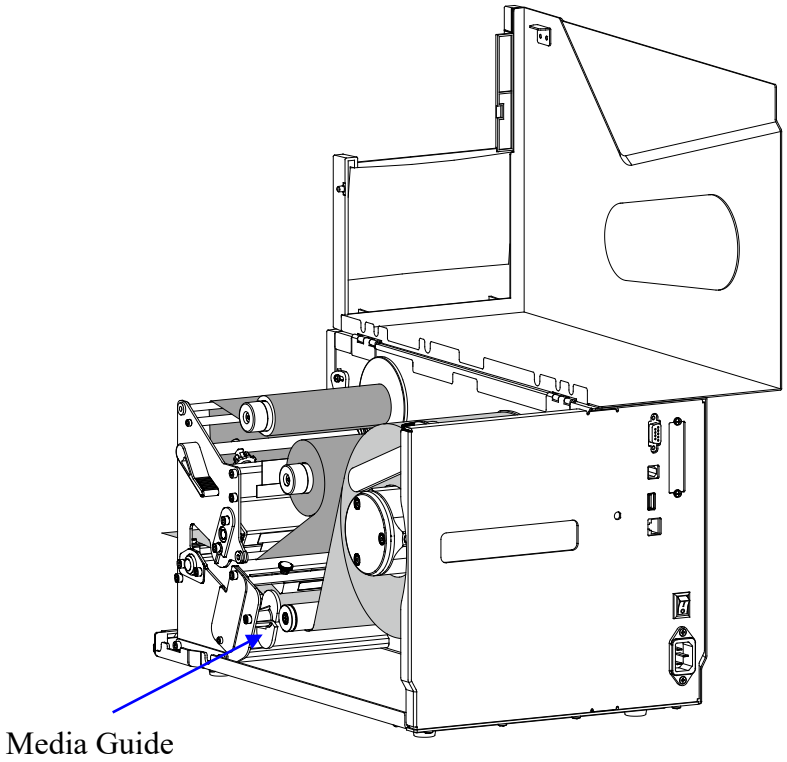


Figure 2-24 Slide the Media Guide

4. Adjust the media sensor. See 3.4.1 Adjusting the Media Sensor.
5. Turn the Lever clockwise to lock the Printhead in place, as shown in Figure 2-25.

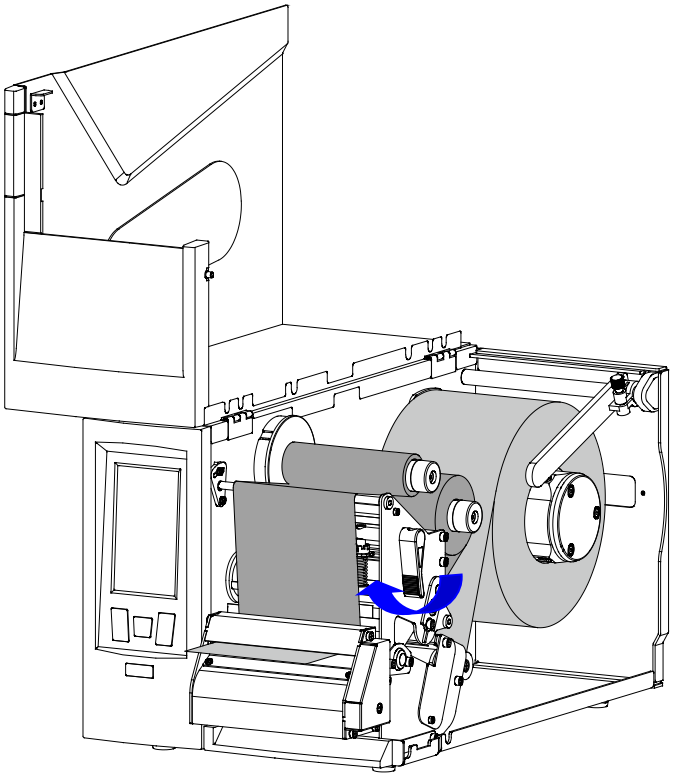

Figure 2-25 Lock the Printhead

6. Turn on the printer and wait for the printer to boot normally, then calibrate the media sensor.

NOTE

*You can choose to calibrate the media sensor manually (press and hold the [FEED/Calibration] button for around 4 seconds) or automatically (refer to 3.2.1.5 Calibration & registration).*

7. Close the flip-up cover. Enter the LCD touchscreen settings menu, and set the printed label handling mode to Cutter Mode (please refer to 3.2.1.7 Printed Label Handling). As shown in Figure 2-26.

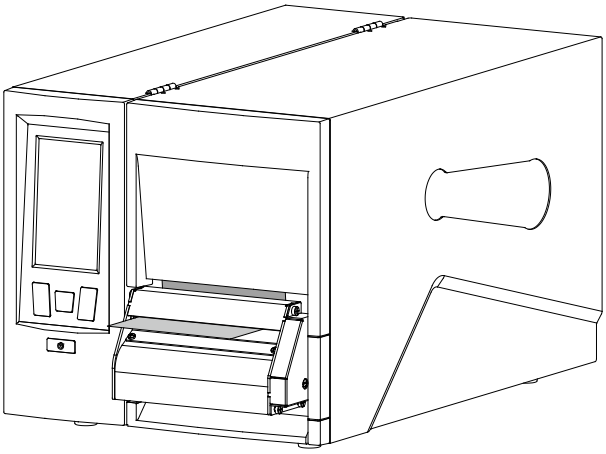

Figure 2-26 Close the Flip-up Cover

# 2.3 Installing the Printer Driver

## 2.3.1 USB Port Installation

**CAUTION**

*If you already have a POSTEK printer driver installed on your computer, the printer driver for the additional printer will be installed automatically.*

When installing the POSTEK printer driver for the first time, if you connect the printer to your computer via the USB port, please refer to the steps below to complete the printer driver installation (take Windows10 operating system as an example).

1. Connect the printer to your computer using a USB cord, then power on the printer.
2. Visit the POSTEK website: http://www.postekchina.com and download the printer driver.
3. Double-click the printer driver icon to bring up the "License Agreement" screen. Select "I accept the Items in the license agreement" and click "Next", as shown in Figure 2-27.

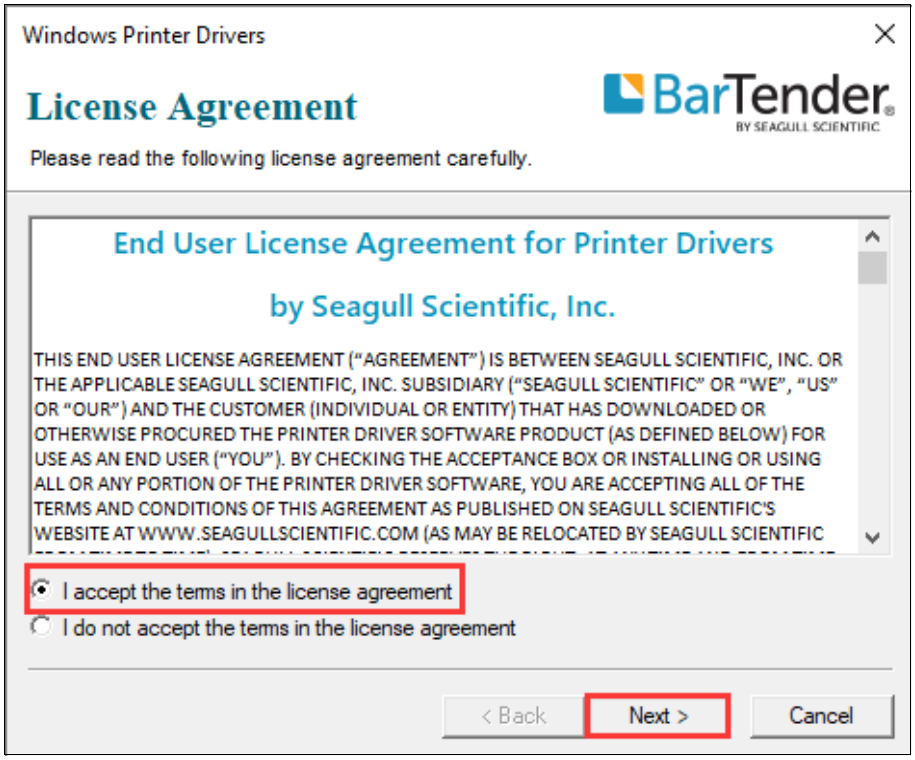


Figure 2-27 License Agreement Screen

4. The "Installation Directory" screen displays. Click "Browse…" and select where the files will be installed, then click "Next", as shown in Figure 2-28.

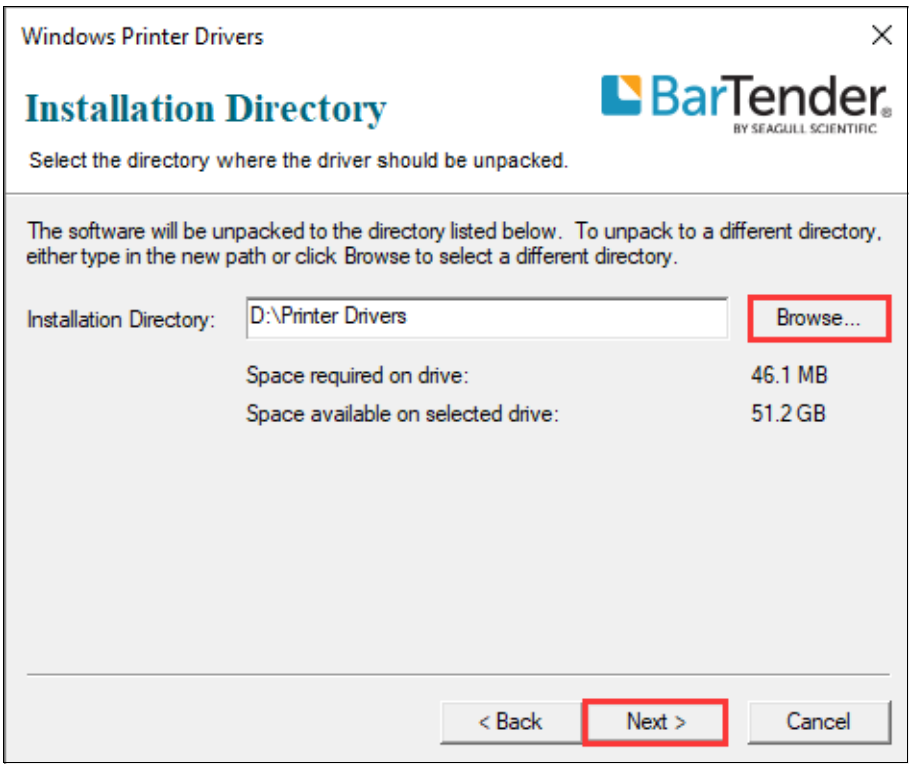


Figure 2-28 Installation Directory Screen

5. On the "Installation Information" screen, check the box that says "Run Driver Wizard after unpacking drivers", then click "Finish", as shown in Figure 2-29.

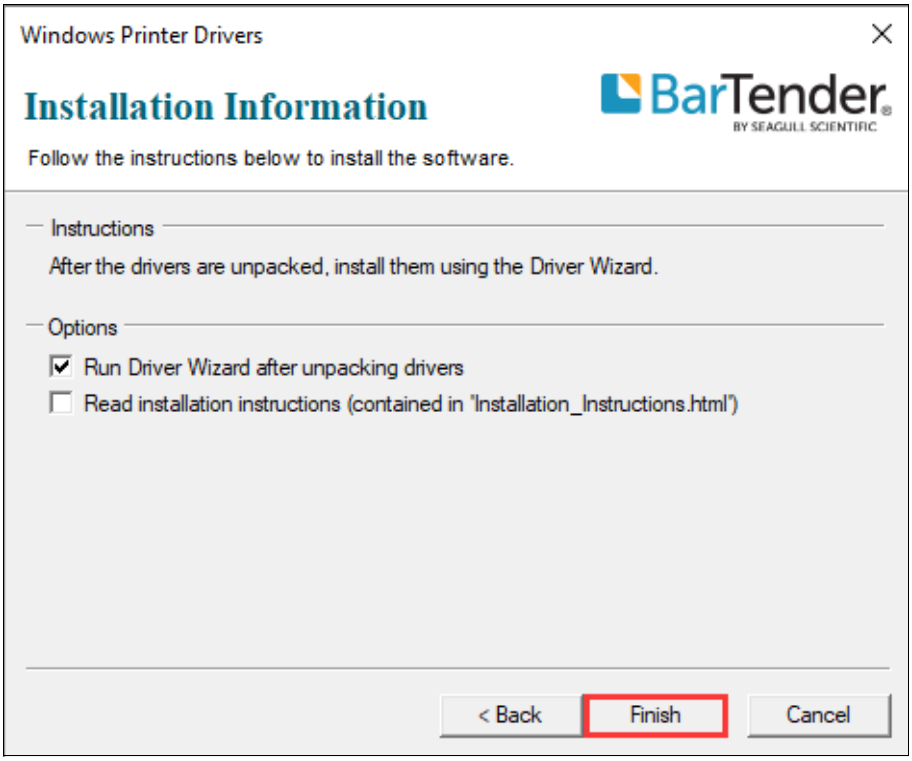


Figure 2-29 Installation Information Screen

6. On the "Seagull Driver Wizard" screen, select "Install printer drivers", and then click "Next", as shown in Figure 2-30.

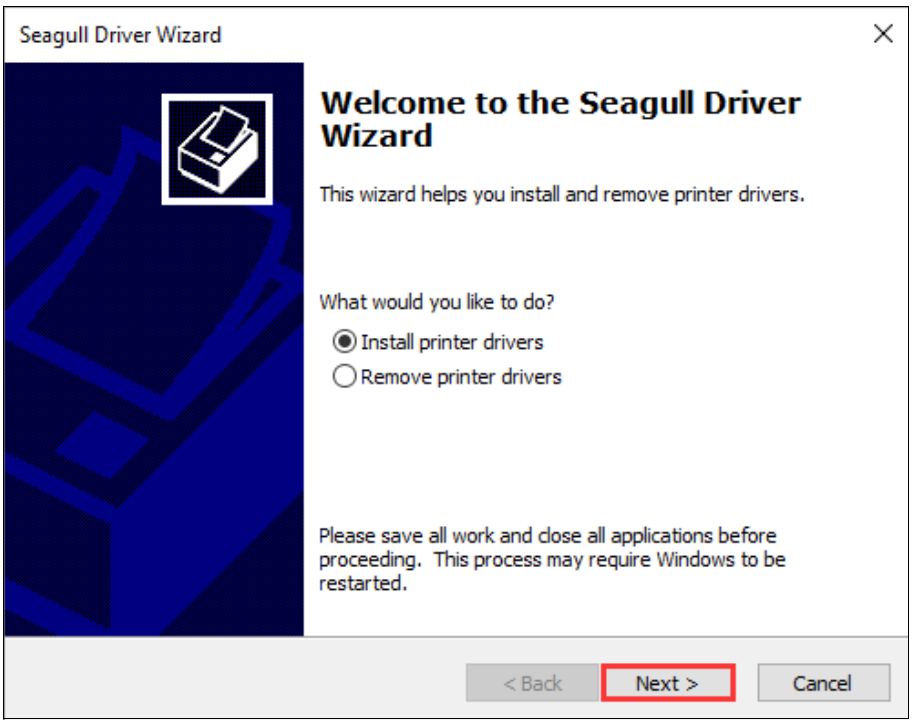


Figure 2-30 Seagull Driver Wizard Screen

7. The connected printer will be detected, click "Next", as shown in Figure 2-31.

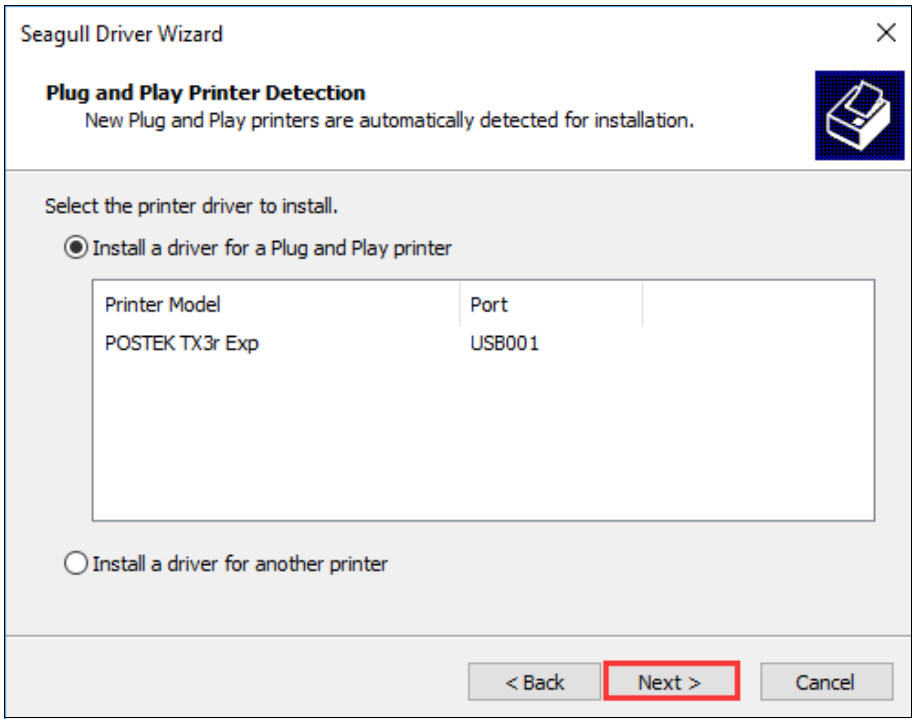


Figure 2-31 Printer Detected

8. On the "Specify Printer Name" screen, enter a name for the printer, as shown in Figure 2-32, then click "Next" to complete the driver installation.

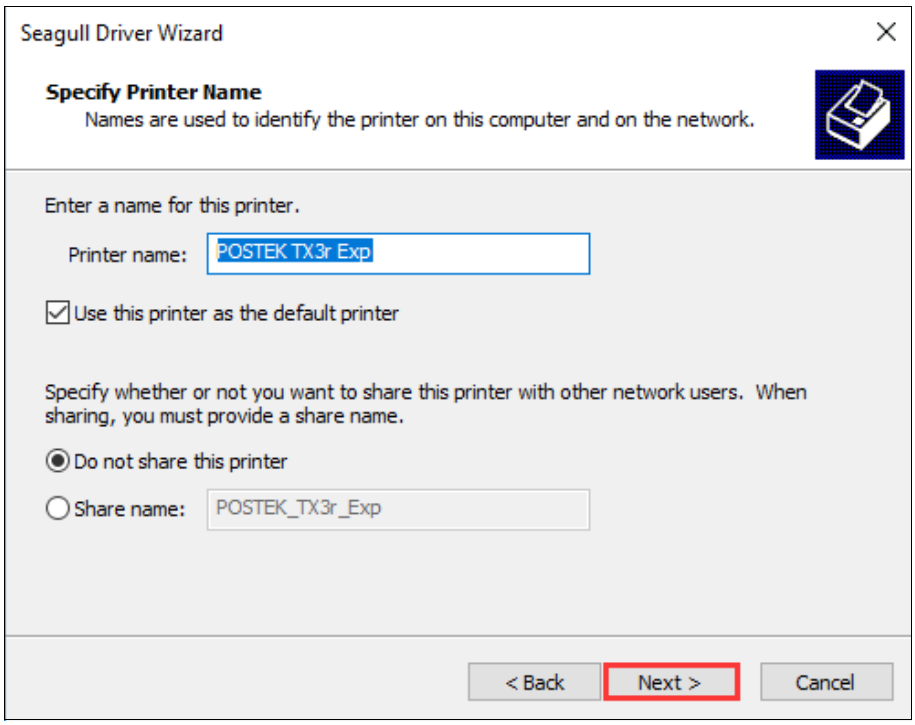


Figure 2-32 Specify Printer Name

9. Print a test page to see whether the printer is connected properly, as shown in Figure 2-33.

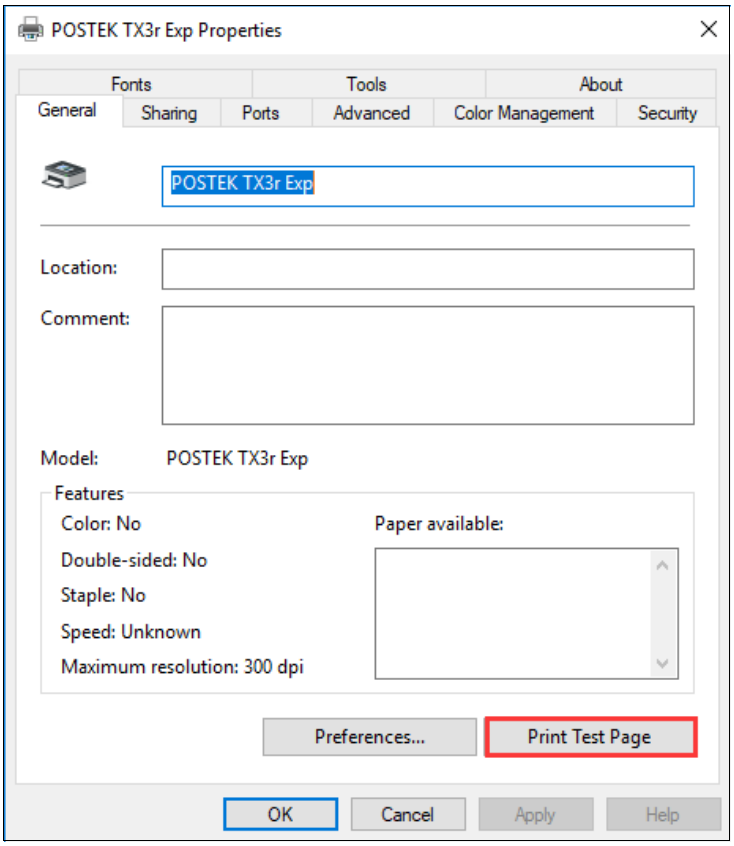


Figure 2-33 Print Test Page

## 2.3.2 Network Port Installation

If you connect the printer to your computer via the Ethernet port, you will need to configure the printer's network parameters before installing the printer driver and configuring the printer's port information.

### 2.3.2.1 Ethernet Configuration

Configure the printer's network parameters via the LCD touchscreen settings menu, and the steps are as follows:

1. Connect the printer and the computer to the same LAN using an Ethernet cable, then power on the printer.
2. Check the LAN information. See Figure 2-34.

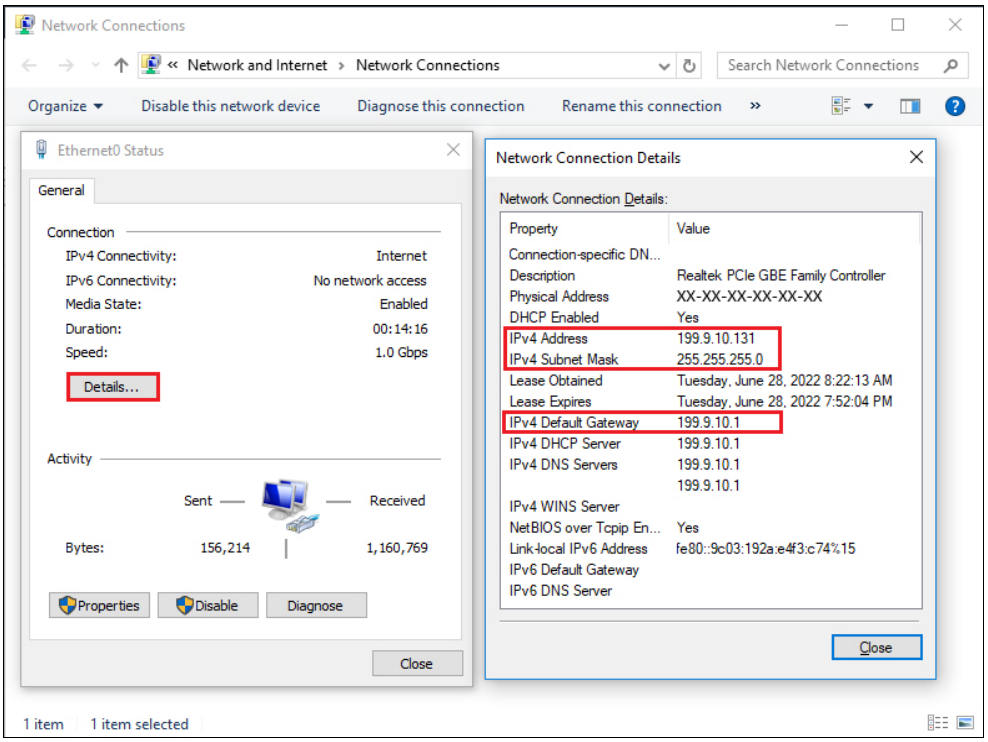


Figure 2-34 Check the LAN Information

3. Enter the LCD touchscreen settings menu and set the network related parameters, see 3.2.2.2 Ethernet.

### 2.3.2.2 Driver Installation and Port Configuration

After the printer's network parameters have been configured, please refer to the following steps to complete the driver installation and port configuration.

1. Visit the POSTEK website: http://www.postekchina.com and download the printer driver.
2. Double-click the printer driver icon, follow the prompted screen to extract the driver installer and run the driver installation wizard (for details, please refer to Steps 3~6 in 2.3.1 USB Port Installation).
3. On the "Connect Printer" screen, select "Network (Ethernet or WiFi)", and then click "Next", as shown in Figure 2-35.

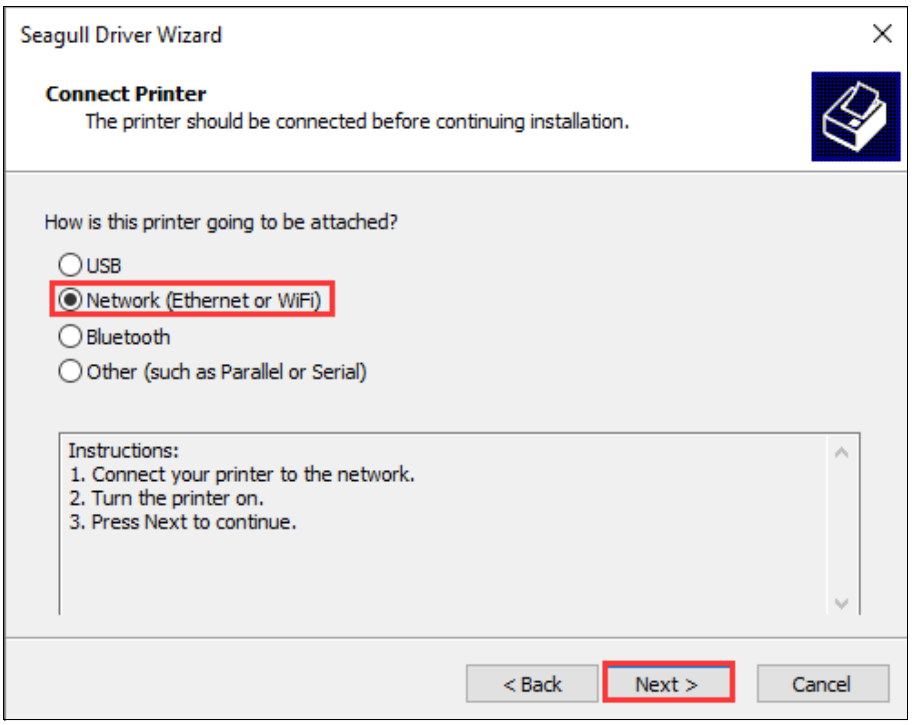


Figure 2-35 Connect Printer Screen

4. The "Specify Printer Model" screen displays, select the printer model, and click "Next", as shown in Figure 2-36.

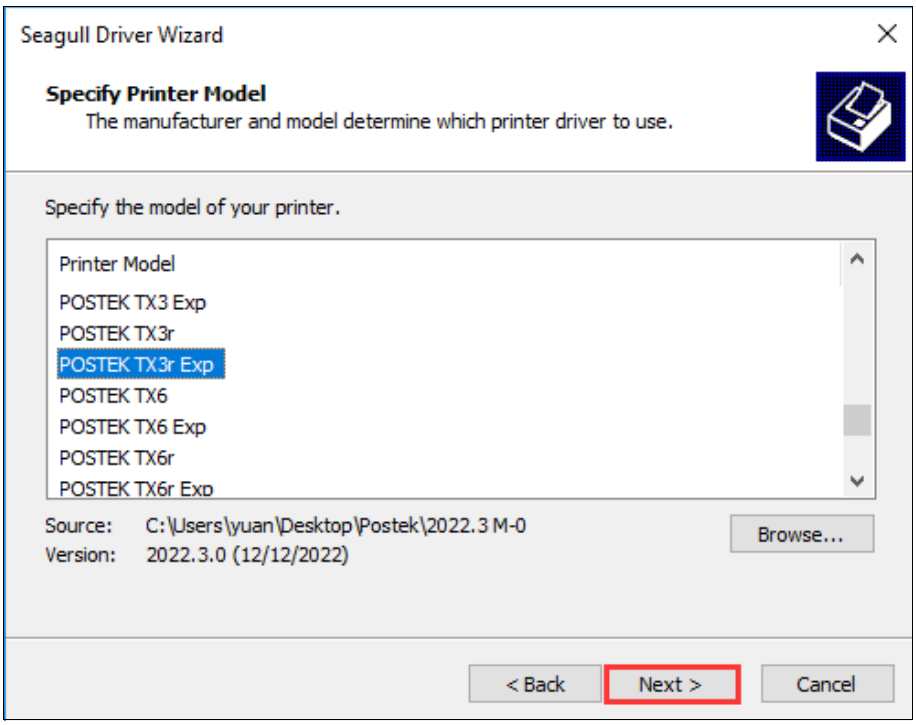


Figure 2-36 Specify Printer Model Screen

5. On the "Specify Port" screen, click "Create Port…" to bring up "Create Port" dialog box, select "Standard TCP/IP Port" - "New Port…", as shown in Figure 2-37.

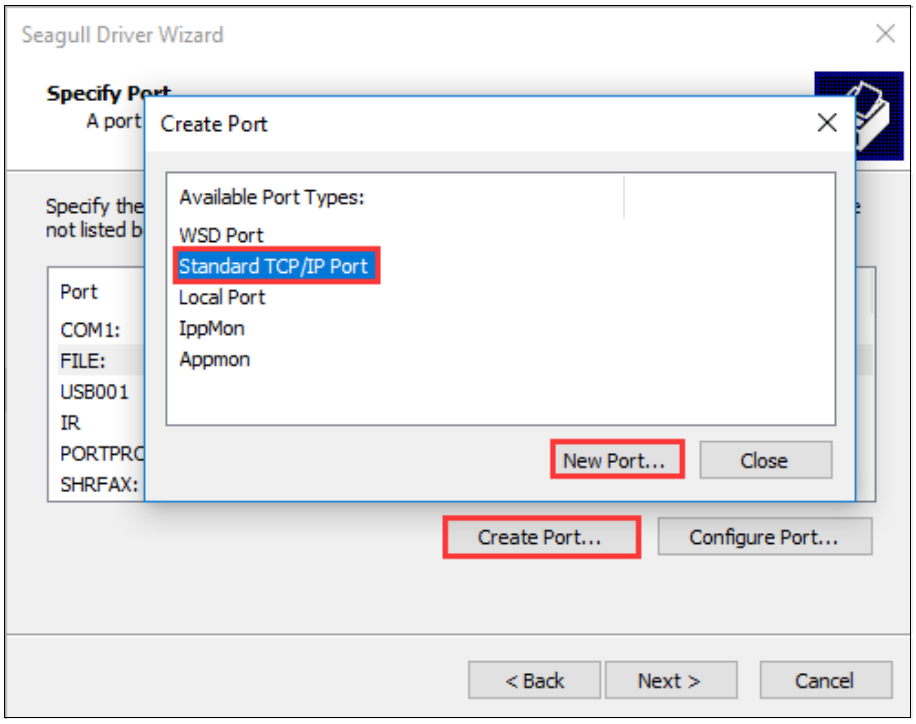


Figure 2-37 Create Port

6. The "Add Standard TCP/IP Printer Port Wizard" screen displays, click "Next", as shown in Figure 2-38.

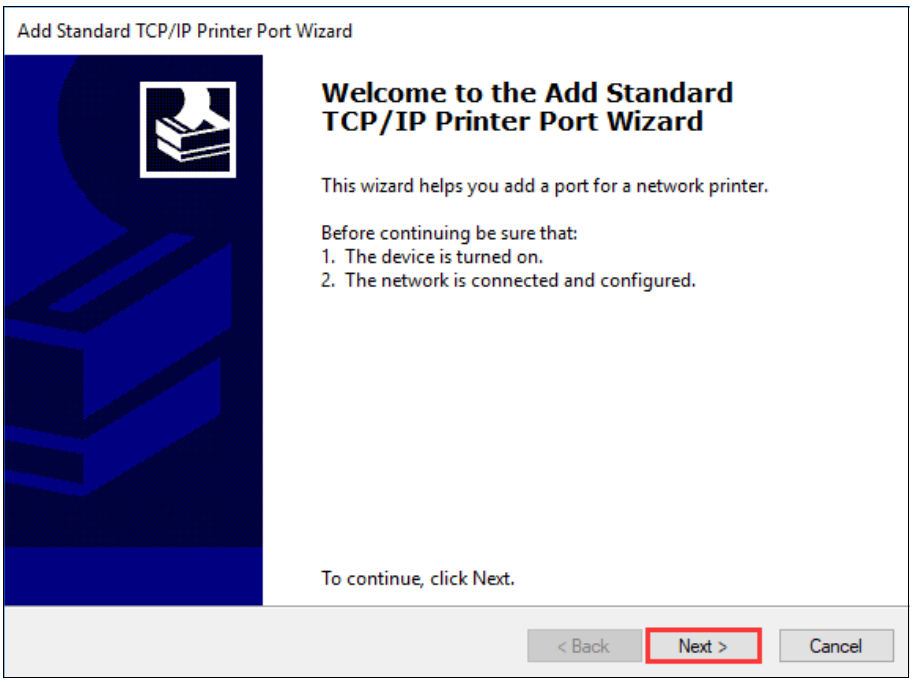


Figure 2-38 Add Standard TCP/IP Printer Port Wizard

7. On the "Add Port" screen, enter the IP Address of the printer (Note: the IP address here must be consistent with the IP address of the printer that has been set, and the port name will be generated automatically), and then click "Next", as shown in Figure 2-39.

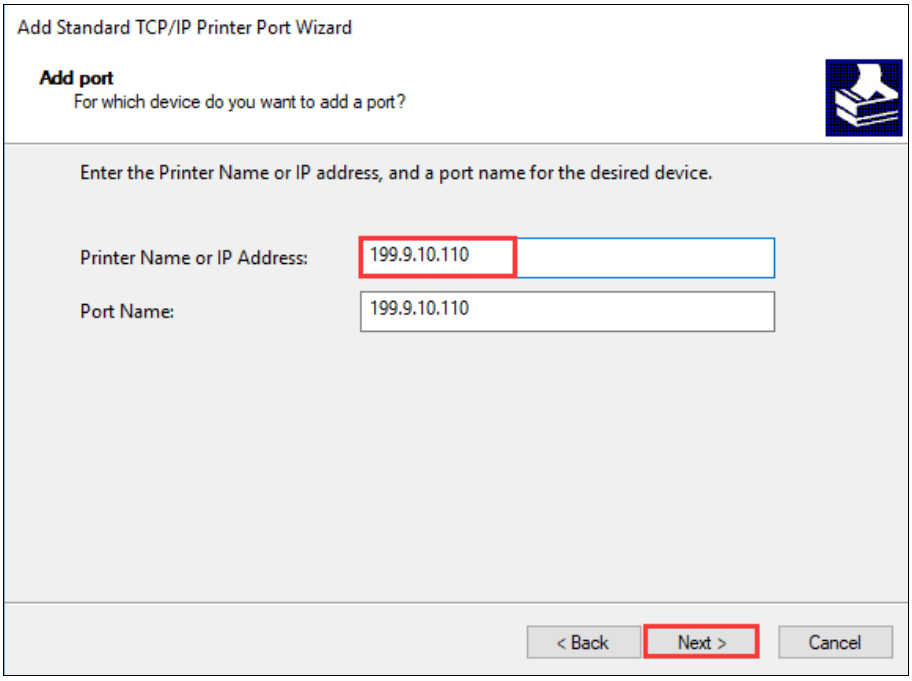


Figure 2-39 Add Port Screen

8. Windows will automatically detect the TCP/IP port. Click "Finish" to complete adding Standard TCP/IP Printer Port, as shown in Figure 2-40.

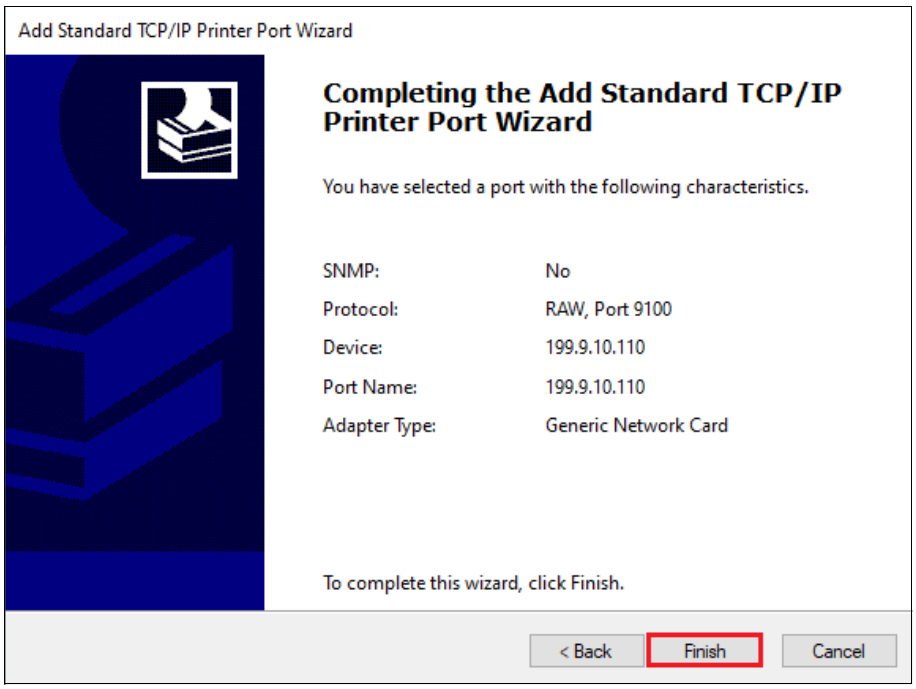


Figure 2-40 Complete adding Standard TCP/IP Printer Port

9. Return to the "Specify Port" screen, select the TCP/IP Port that has been added, and click "Next", as shown in Figure 2-41.

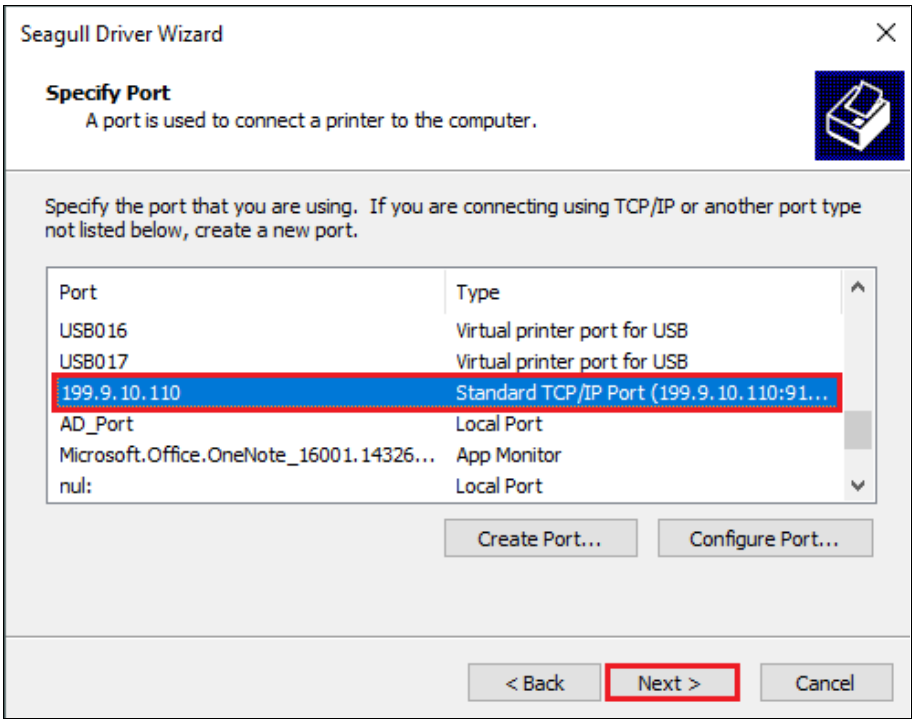


Figure 2-41 Specify Port Screen

10. On the "Specify Printer Name" screen, enter a name for the printer, as shown in Figure 2-42. Click "Next" to complete the driver installation.

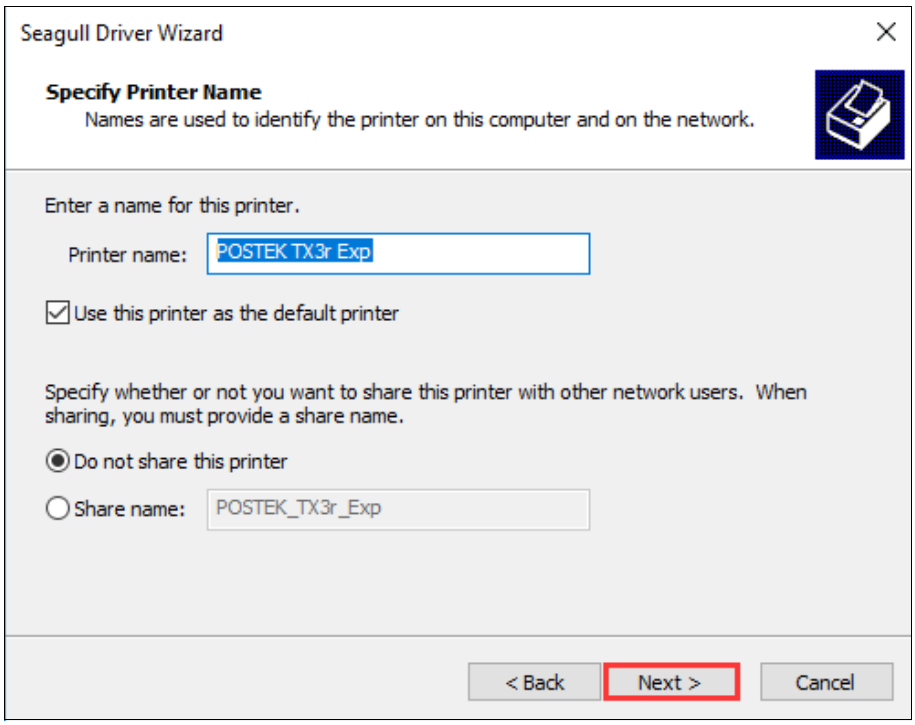


Figure 2-42 Specify Printer Name

11. Print a test page to see whether the printer is connected properly. As shown in Figure 2-43.

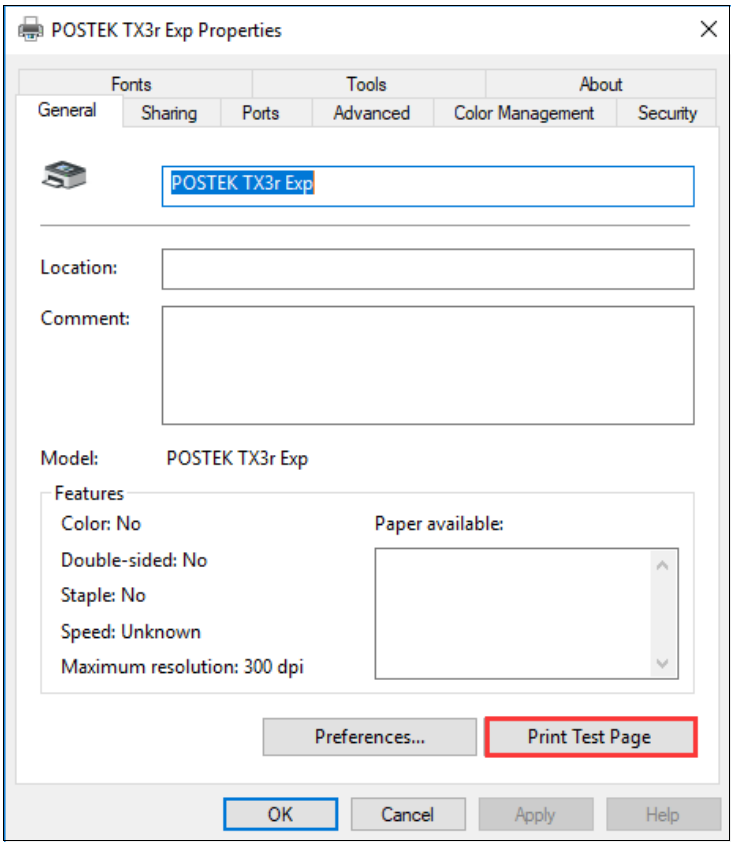


Figure 2-43 Print Test Page

## 2.4 Installing Label Editing Software

Each printer also comes with a BarTender UltraLite edition software. To access to the software and the directions for use, please scan the QR code on the Quick Start Guide or visit POSTEK website: http://www.postekchina.com.

# Chapter 3: Operations and Settings

## 3.1 The Front Panel

The Front Panel of the printer consists of:

- Three multi-function buttons: [PAUSE/Self Test], [FEED/Calibration], and [CANCEL/Reset]
- One status indicator
- One 4.5″ LCD Capacitive Touchscreen

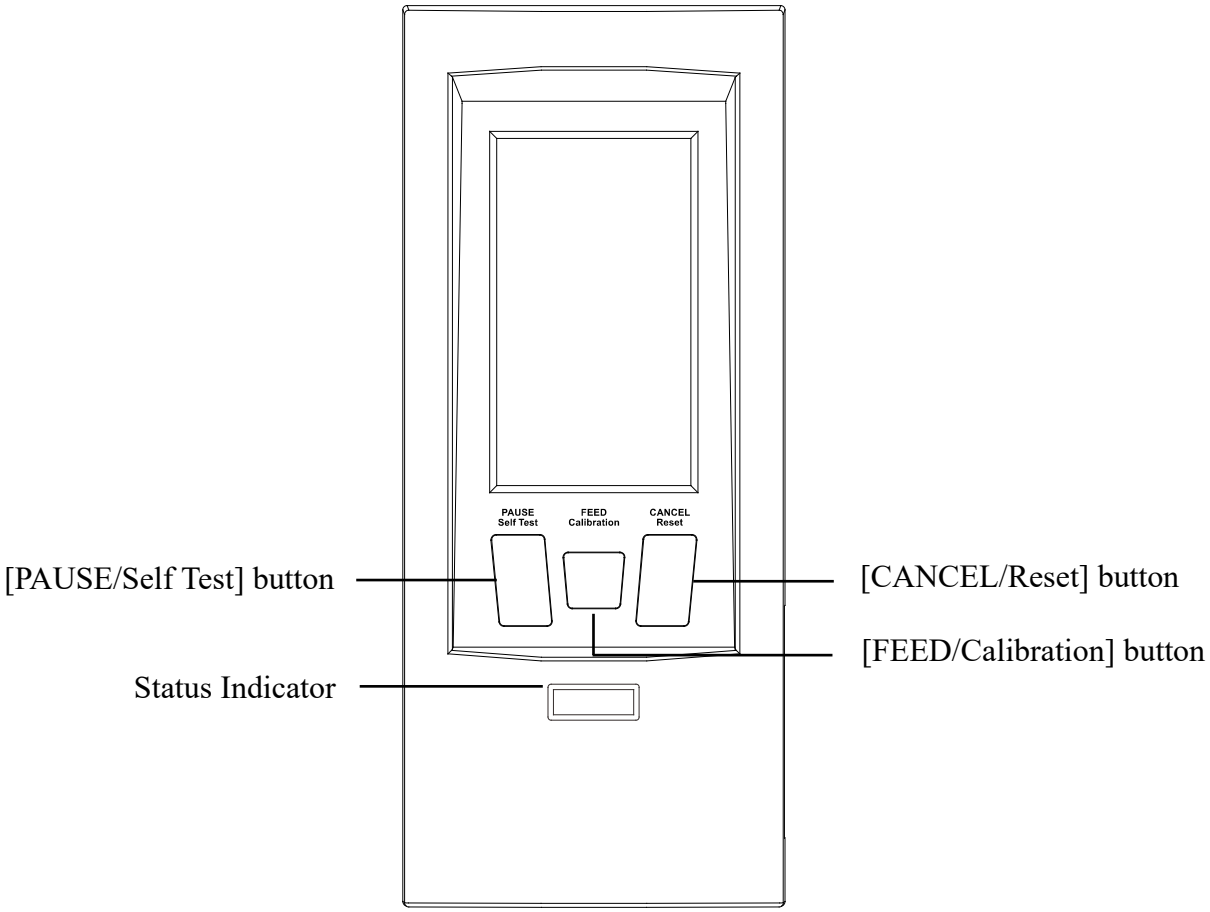


Figure 3-1 Front Panel

### 3.1.1 Panel Buttons

The three buttons have different functions based on the mode of the operation is performed, please refer to Table 3-1 for details.

Table 3-1 Panel Button Description

| Button | Function |
|---|---|
| [PAUSE/Self Test] | • When the printer is in working or standby state, press once to pause the printer.<br>• When the printer is in pause state, press once to resume.<br>• When the printer is in a standby state, press and hold the button for around 4 seconds, the printer will print a self-test report. |
| [FEED/Calibration] | • When the printer is in a standby state, press once and the printer will feed one label.<br>• When the printer is in a standby state, press and hold the button for around 4 seconds, the printer will automatically feed labels and the media sensor calibration is performed. |
| [CANCEL/Reset] | • When the printer is in error, and there is no print job in process, press once and the printer enters the standby state.<br>• When the printer is in standby, press and hold the button for around 4 seconds to enter the Reset settings menu. |

### 3.1.2 Status Indicator

The lighting patterns of the status indicator show the various operating states of the printer, please refer to Table 3-2 for details.

Table 3-2 Indicator Description

| Indicator | Printer Status |
|---|---|
| White solid | Printer is in ready or initialization state |
| White breathing | Printer in hibernation |
| White blinking | Upgrade in progress |
| Blue solid | Working state |
| Blue blinking | Pause state |
| Blue blinking quickly | Cancelling print job |
| Red blinking | Printer in error |

### 3.1.3 LCD Touchscreen

The front panel of the printer contains a 4.5″ LCD capacitive touchscreen. Settings can be easily configured on the touchscreen. The main screen is shown in Figure 3-2.

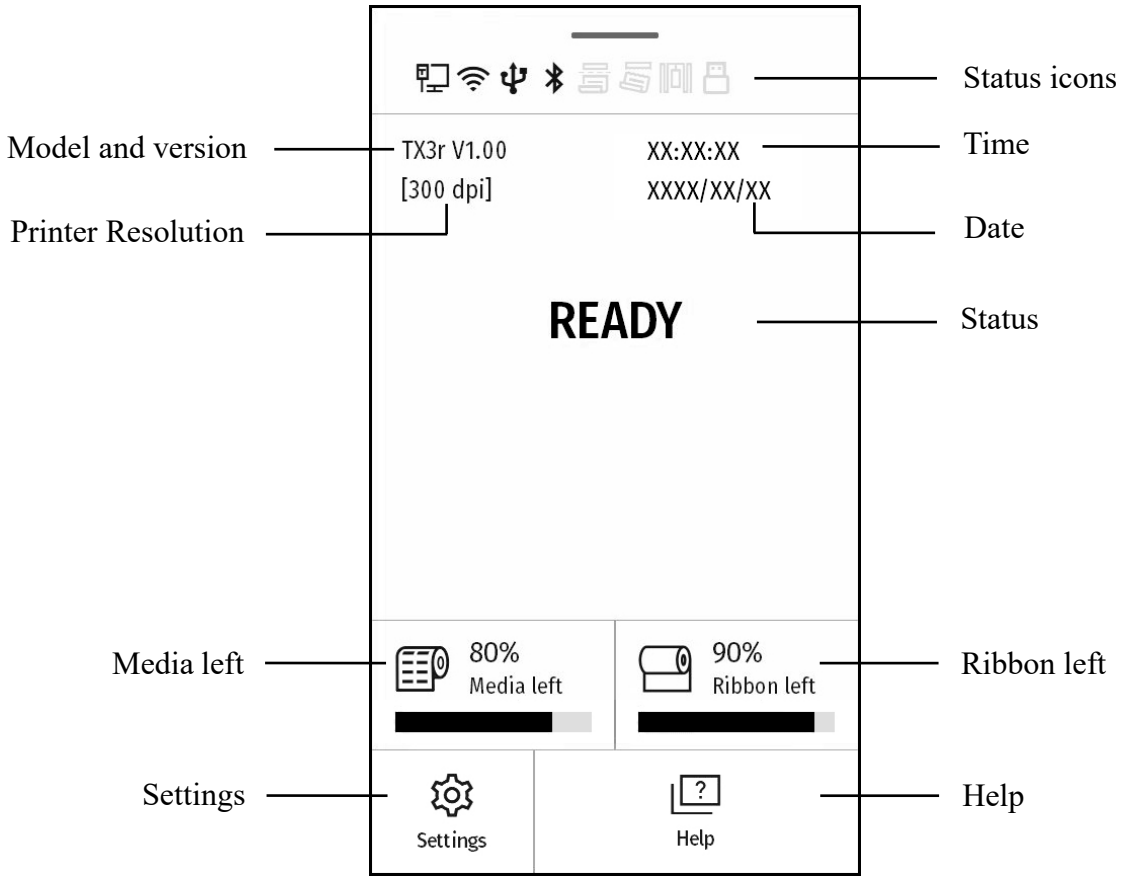


Figure 3-2 Main Screen

For a detailed description of the status icons, see Table 3-3.

Table 3-3 Status Icon Description

| Icons | Description | Icons | Description |
|---|---|---|---|
| | Network is connected | | Network is not connected |
| | WiFi is connected | | WiFi is not connected |
| | USB is connected | | USB is not connected |
| | Bluetooth is connected | | Bluetooth is not connected |
| | Cutter mode on | | Cutter mode off |
| | Tear-off mode on | | Tear-off mode off |
| | RFID function on | | RFID function off |
| | USB device is connected | | USB device is not connected |

# 3.2 Settings

## 3.2.1 General Settings

### 3.2.1.1 Darkness

On the LCD touchscreen, select "Settings" > "General" > "Darkness" to enter the Darkness menu, as shown in Figure 3-3.

Figure 3-3 Darkness Menu

Set the print darkness from this menu. (*Note: Too high the print darkness may result in poor print quality.*). The print darkness defaults to the value sent by print command or printer driver, if you want to use the menu settings, please uncheck the box "Use the value sent by print command or print driver".
***Accepted values**: 0.0 to 30.0*

### 3.2.1.2 Speed

On the LCD touchscreen, select "Settings" > "General" > "Speed" to enter the Speed menu, as shown in Figure 3-4.

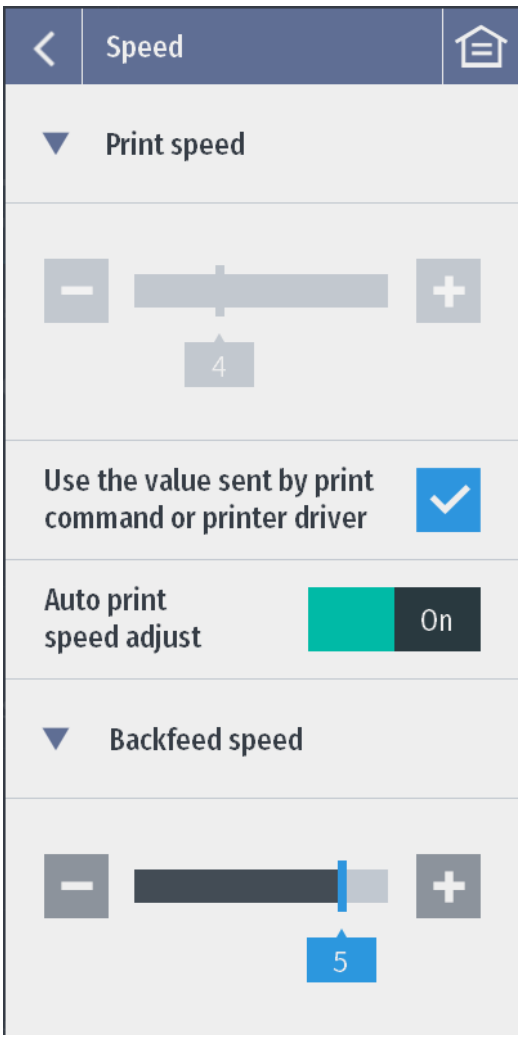


Figure 3-4 Speed Menu

Set the print speed and backfeed speed from this menu. Speed unit: ips (inches per speed).

**Print speed**: Set the print speed. (*Note: Slower print speed typically yields better print quality.*)

The print speed defaults to the value sent by print command or printer driver, if you want to use the menu settings, please uncheck the box "Use the value sent by print command or print driver".

***Accepted values***: *0.5, 1 to 16 (for 203dpi models)*
*0.5, 1 to 12 (for 300dpi models)*
*0.5, 1 to 6 (for 600dpi models)*

***Default value***: *4*

**Auto print speed adjust**: Set the Automatic Adjustment of the Print Speed on or off.

Due to low ambient temperature, the darkness level you have chosen may not be achievable at the currently selected print speed. The printer will either decrease the print speed or lower the darkness level to start printing. The printhead temperature may increase as a result of continuous printing. If Auto Print Speed Adjust is on, the printer may decrease the print speed to start. As the printhead temperature increases during continuous printing, the printer would automatically increase the print speed until the print speed reaches the originally selected print speed.

If Auto Print Speed Adjust is turned off, the printer may lower the darkness level to start. As the printhead temperature increases during continuous printing, the printer will automatically increase the print darkness level until the set darkness is reached.

***Note: Different print speeds may result in differences in printing results, so please use this function according to your actual needs.***

**Backfeed speed**: Set the backfeed speed of the label, i.e., the speed at which the label back feed from the tear-off/cutting position to the print position. Low backfeed speed helps get higher print position accuracy.
***Accepted values***: *0.5, 1 to 6*
***Default value***: *2*

### 3.2.1.3 Sensor Type

On the LCD touchscreen, select "Settings" > "General" > "Sensor Type" to enter the Sensor Type menu, as shown in Figure 3-5.

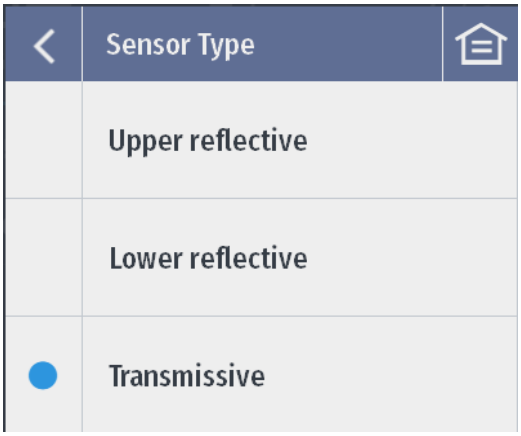


Figure 3-5 Sensor Type Menu

Set the media sensor type from this menu. For labels with a black mark on the surface, choose the upper reflective sensor; for labels with a black mark at the bottom, choose the lower reflective sensor; for gaps, notches and holes, choose the transmissive sensor.
***Accepted values***: *Upper reflective, Lower reflective, Transmissive*
***Default value***: *Transmissive*

### 3.2.1.4 Print Mode

On the LCD touchscreen, select "Settings" > "General" > "Print Mode" to enter the Print Mode menu, as shown in Figure 3-6.

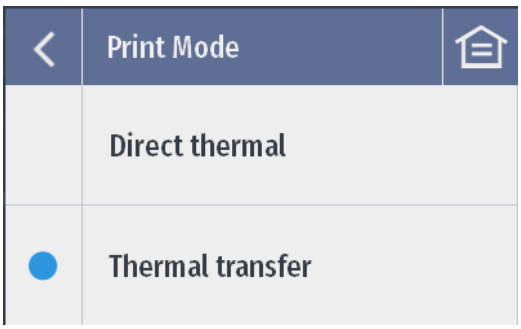


Figure 3-6 Print Mode Menu

Set the print mode from this menu.
***Accepted values***: *Direct thermal, Thermal transfer*
***Default value***: *Thermal transfer*

***Note: If you need to print on Direct Thermal materials (ribbon is not required), please contact your dealer for professional adjustment of the print module to avoid excessive wear of the printhead.***

### 3.2.1.5 Calibration & Registration

On the LCD touchscreen, select "Settings" > "General" > "Calibration & Registration" to enter the Calibration & Registration menu, as shown in Figure 3-7.

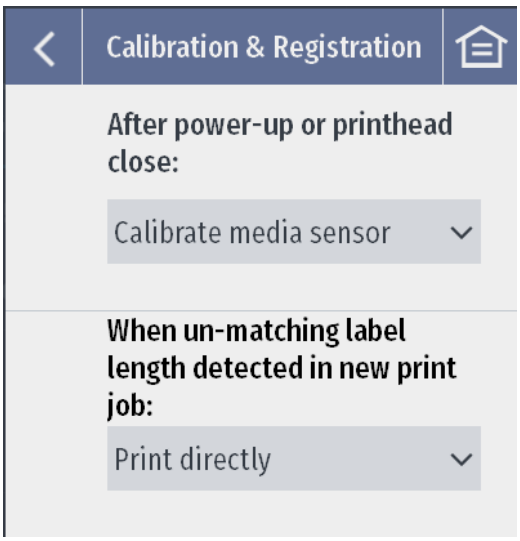


Figure 3-7 Calibration & Registration Menu

**After power-up or printhead close**: Set the printer's next action when the printer is powered on or the printhead is closed.
***Accepted values***: *No Action, Calibrate media sensor, Feed to next label*
***Default value***: *Calibrate media sensor*

**When un-matching label length detected in new print job**: Set the printer's action when the label length in a newly received print job does not match the current label length.
***Accepted values***: *Print after calibration, Print directly*
***Default value***: *Print directly*

### 3.2.1.6 Print Direction

On the LCD touchscreen, select "Settings" > "General" > "Print Direction" to enter the Print Direction menu, as shown in Figure 3-8.

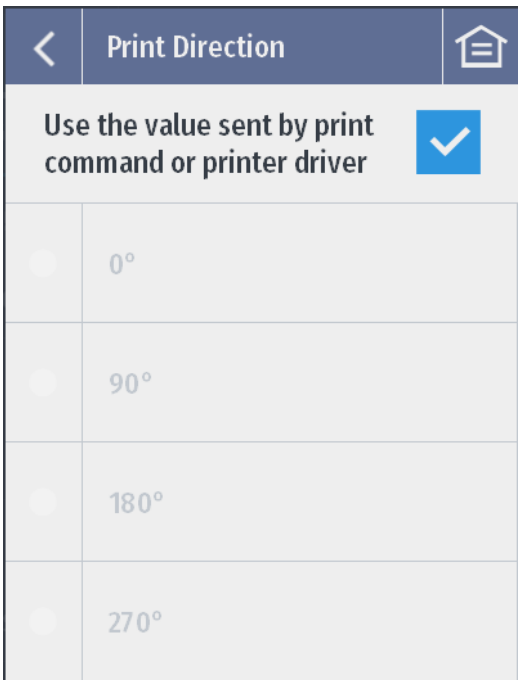


Figure 3-8 Print Direction Menu

Set the print direction of the label content. The print direction defaults to the value sent by print command or printer driver, if you want to use the menu settings, please uncheck the box "Use the value sent by print command or print driver".

***Accepted values***: *0°, 90°, 180°, 270°*

***Default value***: *0°*

### 3.2.1.7 Printed Label Handling

On the LCD touchscreen, select "Settings" > "General" > "Printed Label Handling" to enter the Printed Label Handling menu, as shown in Figure 3-9.

Figure 3-9 Printed Label Handling Menu

Set the printed label handling mode from this menu.
***Accepted values***: *Standard mode, Tear-off mode, Cutter mode*
***Default value***: *Tear-off mode*

The Tear-off Mode menu, as shown in Figure 3-10.

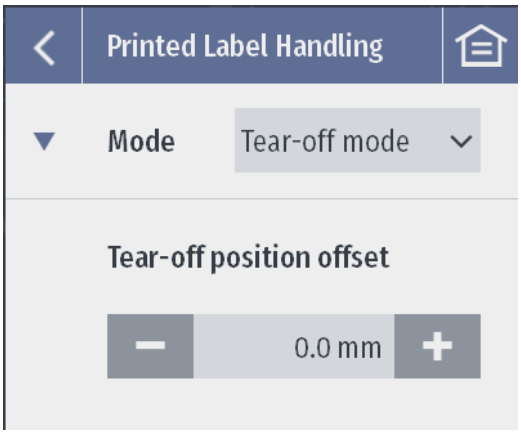


Figure 3-10 Tear-off Mode Menu

**Tear-off position offset**: Adjust the relative position between the label's tear-off line and the tear-off bar of the printer when the label is being teared off.
Increase the value of this parameter will move the tear-off line in the same direction as the media feeding direction, as shown in Figure 3-11.

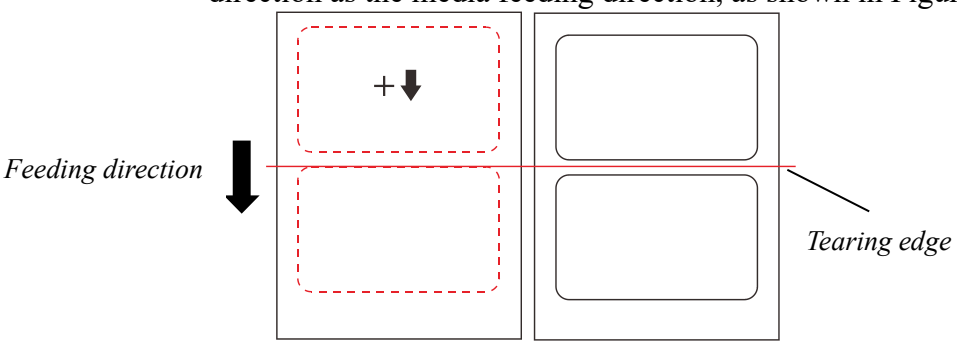


Figure 3-11 Increase Tear-off Position Offset Diagram

Decrease the value will move the tear-off line in the opposite direction of media feeding, as shown in Figure 3-12.

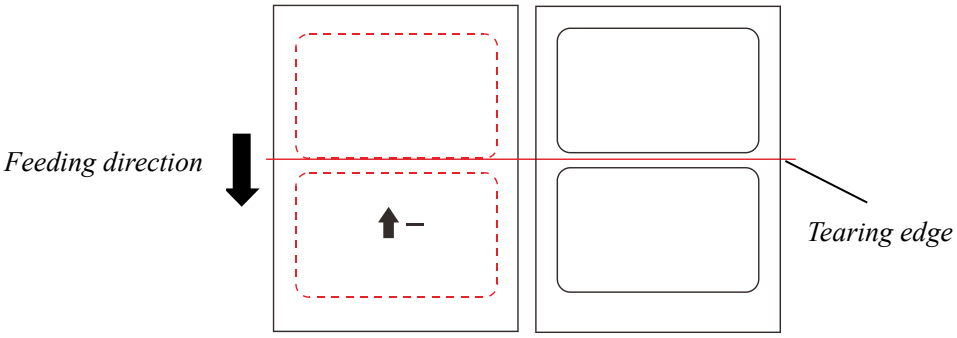


Figure 3-12 Decrease Tear-off Position Offset Diagram

***Value range***: *-1249.8 to 1249.8 mm (for 203dpi models)*
*-847.3 to 847.3 mm (for 300dpi models)*
*-423.6 to 423.6 mm (for 600dpi models)*

The Cutter Mode menu, as shown in Figure 3-13.

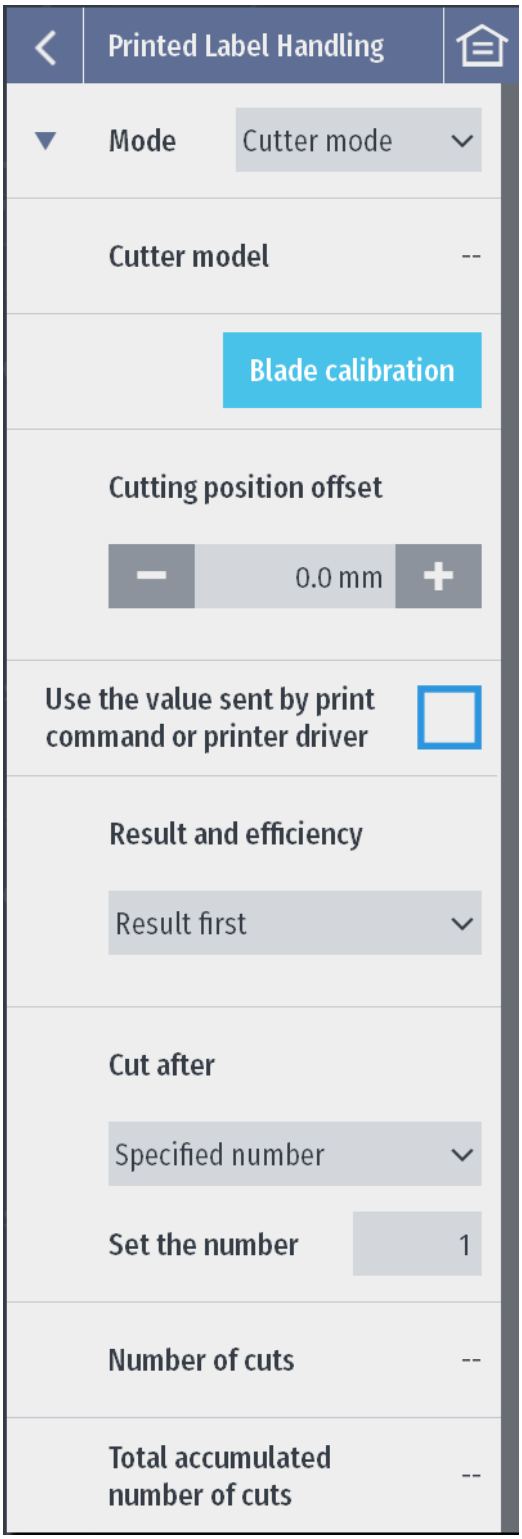


Figure 3-13 Cutter Mode Menu

**Cutter model**: Display the cutter model.

**Blade calibration**: Press "Blade calibration" to calibrate the stop position of the blade by performing a test cut.

**Cutting position offset**: Adjust the relative position between the label's cutting line and the cutter when the label is being cut.
Increase the value of this parameter will move the cutting line in the same direction as the media feeding direction, as shown in Figure 3-14.

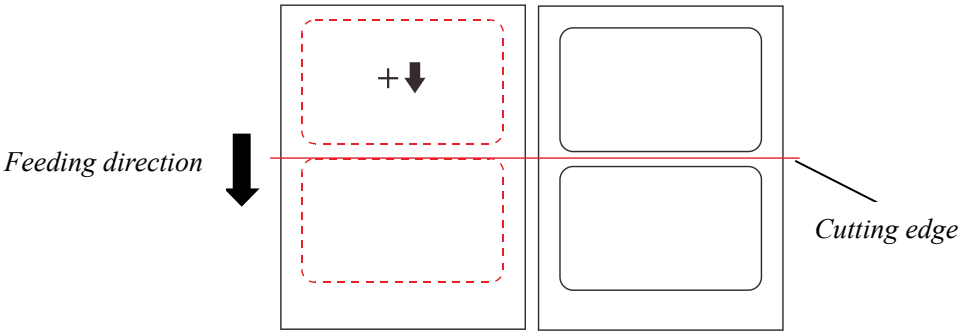


Figure 3-14 Increase Cutting Position Offset Diagram

Decrease the value will move the cutting line in the opposite direction of media feeding, as shown in Figure 3-15.

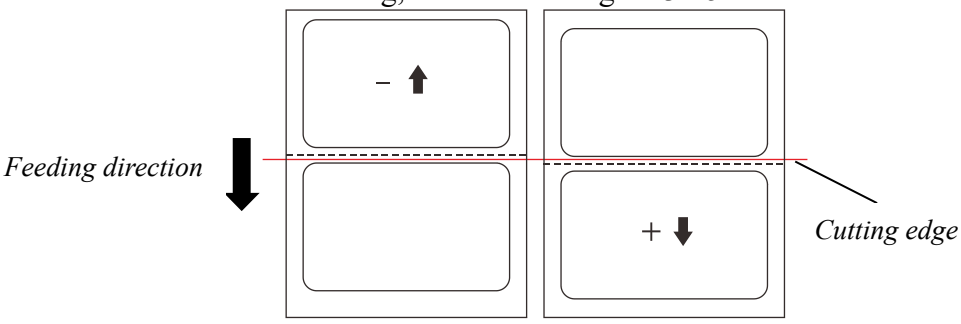


Figure 3-15 Decrease Cutting Position Offset Diagram

***Value range***: *-1249.8 to 1249.8 mm (for 203dpi models)*
*-847.3 to 847.3 mm (for 300dpi models)*
*-423.6 to 423.6 mm (for 600dpi models)*

**Result and efficiency**: Select the cutting preference.
***Accepted values***: *Result first, Balanced, Efficiency First*
***Result first*** - *Keep feeding without printing the next label, stop when reaches the cutting position, and then complete cutting. Back feed to print position and print the next label.*
***Balanced (Balanced Efficiency and Effectiveness)*** - *Continues to print the following labels, pause printing when reaches the cutting position, and then complete cutting. Resume the printing job.*
***Efficiency First*** - *Continues to print the following labels, starts cutting when reaches the cutting position without pausing print job. That means the cutting is completed while printing is in progress. (Note: Efficiency First is only applicable for A400 Pro cutters. In this case, the printing speed and paper width will affect the straightness of the media's cut edge, so please try cutting to confirm if the result is acceptable before selecting.)*
***Default value***: *Result first*

**Cut after**: Set when the cutter performs cutting.
***Accepted values***: *Specified number, Batch print*
***Default value***: *Specified number*

**Set the number**: Set the number of labels to be printed before cutting.
***Accepted values***: *1 to 255*
***Default value***: *1*

**Number of cuts**: Display the number of cuts since the printer was powered on this time.

**Total accumulated number of cuts**: Display the total number of cuts the cutter has been used to cut

labels.

***Note: If "Use the value sent by print command or print driver" is checked, you cannot set the cutting parameters from the settings menu.***

## 3.2.2 Communication

### 3.2.2.1 Serial Port

On the LCD touchscreen, select "Settings" > "Communication" > "Serial Port" to enter the Serial Port menu, as shown in Figure 3-16.

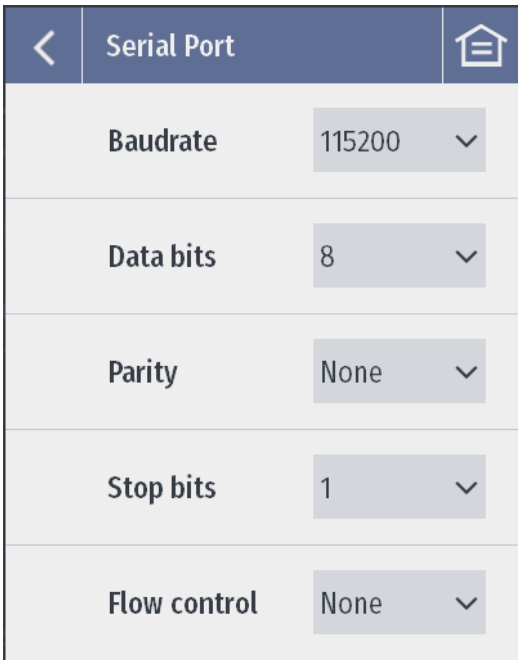


Figure 3-16 Serial Port Menu

Set the parameters of the serial port.

**Baud rate**: Set the baud rate of the printer's serial port. You need to select the value that matches the computer host.
***Accepted values***: *1200, 2400, 4800, 9600, 19200, 38400, 57600, 115200*
***Default value***: *115200*

**Data bits**: Set the data bits of the printer. For accurate communication, you need to select the value that matches the computer host.
***Accepted values***: *7, 8*
***Default value***: *8*

**Parity**: Set the parity of the printer. You need to select the value that matches the computer host.
***Accepted values***: *no parity, odd parity, even parity*
***Default value***: *no parity*

**Stop bits**: Set the stop bits of the printer.
***Accepted values***: *1, 2*
***Default value***: *1*

**Flow control**: Set the printer's serial port flow control method.
***Accepted values***: *None, Xon/Xoff, Rts/Cts*
***Default value***: *None*

### 3.2.2.2 Ethernet

On the LCD touchscreen, select "Settings" > "Communication" > "Ethernet" to enter the Ethernet menu, as shown in Figure 3-17.

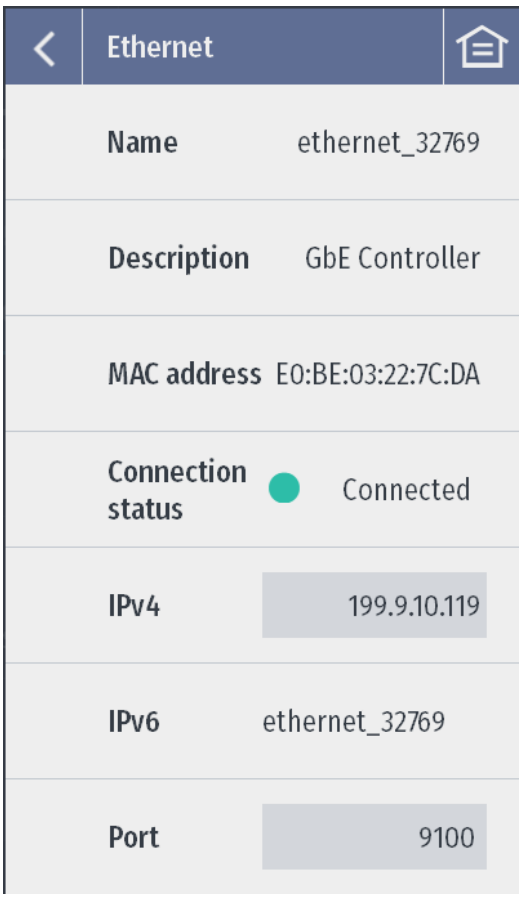


Figure 3-17 Ethernet Menu

Set the network port parameters.
**Name**: Display the name of the NIC.
**Description**: NIC description.
**MAC address**: Display the MAC address of the NIC.
**Connection status**: Display the network connection status.
**IPv4**: Display the IPv4 IP address of the printer. IPv4 settings menu, as shown in Figure 3-18. For a description of the IPv4 setting items, see Table 3-4.

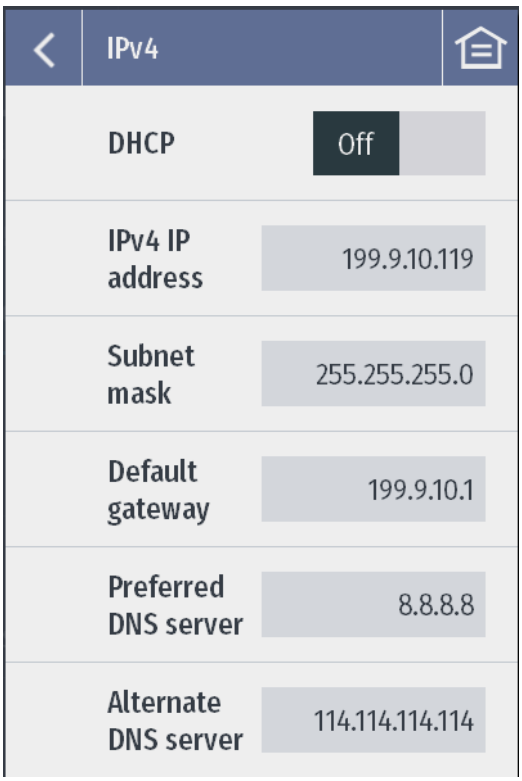


Figure 3-18 IPv4 Settings Menu

Table 3-4 Description of IPv4 Setting Items

| Items | Description |
|---|---|
| DHCP | Set to enable or disable the function of obtaining the printer IP address dynamically. When DHCP is enabled, "IPv4 address", "Subnet Mask" and "Default Gateway" cannot be set manually. |
| IPv4 address | Set the IP address of the printer. (Note: The IP address set here must be in the same network segment as the LAN and cannot be duplicated with the IP addresses of other network devices in the LAN.) |
| Subnet mask | Set the subnet mask. Default value: 255.255.255.0 |
| Default Gateway | Set the default gateway, which must be in the same network segment as the IP address. |
| Preferred DNS Server | Set the DNS server address. |
| Alternate DNS Server | Set the alternate DNS server address. |

**IPv6**: Display the IPv6 address of the printer.
**Port**: Set the network port. Default value: 9100.

## 3.2.3 RFID

### 3.2.3.1 RFID Settings

On the LCD touchscreen, select "Settings" > "RFID" to enable the RFID function, and then select "RFID Settings" to enter the RFID Settings menu, as shown in Figure 3-19.

Figure 3-19 RFID Settings Menu

Set the RFID reader module parameters from this menu.

**Read power**: Set the read power of RFID module.

***Accepted values***: *0.0 to 30.0 dBm*

**Write power**: Set the write power of the RFID module.

***Accepted values***: *0.0 to 30.0 dBm*

**Frequency region**: Select the UHF frequency region.

***Accepted values***: *NA*、*NA2*、*NA3*、*IN*、*JP*、*PRC*、*EU3*、*KR2*、*AU*、*NZ*、*MY*、*ID*、*PH*、*TW*、*MO*、*RU*、*SG*、*VN*、*TH*、*AR*、*HK*、*BD*、*BR*、*OPEN*

The frequency ranges by country/region are listed in Table 3-5.

Table 3-5 Frequency Description

| Frequency Name | Frequency Region | Frequency Range |
|---|---|---|
| NA | North America | 902 ~ 928 |
| NA2 | North America 2 | 917 ~ 928 |
| NA3 | North America 3 | 917 ~ 923 |
| IN | India | 865 ~ 867 |
| JP | Japan | 915 ~ 921 |
| PRC | China | 920 ~ 925 |
| EU3 | Europe 3 | 865 ~ 868 |
| KR2 | South Korea 2 | 917 ~ 921 |
| AU | Australia | 918 ~ 926 |

| Frequency Name | Frequency Region | Frequency Range |
|---|---|---|
| NZ | New Zealand | 922 ~ 928 |
| MY | Malaysia | 919 ~ 923 |
| ID | Indonesia | 923 ~ 925 |
| PH | Philippines | 918 ~ 920 |
| TW | Taiwan, China | 922 ~ 928 |
| MO | Macau, China | 920 ~ 925 |
| RU | Russia | 866 ~ 868 |
| SG | Singapore | 920 ~ 925 |
| VN | Vietnam | 866 ~ 869 |
| TH | Thailand | 920 ~ 925 |
| AR | Argentina | 915 ~ 928 |
| HK | Hong Kong, China | 865 ~ 868 |
| BD | Bangladesh | 925 ~ 926 |
| BR | Brazil | 902 ~ 928 |
| OPEN | Open Band | 865 ~ 928 |

**Protocol type**: Display the protocol type supported by the printer.

**Optimal R/W position**: Set the optimal read/write position of the RFID tag.

***Note: The optimal read/write position of RFID chip is generally the distance from the edge of the tag head to the center of the chip. Manually adjusting the value of the optimal read/write position of RFID chip can correct the inaccuracy value generated by automatic calibration.***

The optimal read/write position diagram, see Figure 3-20.

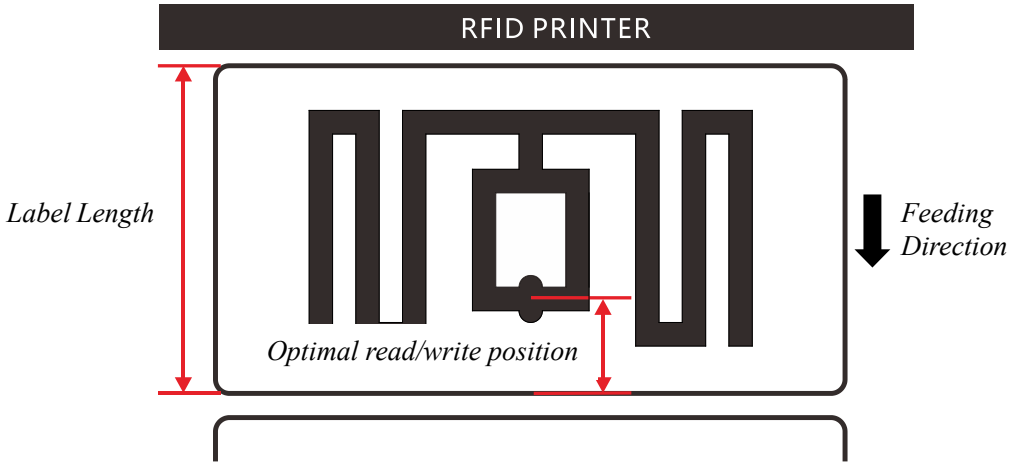


Figure 3-20 Optimal Read/Write Position Diagram

***Accepted values**: 0 ~ 1249.8 mm (for 203dpi models)*
*0 ~ 847.3 mm (for 300dpi models)*
*0 ~ 423.6 mm (for 600dpi models)*

**Max attempts to reprint VOID tag**: Set the maximum number of new RFID tags to retry after the current RFID tag is determined to be invalid (VOID). If any retry is successful, the printer continues to perform the print job; if the RFID encoding still fails after the number of new labels retried reaches the set value, the printer will report an error.

***Accepted values**: 0 to 5*

### 3.2.3.2 Read RFID Tag Data

On the LCD touchscreen, select "Settings" > "RFID" to enable the RFID function, and then select "Read RFID Tag Data" to enter the Read RFID Tag Data menu, as shown in Figure 3-21.

Figure 3-21 Read RFID Tag Data Menu

**Read**: When the printhead is open, press "Read" to continuously read the RFID tag with the strongest read power and display the data on the LCD touchscreen. Continuous reading will automatically quit after 2 minutes, or can be stopped by pressing "Pause" or closing the printhead.

**RESERVED**: Display the inactivation password and access password of RFID tag.

**EPC**: Display the EPC data of the RFID tag.

**TID**: Display the unique identification number of the RFID tag.

**USER**: Display user-defined data.

**RSSI**: Show the signal strength of the RFID tag antenna.

**Next**: When the printhead is closed, press "Next" to feed and read the next RFID tag.

### 3.2.3.3 Calibration

On the LCD touchscreen, select "Settings" > "RFID" to enable the RFID function, and then select "Calibration" to enter the Calibration menu, as shown in Figure 3-22.

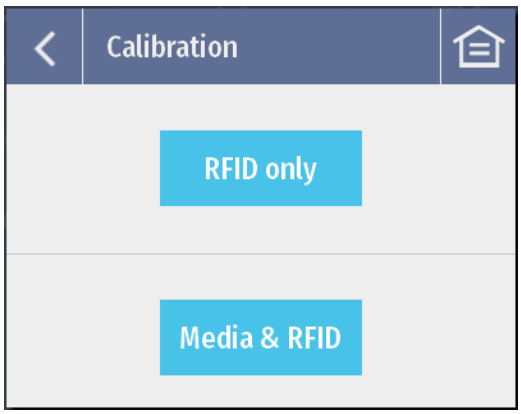


Figure 3-22 Calibration Menu

Perform the RFID calibration to detect the optimal read/write position of the RFID tag.

**RFID only**: Press "RFID only" to directly perform RFID calibration only.

**Media & RFID**: Press "Media & RFID" to calibrate the media sensor first and then perform the RFID calibration.

## 3.2.4 Management

### 3.2.4.1 Preference

On the LCD touchscreen, select "Settings" > "Management" > "Preference" to enter the Preference menu, as shown in Figure 3-23.

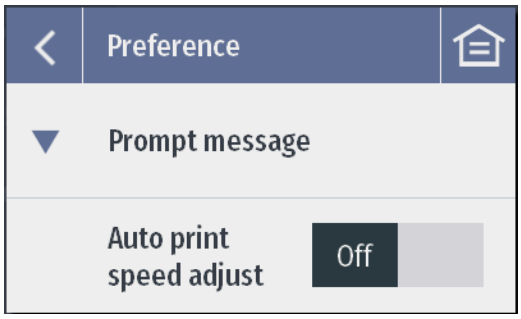


Figure 3-23 Preference Menu

Enable or disable the Automatic Adjustment of the Print Speed prompt message.
***Accepted values***: *On, Off*
***Default value***: *Off*

### 3.2.4.2 Label Formats

On the LCD touchscreen, select "Settings" > "Management" > "Label Formats" to enter the Label Formats menu, as shown in Figure 3-24.

Figure 3-24 Label Formats Menu

Under this menu, up to 100 label format files can be managed. You can select and apply a file in the list, save the current label format, and rename or delete a label format.

## 3.2.5 Advanced

### 3.2.5.1 Label Position Offset

On the LCD touchscreen, select "Settings" > "Advanced" > "Label Position Offset" to enter the Label Position Offset menu, as shown in Figure 3-25.

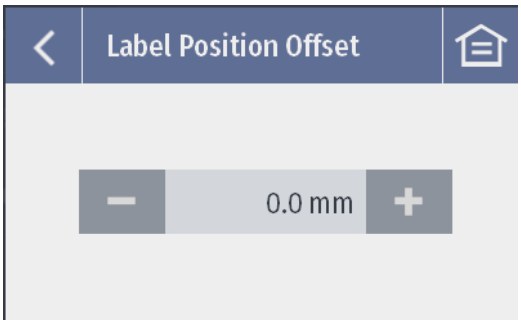


Figure 3-25 Label Position Offset Menu

To compensate for positioning deviations, this parameter can be used to adjust the relative position between the label's leading edge and the heater line of the printhead when the current label is advanced to the starting point.
Increase the value of this parameter will move the leading edge of the label in the same direction as the media feeding direction, as shown in Figure 3-26.

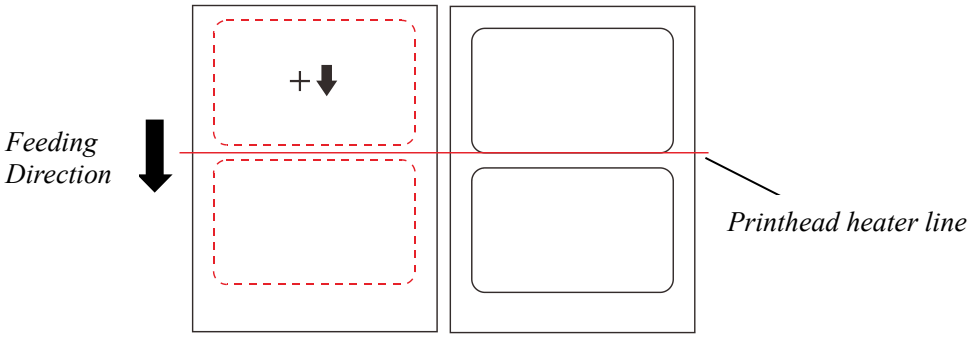


Figure 3-26 Increase Label Position Offset Diagram

Decrease the value will move the leading edge of the label in the opposite direction of media feeding, as shown in Figure 3-27.

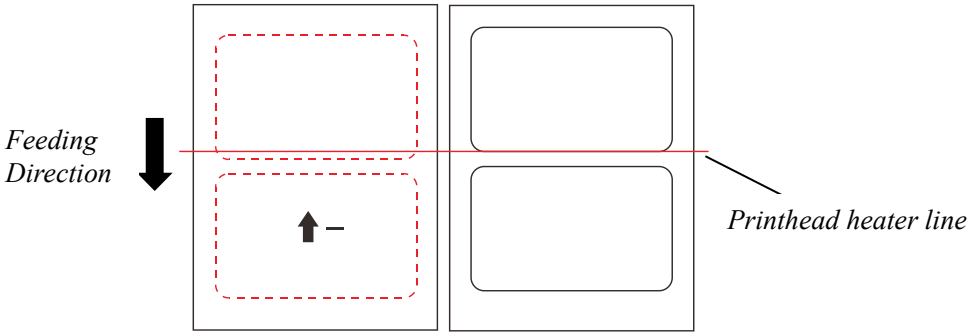


Figure 3-27 Decrease Label Position Offset Diagram

***Accepted values***: *-1249.8 to 1249.8 mm (for 203dpi models)*
*-847.3 to 847.3 mm (for 300dpi models)*
*-423.6 to 423.6 mm (for 600dpi models)*

### 3.2.5.2 Horizontal Offset

On the LCD touchscreen, select "Settings" > "Advanced" > "Horizontal Offset" to enter the Horizontal Offset menu, as shown in Figure 3-28.

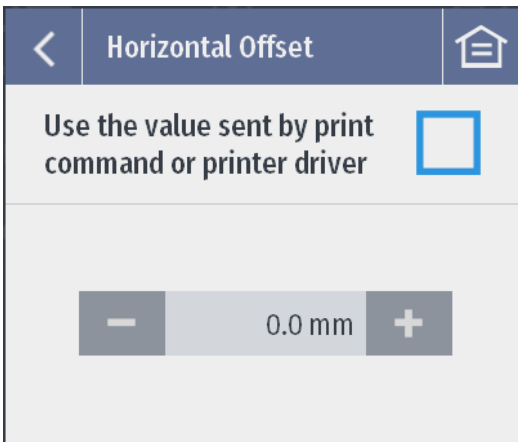


Figure 3-28 Horizontal Offset Menu

This parameter can be used to adjust the horizontal print position on a label. Facing the front side of the printer, increase the value of this parameter to move the print position to the right. Vice versa, the value can be decreased to move the print position to the left. The Horizontal Offset diagram, as shown in Figure 3-29.

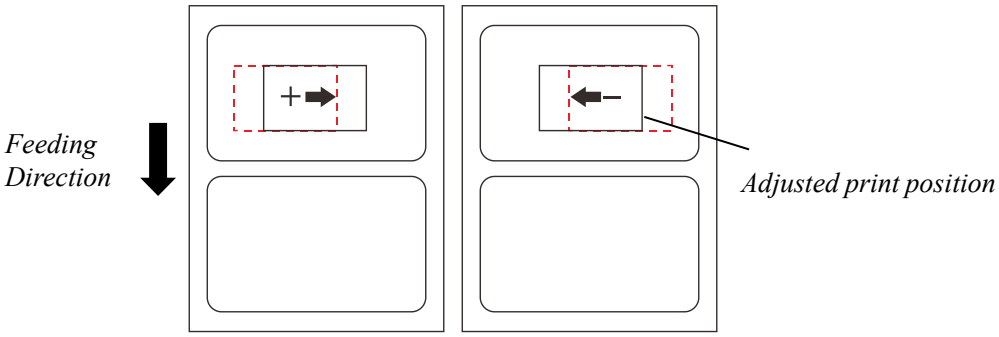


Figure 3-29 Horizontal Offset Diagram

***Accepted values***: *-1249.8 to 1249.8 mm (for 203dpi models)*
*-847.3 to 847.3 mm (for 300dpi models)*
*-423.6 to 423.6 mm (for 600dpi models)*

***Note: If "Use the value sent by print command or printer driver" is checked, you cannot set the horizontal offset from the settings menu.***

### 3.2.5.3 Vertical Offset

On the LCD touchscreen, select "Settings" > "Advanced" > "Vertical Offset" to enter the Vertical Offset menu, as shown in Figure 3-30.

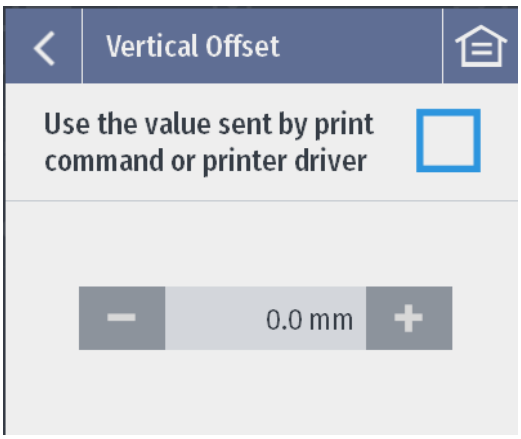


Figure 3-30 Vertical Offset Menu

This parameter can be used to adjust the vertical print position on a label. Increase the value of this parameter to move the print position in the same direction as the media feeding direction. Subsequently, decreasing the value would move the print position in the opposite direction. The Vertical Offset diagram, as shown in Figure 3-31.

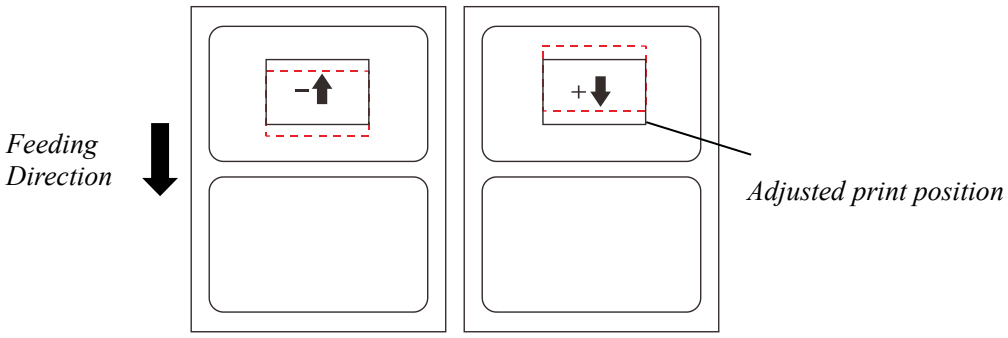


Figure 3-31 Vertical Offset Diagram

***Accepted values***: *-1249.8 ~ 1249.8 mm (for 203dpi models)*
*-847.3 ~ 847.3 mm (for 300dpi models)*
*-423.6 ~ 423.6 mm (for 600dpi models)*

***Note: If "Use the value sent by print command or printer driver" is checked, you cannot set the vertical offset from the settings menu.***

### 3.2.5.4 Registration Accuracy

On the LCD touchscreen, select "Settings" > "Advanced" > "Registration Accuracy" to enter the Registration Accuracy menu, as shown in Figure 3-32.

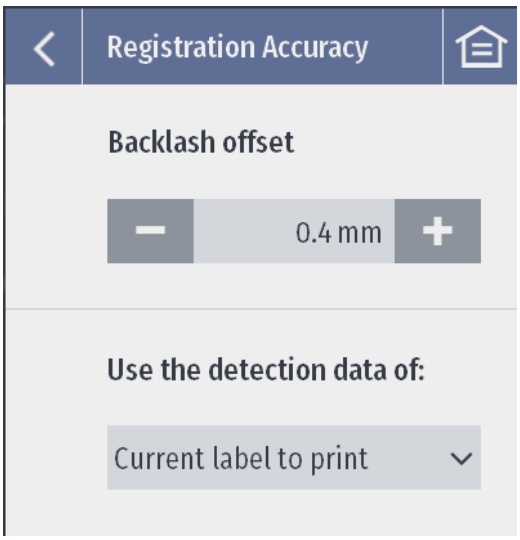


Figure 3-32 Registration Accuracy Menu

Adjust the positioning accuracy of the backfeed label.

**Backlash offset**: This offset is used to correct the backlash when the platen roller has just reversed its feeding direction.

If the print position deviates in the opposite direction of media feeding, as shown in Figure 3-33, please try to increase the Backlash Offset.

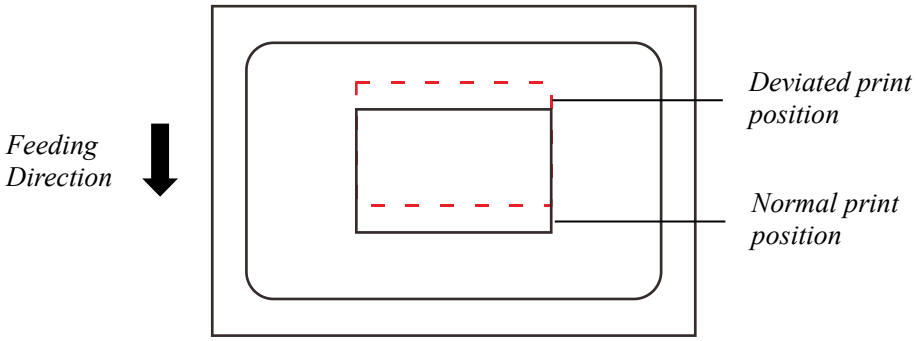


Figure 3-33 Increase Backlash Offset Diagram

If the print position deviates in the direction of media feeding, as shown in Figure 3-34, please try to decrease the Backlash Offset.

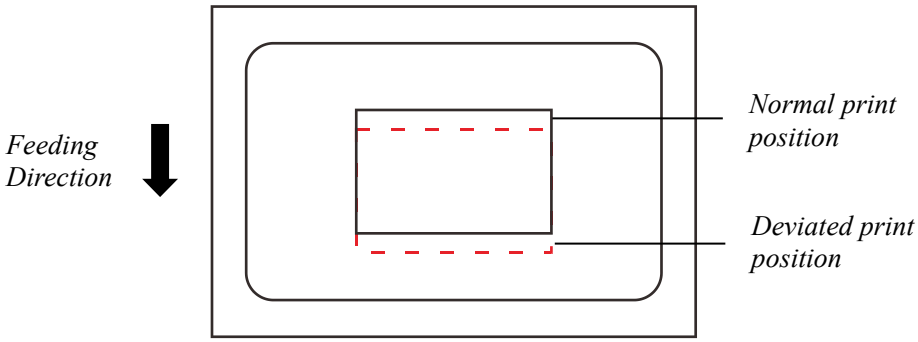


Figure 3-34 Decrease Backlash Offset Diagram

***Accepted values***: *-5.0 to 5.0 mm*
***Default value***: *0.6 mm (for 203dpi models)*
*0.4 mm (for 300dpi models)*
*0.2 mm (for 600dpi models)*

**Use the detection data of**: Set the label positioning to be based on the current label to print or the latest detected label. Normally, there is no need to change the settings. However, if the label stock being used has inconsistent gap sizes due to manufacturing issues, please select "Current label to print" so as to improve the label positioning accuracy.
***Accepted values***: *Current label to print, Latest detected label*
***Default value***: *Latest detected label*

### 3.2.5.5 Sensor Signal Strength

On the LCD touchscreen, select "Settings" > "Advanced" > "Sensor Signal Strength" to enter the Sensor Signal Strength menu, as shown in Figure 3-35.

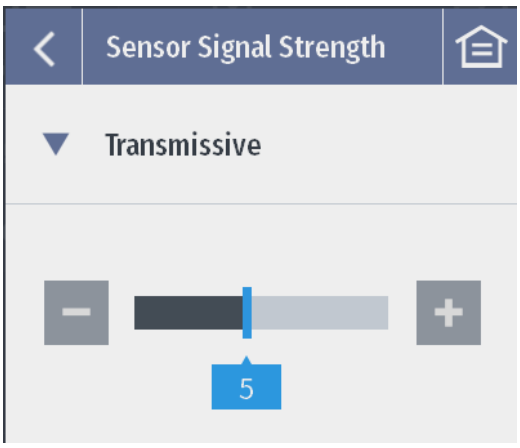


Figure 3-35 Sensor Signal Strength Menu

Set the sensitivity of the media sensor. When the media sensor calibration fails, it is recommended to adjust the sensor signal strength appropriately so as to improve the detection sensitivity.
***Accepted values***: *1 to 10*
***Default range***: *5*

### 3.2.5.6 Reset

On the LCD touchscreen, select "Settings" > "Advanced" > "Reset" to enter the Reset menu, as shown in Figure 3-36.

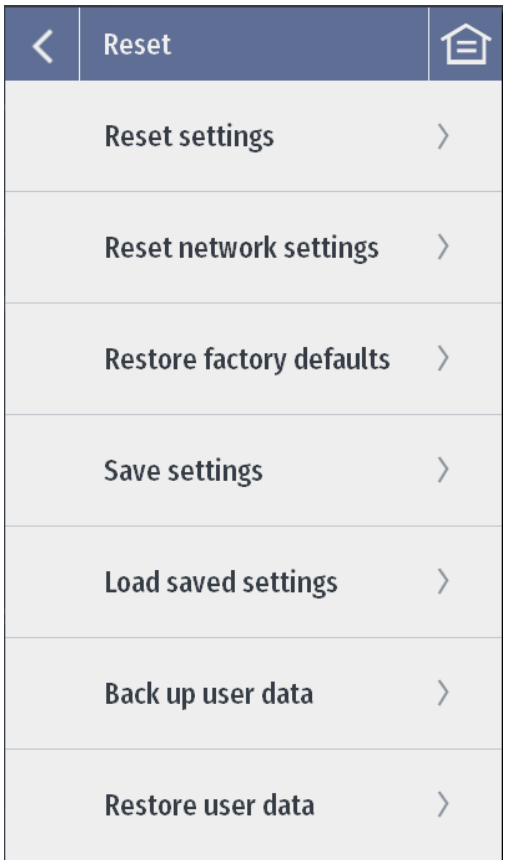


Figure 3-36 Reset Menu

Reset the printer from this menu.

**Reset settings**: The printer will be reset to default settings except the security, language, and account settings. Any customizations you've made to the printer, such as the print speed and print darkness, will be discarded. The user data, such as the downloaded fonts, will not be affected.

**Reset network settings**: This will reset all network settings, including Ethernet, WLAN and Bluetooth.

**Restore factory defaults**: All data will be erased from the printer, including the system and application data, the settings, the downloaded data, and all other user data.

**Save settings**: Save all current settings.

**Load saved settings**: Load saved settings, the current settings will be overwritten.

**Back up user data**: This will back up all data in the printer, including the system and application data, the settings, downloaded files, and other user data.

**Restore user data**: The backed-up user data, if available, will be recovered after the printer being reset to factory default settings.

### 3.2.5.7 Languages

On the LCD touchscreen, select "Settings" > "Advanced" > "Language" to enter the Languages menu, as shown in Figure 3-37.

Figure 3-37 Language Menu

Set the language that the printer displays.

***Accepted values***: *简体中文、English*

### 3.2.5.8 Units

On the LCD touchscreen, select "Settings" > "Advanced" > "Units" to enter the Units menu, as shown in Figure 3-38.

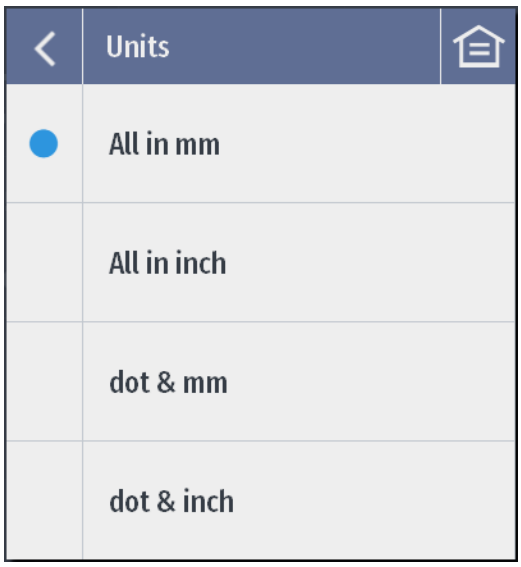


Figure 3-38 Units Menu

Set the units of the setting values.
***Accepted values***: *All in mm, All in inch, dot & mm, dot & inch*

### 3.2.5.9 Date & Time

On the LCD touchscreen, select "Settings" > "Advanced" > "Date & Time" to enter the Date & Time menu, as shown in Figure 3-39.

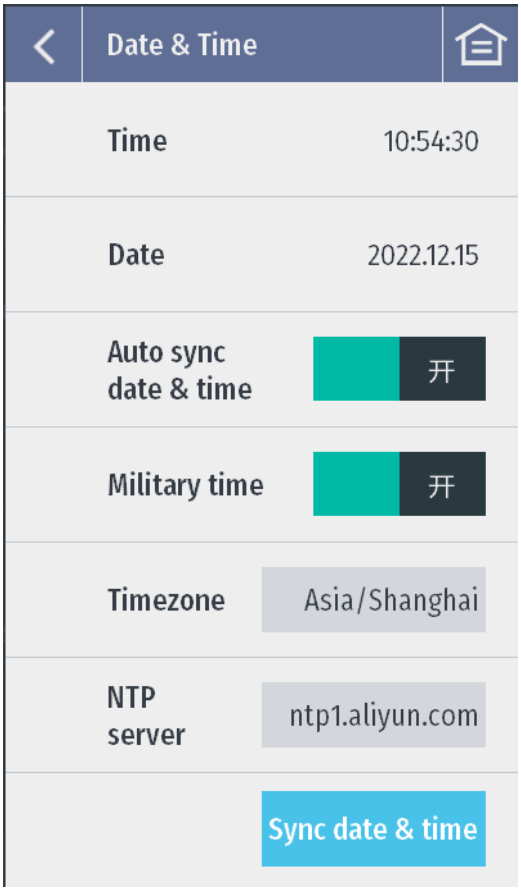


Figure 3-39 Date & Time Menu

Set the date and time displayed on the printer.
**Time**: Display the current time.
**Date**: Display the current date.
**Auto sync date & time**: Set the automatic date and time synchronization function on or off. When this function is on, the NTP server date and time will be automatically synchronized every time the printer is powered on and connected to the internet.
**Military time**: Set the 24-hour system on or off.
**Timezone**: Select the time zone.
**NTP server**: Select the NTP server address.
**Sync date & time**: When the printer is connected to the internet, press "Sync date & time", the system will immediately synchronize the date and time with the NTP server.

### 3.2.5.10 Maximum Feed Length

On the LCD touchscreen, select "Settings" > "Advanced" > "Maximum Feed Length" to enter the Maximum Feed Length menu, as shown in Figure 3-40.

Figure 3-40 Maximum Feed Length Menu

Set the maximum feed length for media sensor calibration. This value needs to be set to more than 2 times of the actual label height.
***Accepted values***: *100.0 to 15000.0 mm*
***Default range***: *1000.0 mm*

### 3.2.5.11 Media Feed Calibration

On the LCD touchscreen, select "Settings" > "Advanced" > "Media Feed Calibration" to enter the Media Feed Calibration menu, as shown in Figure 3-41.

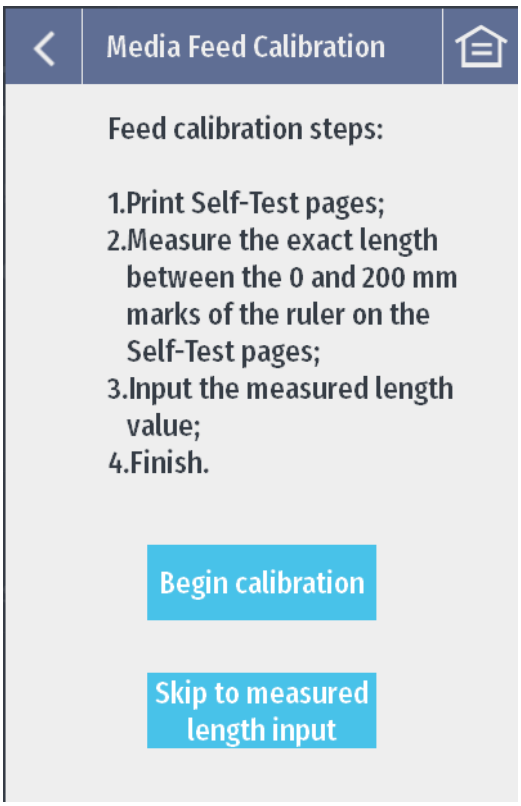


Figure 3-41 Media Feed Calibration Menu

**Begin calibration**: Press "Begin calibration" and follow the steps to complete the calibration process.
**Skip to measured length input**: Press "Skip to measured length input" to skip to Input Measured Length menu.

### 3.2.5.12 Media Roll Diameter

On the LCD touchscreen, select "Settings" > "Advanced" > "Media Roll Diameter" to enter the Media Roll Diameter menu, as shown in Figure 3-42.

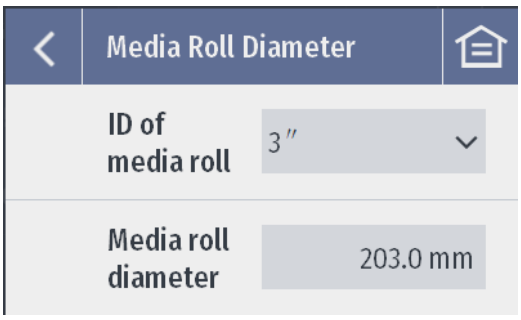


Figure 3-42 Media Roll Diameter Menu

The Remaining Amount of Media Monitoring system detects the real-time variation in diameter of the media roll when printing. By taking both the real-time diameter and the full roll diameter of the media roll into calculation, the system can determine how much media remains on a media roll. The default inner diameter is 3"(76.2 mm). The default value of the diameter of the full media roll is 8"(203.0 mm). If the inner diameter and the full media roll's real diameter are different from the default values, please modify them under this menu.

The real-time remaining media percentage will be displayed on the LCD screen. When the real-time diameter of the media roll equals or is greater than the diameter value as defaulted or modified in the system, the remaining media will be displayed as 100% on the LCD screen.

**Inside of paper roll**: The inner diameter of the media roll. (*Note: The printer is equipped with both 1.5" and 3" media core adapters. The 1.5" core adapter is located inside the 3" core adapter. To load a 1.5" core media roll, please first remove the 3" core adapter; and then adjust the position of the Media Roll Guide Stopper.*)

***Accepted values**: 1.5", 3"*

***Default value**: 3"*

**Media roll diameter**: The full roll diameter of the media roll.

***Accepted values**: 76.2 to 203.2 mm*

***Default value**:203.0 mm*

### 3.2.5.13 Ribbon Outer Diameter

On the LCD touchscreen, select "Settings" > "Advanced" > "Ribbon Outer Diameter" to enter the Ribbon Outer Diameter menu, as shown in Figure 3-43.

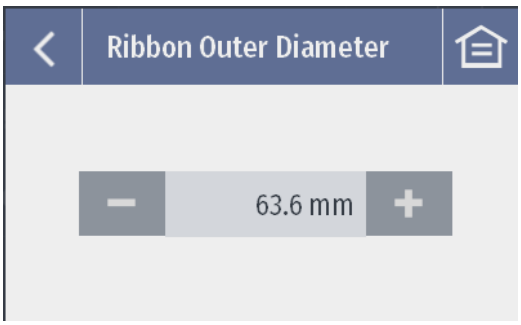


Figure 3-43 Ribbon Outer Diameter Menu

The Remaining Amount of Ribbon Monitoring system detects the real-time variation in diameter of the ribbon roll when printing. By taking both the real-time diameter and the full roll diameter of the ribbon roll into calculation, the system can determine how much ribbon remains on a ribbon roll. The default value of the diameter of the full ribbon roll is 2.5" (63.6 mm). If the full ribbon roll's real diameter is different from the default value, please modify it under this menu.
The real-time remaining ribbon percentage will be displayed on the LCD screen. When the real-time diameter of the ribbon roll equals or is greater than the diameter value as defaulted or modified in the system, the remaining ribbon will be displayed as 100% on the LCD screen.
***Accepted values***: *25.4 to 84.0 mm*
***Default value***: *63.6 mm*

### 3.2.5.14 Programming Language

On the LCD touchscreen, select "Settings" > "Advanced" > "Programming Language" to enter the Programming Language menu, as shown in Figure 3-44.

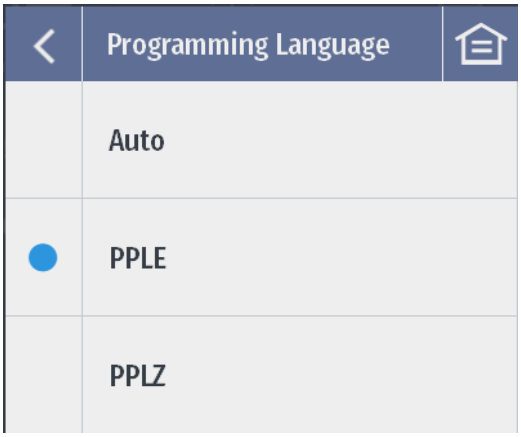


Figure 3-44 Programming Language Menu

Set the programming language of the printer.
***Accepted values***: *Auto, PPLE, PPLZ*
***Default value***: *PPLE*

### 3.2.5.15 Firmware Update

On the LCD touchscreen, select "Settings" > "Advanced" > "Firmware Update" to enter the Firmware Update menu, as shown in Figure 3-45.

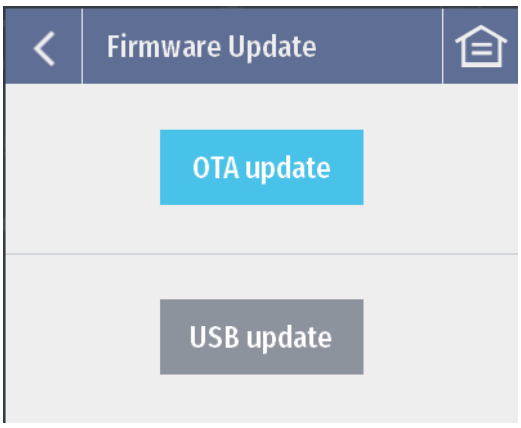


Figure 3-45 Firmware Update Menu

Upgrade the printer firmware.

**OTA update**: Upgrade the printer firmware by downloading the upgrade package from a remote server via the internet.

**USB update**: Upgrade the printer firmware by downloading the upgrade package to the printer via the local USB port.

### 3.2.5.16 Dump Mode

On the LCD touchscreen, select "Settings" > "Advanced" > "Dump Mode" to enter the Dump Mode menu, as shown in Figure 3-46.

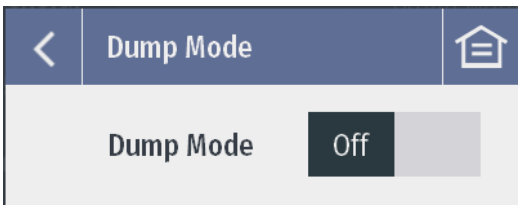


Figure 3-46 Dump Mode Menu

Set the Dump Mode on or off. When the Dump Mode is on, the printer prints out the received data directly without parsing.
***Accepted values***: *On, Off*
***Default value***: *Off*

### 3.2.5.17 Print Test

On the LCD touchscreen, select "Settings" > "Advanced" > "Print Test" to enter the Print Test menu, as shown in Figure 3-47.

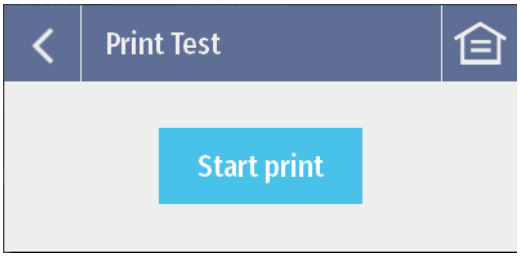


Figure 3-47 Print Test Menu

Press "Start print", the printer will perform print tests by printing a variety of test patterns at print darkness levels of 10, 12, 14, 16, 18, and 20.
The test patterns, as shown in Figure 3-48.

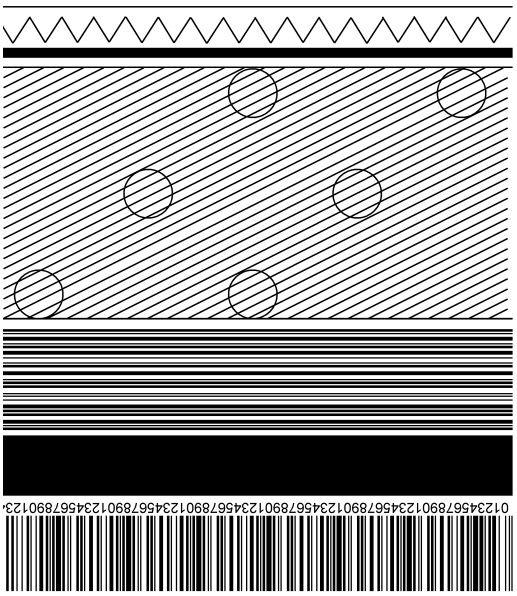

Figure 3-48 Test Patterns

### 3.2.5.18 About

On the LCD touchscreen, select "Settings" > "Advanced" > "About" to enter the About page, as shown in Figure 3-49.

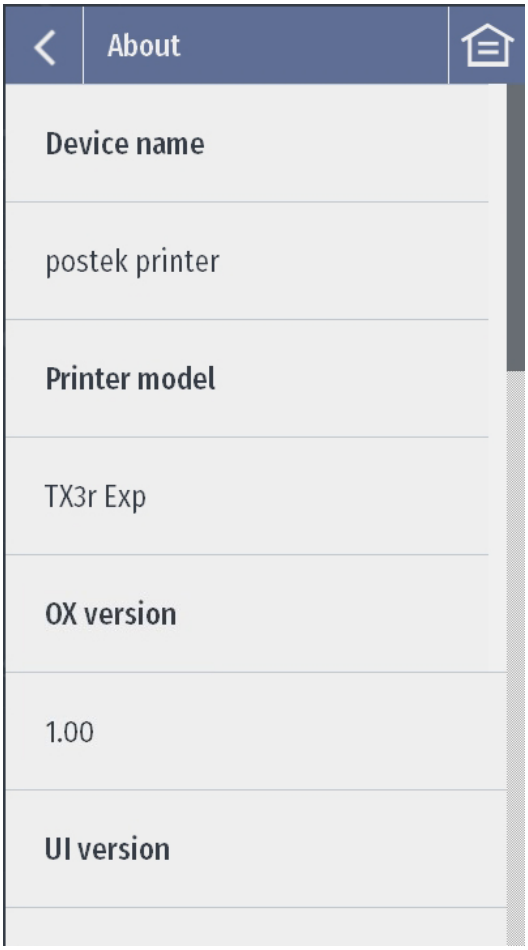


Figure 3-49 About Page

This menu allows you to view the device name, printer model, OX version, UI version, BSP version, OS version, RT version, HEAT version, hardware version, firmware ID and device serial number.

# 3.3 Mechanical Adjustments

## 3.3.1 Adjusting the Media Sensor

The position of the printer's integrated reflective and transmissive media sensor can be adjusted left and right, refer to Figure 3-50, by following the steps below.

1. Loosen the Thumbscrew.
2. Move the thumbscrew and adjust the Media Sensor Assembly to the appropriate position. Make sure that its position is directly over the gap, hole, notch or black mark.
3. Fix the Thumbscrew.

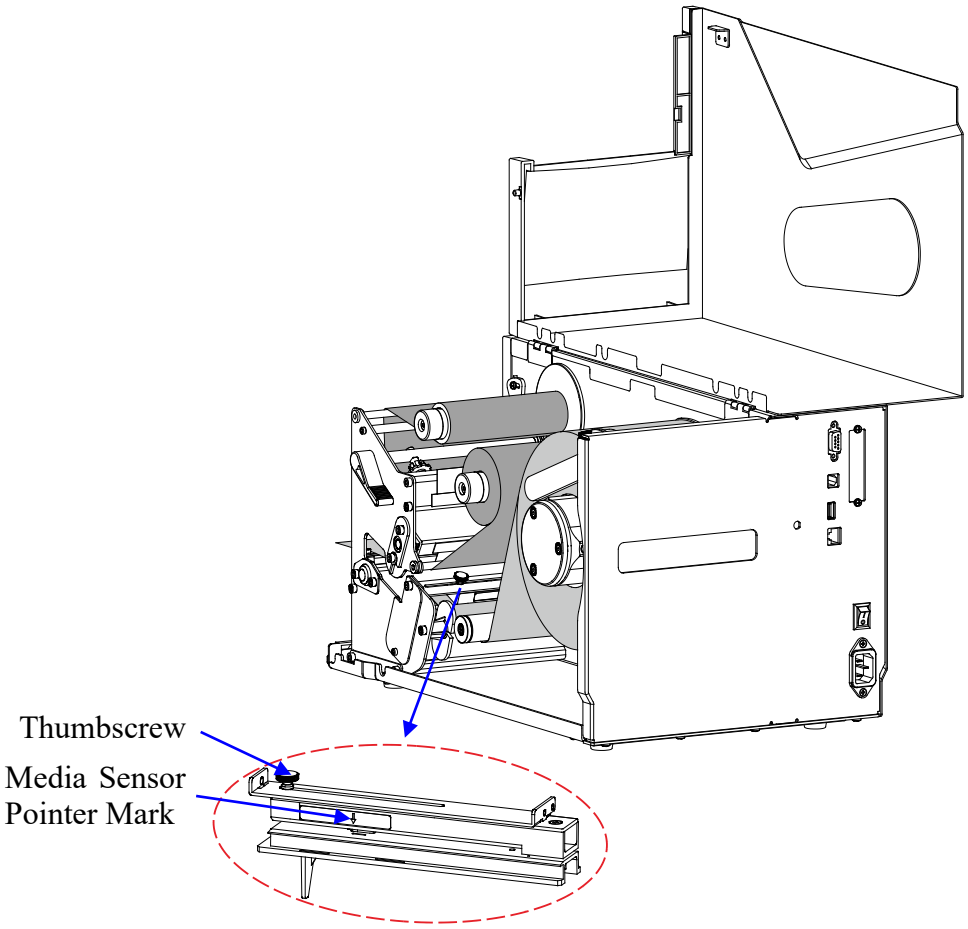


Figure 3-50 Adjust the Media Sensor Position

**NOTE**

- *The printer has three types of media sensors:*
  - *Transmissive sensor, detects gap, hole or notch between labels;*
  - *Lower reflective sensor, detects black mark on the backside of the media;*
  - *Upper reflective sensor, detects black mark on the front side of the media.*

  *The way to set the sensor type can be found in 3.2.1.3 Sensor type.*
- *When roll media is produced, the media end would be fixed on the media core with duct tape or scotch tape. If your printer cannot detect the Media Out signal well, please refer to Figure 3-51 to check the position of the tape.*

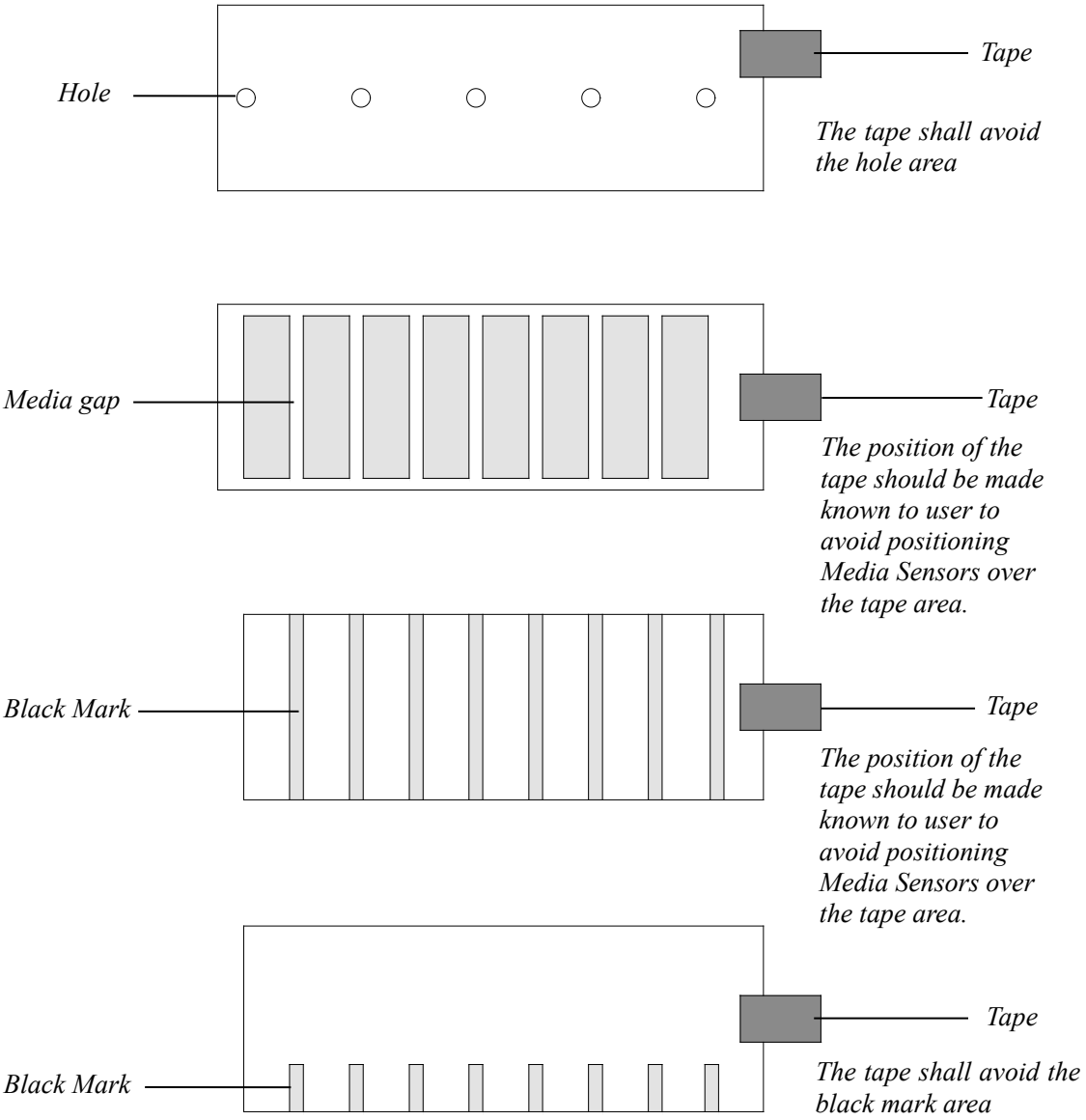


Figure 3-51 End-fixing Tape Position

## 3.3.2 Adjusting the Printhead Pressure and Balance

**CAUTION**

*A qualified technician is required to adjust the printhead pressure or printhead balance. Printhead damage or poor printout quality may occur if the procedure is not done correctly.*

The printhead pressure comes from two spring assemblies, the force generated by the two springs is transferred to the printhead via two Pressure Bars, as shown in Figure 3-52.

Adjusting the position of a Pressure Bar changes the pressure across the printhead and platen roller, thus it has immediate impact on the evenness of printout.

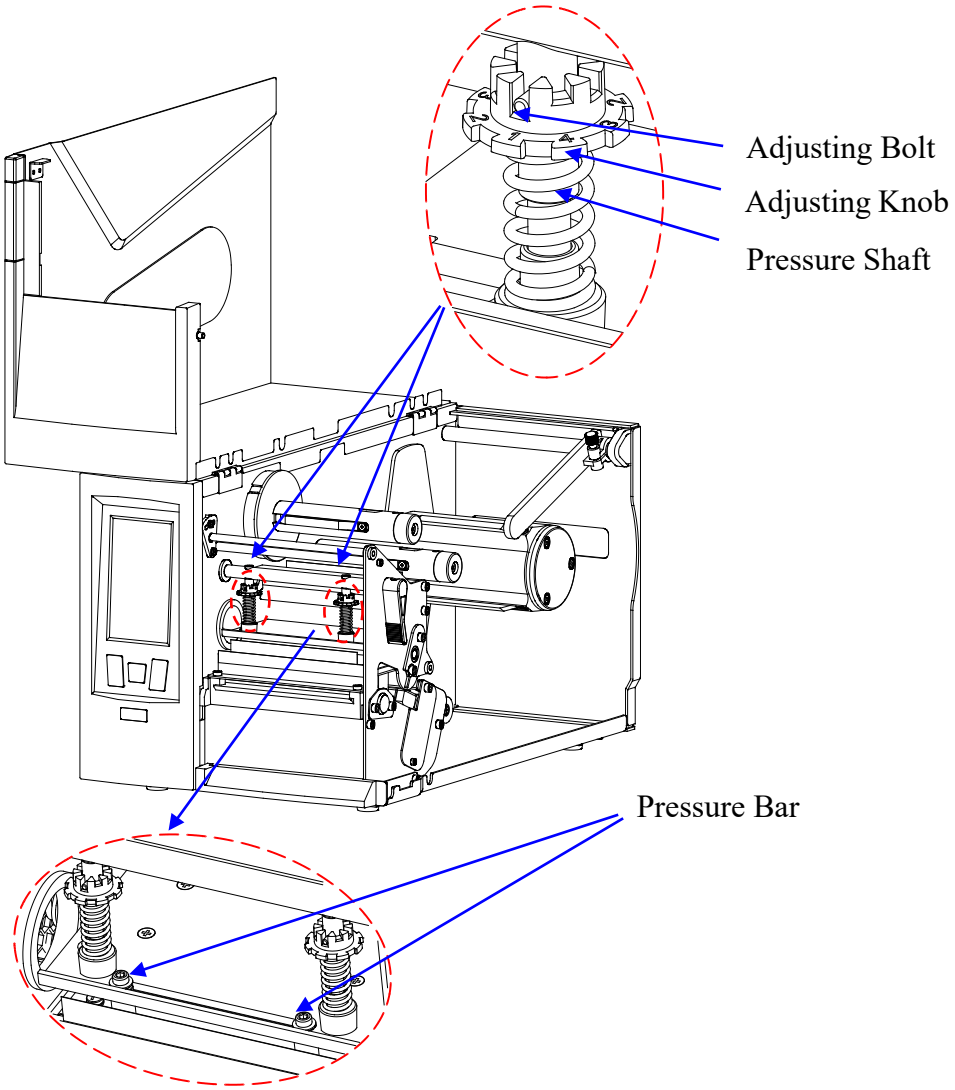


Figure 3-52 Printhead Pressure and Balance Adjustment

Follow the steps below to adjust the printhead pressure:

1. Press down the Adjusting Knob, and twist the Adjusting Knob to align the numbered pressure level with the Adjusting Bolt to apply different level of pressure (The bigger the number, the more pressure the spring assembly brings to the printhead).
2. Repeat step 1 on another spring assembly to complete the adjustment of the printhead pressure.

Follow the steps below to adjust the printhead balance:

1. To adjust the balance of the printhead, only one Pressure Bar's position needs to be adjusted. Moving the Pressure Bar to the left increases the left side pressure of the printhead; moving the Pressure Bar to the right increases the right side pressure of the printhead. Always place one Pressure Bar at end position when making adjustments. Choose the left side or right side Pressure Bar to adjust, then slightly loosen the Pressure Bar by using the Allen wrench bundled with the printer.
2. Slide the Pressure Bar to an estimated position and fasten it with the Allen wrench.
3. Test print to check the evenness of the printout quality.
4. Repeat steps 2 and 3 until even printout is achieved.

## 3.3.3 Adjusting the Ribbon Tension

Tension on both ribbon supply and ribbon take-up spindles can be adjusted, refer to Figure 3-53, by following the steps below.

1. Slightly loosen the Setscrew with the Allen wrench bundled with the printer.
2. To increase the tension, turn the Tension Adjustment Screw clockwise by the Allen wrench; to decrease the tension, turn it counterclockwise. The tension level can be read from the Tension Level Indicator. When tension is set at the desired level, fasten the Setscrew to complete the adjustment.

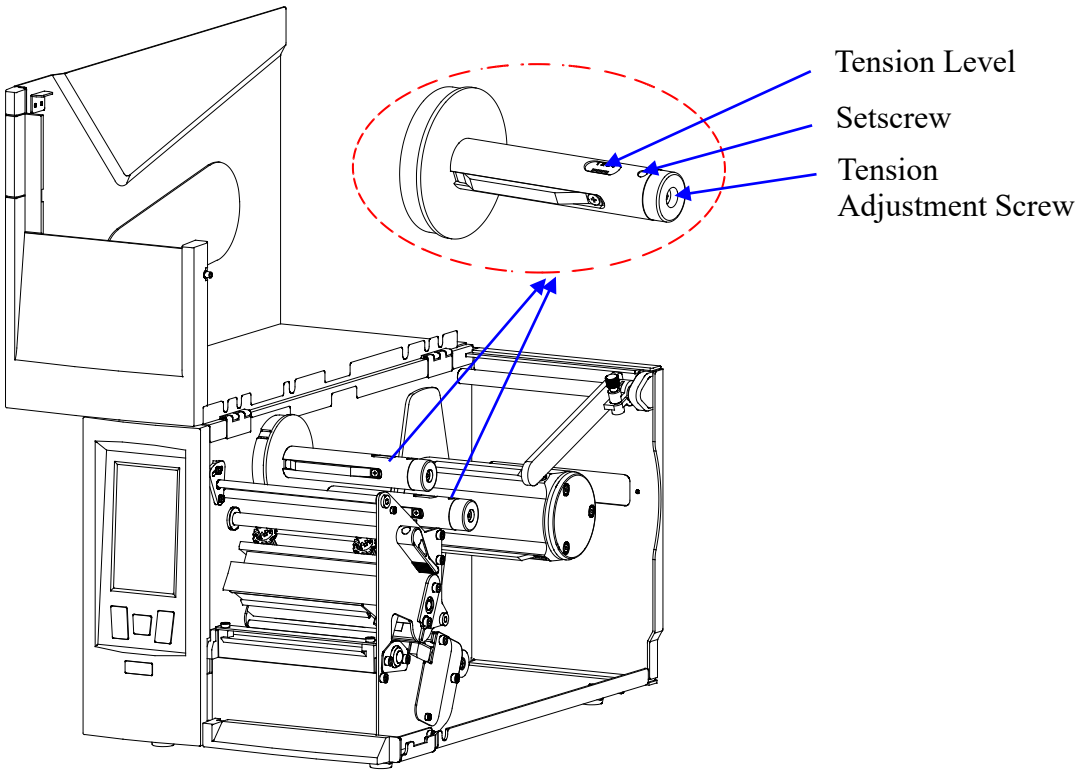


Figure 3-53 Ribbon Tension Adjustment

# Chapter 4: Maintenance

**WARNING**

- *Make sure the printer is powered off before performing maintenance operations.*
- *The Printhead may be hot due to recent printing. Wait until the Printhead cools before performing maintenance.*
- *Use only anhydrous isopropyl alcohol to clean the print head.*

## 4.1 Cleaning the Printhead

Due to the Printhead's functionality in the printer, it comes into contact with consumables and therefore is susceptible to dirt accumulation. If dirt is not removed, the Printhead may be damaged. To ensure longevity of the Printhead, follow the recommended maintenance guidelines below:

Clean the Printhead after every (1) roll of ribbon use or every (3) rolls of label media use. To clean the Printhead:

1. Turn off the printer.
2. Lift to open the right cover of the printer.
3. Turn the Lever counter clockwise to open the Printhead.
4. Remove the ribbon (if applicable) and media.
5. Use a cotton swab dipped in anhydrous isopropyl alcohol. Wipe the Printhead from end to end.
6. Allow a few seconds for the Printhead to dry before using the printer again.

## 4.2 Cleaning the Platen Roller

The roller can accumulate debris from consumables, such as dirt, sand, dust or glue. To ensure longevity of the Platen Roller, follow the recommended maintenance guidelines below:

Clean the Platen Roller after every (3) rolls of label media used. To clean the Platen Roller:

1. Turn off the printer.
2. Lift to open the right cover of the printer.
3. Turn the Lever counter clockwise to open the Printhead.
4. Remove the ribbon (if applicable) and media.
5. Use a cotton swab dipped in anhydrous isopropyl alcohol. Rub the swab along the Platen Roller from end to end while rotating the roller until the swab no longer accumulates ink or debris.

## 4.3 Cleaning the Printer Interior

Over time, the printer's interior may collect dust or debris from the consumables. It is advised to periodically clean the printer's interior in order to prevent the accumulated dirt from damaging internal parts.

To clean the printer interior, use a cotton swabs dipped into anhydrous isopropyl alcohol and remove any dirt.

## 4.4 Cleaning the Sensors

Over time, dust and debris will accumulate over the sensors and affect their performance, to ensure proper detection, please clean the sensors with cotton swabs dipped into anhydrous isopropyl alcohol periodically.

# Chapter 5: Troubleshooting

Occasionally situations occur that require some troubleshooting. Possible issues and potential solutions are listed in this section. While not every situation is addressed, you may find some of these tips useful.

## 5.1 Error Messages

The LCD touchscreen displays messages when there is an error. See Table 5-1 for error messages, the possible causes, and the recommended solutions.

Table 5-1 Error Messages

| Error Message | Possible Cause | Recommended Solution |
|---|---|---|
| Memory error. Error code:1 | / | Please restart the printer. If error remains, please contact a qualified professional for service. |
| System error. Error code:2 | / | Please restart the printer. If error remains, please contact a qualified professional for service. |
| Upgrade failed. Error code:3 | / | Try again |
| System error. Error code:4 | / | Please restart the printer. If error remains, please contact a qualified professional for service. |
| System error. Error code:5 | / | Please restart the printer. If error remains, please contact a qualified professional for service. |
| System error. Error code:6 | / | Please restart the printer. If error remains, please contact a qualified professional for service. |
| System error. Error code:7 | / | Please restart the printer. If error remains, please contact a qualified professional for service. |
| System error. Error code:8 | / | Please restart the printer. If error remains, please contact a qualified professional for service. |
| Transmissive sensor failure. Error code:9 | Incorrect signal strength setting | Go to "Settings" > "Advanced" > "Sensor Signal Strength" to adjust the signal strength. |
| | The sensor module is not installed or broken. | / |
| Lower reflective sensor failure. Error code:10 | Incorrect signal strength setting | Go to "Settings" > "Advanced" > "Sensor Signal Strength" to adjust the signal strength. |
| | The sensor module is not installed or broken. | / |
| Upper reflective | Incorrect signal strength | Go to "Settings" > "Advanced" > "Sensor |

| Error Message | Possible Cause | Recommended Solution |
|---|---|---|
| sensor failure. Error code:11 | setting | Signal Strength″ to adjust the signal strength. |
| | The sensor module is not installed or broken. | / |
| Failed to enable cutter mode. Error code:13 | Cutter mode not supported with this printer | / |
| | Cutter module not installed | / |
| | Cutter module broken | / |
| Updates failed. Error code:100 | Not enough Flash memory. | Please go to ″Settings″ > ″Mgmt″ to clean up some files such as images or fonts to free up space. |
| Updates failed. Error code:101 | High memory usage by other applications. | Please restart the printer and try again. |
| Updates failed. Error code:102 | Invalid update file. | Please check your download source. |
| Updates failed. Error code:103 | Data verification error. | Please try again. |
| Updates failed. Error code:104 | Failed writing Flash memory. | Please contact a qualified professional for service. |
| Updates failed. Error code:105 | Failed connecting to internet. | Please check network connection. |
| Updates failed. Error code:106 | Execution error. | Please try again. |
| Data error. Error code:10001 | / | There is an error when receiving data, Please restart the printer. |
| Data error. Error code:10002 | / | There is an error when sending data, Please restart the printer. |
| Serial port error. Error code:11000 | / | Please restart the printer. If error remains, please contact a qualified professional for service. |
| Serial port error. Error code:11001 | / | Please restart the printer. If error remains, please contact a qualified professional for service. |
| Serial port error. Error code:11002 | / | Please restart the printer. If error remains, please contact a qualified professional for service. |
| Serial port error. Error code:11003 | / | Please restart the printer. If error remains, please contact a qualified professional for service. |
| Serial port error. Error code:11004 | / | Please restart the printer. If error remains, please contact a qualified professional for service. |
| Serial port error. Error code:11005 | / | Please restart the printer. If error remains, please contact a qualified professional for service. |
| Serial port error. Error code:11006 | / | Please restart the printer. If error remains, please contact a qualified professional for service. |
| Serial port error. Error code:11007 | / | Please restart the printer. If error remains, please contact a qualified professional for |

| Error Message | Possible Cause | Recommended Solution |
|---|---|---|
| | | service. |
| USB Device port error. Error code:12000 | / | Please restart the printer. If error remains, please contact a qualified professional for service. |
| USB Device port error. Error code:12001 | / | Please restart the printer. If error remains, please contact a qualified professional for service. |
| USB failed to send data. Error code:12002 | / | Please check the USB connection. If error remains, please contact a qualified professional for service. |
| USB read error. Error code:12003 | / | Please check the USB connection. If error remains, please contact a qualified professional for service. |
| Ethernet port error. Error code:12500 | / | Please restart the printer. If error remains, please contact a qualified professional for service. |
| Ethernet port error. Error code:12501 | / | Please restart the printer. If error remains, please contact a qualified professional for service. |
| Ethernet port error. Error code:12502 | / | Please restart the printer. If error remains, please contact a qualified professional for service. |
| Ethernet port error. Error code:12503 | / | Please restart the printer. If error remains, please contact a qualified professional for service. |
| Ethernet port error. Error code:12504 | / | Please restart the printer. If error remains, please contact a qualified professional for service. |
| Ethernet port error. Error code:12505 | / | Please restart the printer. If error remains, please contact a qualified professional for service. |
| Invalid command. Error code:20000 | Instructions sent to the printer contain an invalid command | Please check the command syntaxes. |
| | The configured printer programming language doesn't match that in the instructions sent to the printer | Please go to "Settings" > "Advanced"> "Programming Language" to select the matching programming language. |
| Invalid command. Error code:20001 | Instructions sent to the printer contain an invalid command | Please check the command syntaxes. |
| | The configured printer programming language doesn't match that in the instructions sent to the printer | Please go to "Settings" > "Advanced"> "Programming Language" to select the matching programming language. |
| Invalid command. Error code:21000 | Instructions sent to the printer contain an invalid command | Please check the command syntaxes. |
| | The configured printer programming language doesn't match that in the instructions sent to the printer | Please go to "Settings" > "Advanced"> "Programming Language" to select the matching programming language. |
| Invalid command. Error code:22000 | Instructions sent to the printer contain an invalid command | Please check the command syntaxes. |

| Error Message | Possible Cause | Recommended Solution |
|---|---|---|
| | The configured printer programming language doesn't match that in the instructions sent to the printer | Please go to "Settings" > "Advanced"> "Programming Language" to select the matching programming language. |
| Keypad error. Error code:23000 | / | Please restart the printer. If error remains, please contact a qualified professional for service. |
| LCD error. Error code:24000 | / | Please restart the printer. If error remains, please contact a qualified professional for service. |
| LCD error. Error code:24001 | / | Please restart the printer. If error remains, please contact a qualified professional for service. |
| System error. Error code:30000 | / | Please restart the printer. If error remains, please contact a qualified professional for service. |
| System error. Error code:30001 | / | Please restart the printer. If error remains, please contact a qualified professional for service. |
| Printhead open. Error code:30002 | / | Please close the printhead |
| Data processing timeout. Error code:30003~30004 | / | Impaired performance of CPU by heat, ambient temperature needs to be well maintained. |
| System error. Error code:30100~30119 | / | Please restart the printer. If error remains, please contact a qualified professional for service. |
| Excessive label size. Error code: 31000 | / | Not enough memory to process label data of this size. |
| Media sensor calibration failed. Error code:31001 | / | Ensure that the media sensor is aligned with the sensing marks, e.g. gaps, holes, black marks. |
| | / | Choose the best media sensor for the situation: transmissive, upper reflective, or lower reflective. |
| | / | The media sensor needs cleaning. |
| | / | Incorrect signal strength setting, go to "Settings" > "Advanced" > "Sensor Signal Strength" to adjust the signal strength. |
| Out of media. Error code: 31002 | / | Replace the media. |
| Media detection error. Error code: 31003 | Media sensor calibration not performed after replacing a new media. | Press and hold the [FEED/Calibration] button (hold for around 4 seconds) to perform Media Sensor Calibration |
| | / | Ensure that the media sensor is aligned with the sensing marks, e.g. gaps, holes, black marks. |
| | / | Choose the best media sensor for the situation: transmissive, upper reflective, or lower reflective. |

| Error Message | Possible Cause | Recommended Solution |
|---|---|---|
| | / | Media sensor needs cleaning. |
| | / | Incorrect signal strength setting, go to "Settings" > "Advanced" > "Sensor Signal Strength" to adjust the signal strength. |
| Ribbon detection error. Error code: 31004 | Ribbon breaks | Reload the ribbon. |
| | Ribbon sensor module failure | / |
| Out of ribbon. Error code: 31005 | / | Replace the ribbon. |
| Media sensing mark misdetected. Error code: 31006 | Misdetection caused by preprinted text or image, RFID inlays, etc., on the label. | Please adjust the media sensor to move away from these positions. If error remains, please contact a qualified professional for service. |
| Out of media. Error code: 31007 | / | Replace the media. |
| Media detection error. Error code: 31008 | Media sensor calibration not performed after replacing a new media. | Press and hold the [FEED/Calibration] button (hold for around 4 seconds) to perform Media Sensor Calibration |
| | / | Ensure that the media sensor is aligned with the sensing marks, e.g. gaps, holes, black marks. |
| | / | Choose the best media sensor for the situation: transmissive, upper reflective, or lower reflective. |
| | / | Media sensor needs cleaning. |
| | / | Incorrect signal strength setting, go to "Settings" > "Advanced" > "Sensor Signal Strength" to adjust the signal strength. |
| Ribbon detection error. Error code: 31009 | Ribbon breaks | Reload the ribbon. |
| | Ribbon sensor module broken | / |
| Out of ribbon. Error code: 31010 | / | Replace the ribbon |
| Printhead open failed. Error code: 31100 | Sensor or motor failure. | Please contact a qualified professional for service. |
| Printhead close failed. Error code: 31101 | Sensor or motor failure. | Please contact a qualified professional for service. |
| System error. Error code: 32000~32025 | / | Please restart the printer. If error remains, please contact a qualified professional for service. |
| Printhead overheated. Error code: 32028 | / | Please decrease print speed or lower the print darkness. |
| Power overload. Error code: 32029 | / | Please decrease print speed or lower the print darkness. If error remains, it's probably a power supply failure. Please contact a qualified professional for service. |
| Low ambient temperature. Error | / | Due to low ambient temperature, the printer needs to print at a lower darkness level in |

| Error Message | Possible Cause | Recommended Solution |
|---|---|---|
| code: 32030 | | order to maintain the currently set print speed. After printing starts, the print darkness may gradually increase to the current setting as the print head temperature rises.<br>Press Continue below to start printing with lowered print darkness.<br>Or you can turn on the "Auto Print Speed Adjust" function by going to "Settings" > "General" > "Speed". The printer will automatically reduce the print speed to ensure the print darkness level when the ambient temperature is low.<br>Go to "Settings" > "Mgmt" > "Preference" to stop this message from showing up again. |
| Cutting failed. Error code: 33021 | Media jammed. | Please clear the jam. |
| Cutting blade not back in place. Error code: 33022 | / | The blade stops at the wrong position, go to ″Settings″ > ″Printed Label Handling″ > ″Mode″ > ″ Cutter mode″, press ″Blade calibration″ to adjust the blade position. |
| RFID module initialization failed. Error code: 40001 | / | Please have a qualified professional check if the RFID module is correctly installed. |
| RFID function closed. Error code: 40002 | / | Please turn on the RFID function from the LCD menu. |
| RFID data send error. Error code: 40003 | / | Please have a qualified professional check if the RFID module is correctly installed. |
| RFID data receive error. Error code: 40004 | / | Please have a qualified professional check if the RFID module is correctly installed. |
| No RFID Tags found. Error code: 40001 | Media with RFID tags is not correctly loaded | / |
| | Damaged RFID tags | / |
| | RFID calibration has not been performed | / |
| | Read power is set too low | Please go to ″Settings″ > ″RFID″ > ″RFID Settings″ to increase the read power. |
| | Loose RFID antenna connection | / |
| Excessive read power. Error code: 40002 | / | Please go to "Settings″ > ″RFID″ > ″RFID Settings″ to lower the read power. |
| RFID unlock failed. Error code: 40003 | Wrong password | Please check the password |
| | Access password is not available in the chipset of the tag | / |

| Error Message | Possible Cause | Recommended Solution |
|---|---|---|
| | Data field to unlock doesn't exist in the chipset of the tag | / |
| | Tag is permanently locked. | / |
| RFID encoding failed. Error code: 40004 | Data length is out of range | / |
| | Wrong password for the locked memory banks | / |
| | Data field to encode doesn't exist in the chipset of the tag. | / |
| Read RFID data failed. Error code: 40005 | Read length is greater than the length of the memory bank | / |
| | Wrong password for locked memory banks | / |
| | Data field to read doesn't exist in the chipset of the tag. | / |
| RFID lock failed. Error code: 40006 | Wrong password for memory banks already locked | / |
| | Data field to lock doesn't exist in the chipset of the tag | / |
| | Tag is permanently unlocked. | / |
| Tag ID verification failed. Error code: 40007 | / | Please replace the RFID tag stock with which meets the designated tag ID specifications |
| RFID calibration failed. No RFID tags detected. Error code: 41008 | Media with RFID tags is not correctly loaded | / |
| | Damaged RFID tags | / |
| | Loose RFID antenna connection | / |
| | Unstable electromagnetic coupling between the printer's RFID antenna and the RFID tag. | Please replace the RFID tag stock |
| RFID calibration failed. RFID tags are too close to each other. Error code: 41009 | / | / |
| Un-matching RFID tags detected. Error code: 41011 | New RFID tag stock loaded without performing RFID Calibration. | Please perform Media & RFID Calibration. |
| System error. Error code: 42001 | / | Please restart the printer. If error remains, please contact a qualified professional for service. |

## 5.2 Miscellaneous Issues

Table 5-2 identifies miscellaneous issues with the printer, the possible causes, and the recommended solutions.

Table 5-2 Miscellaneous Issues

| Problem | Possible Cause | Recommended Solution |
|---|---|---|
| Poor printout quality | Incorrect Darkness setting | Please go to "Settings" > "General" > "Darkness" to set the appropriate darkness. |
| | Media and ribbon are not properly matched | Replace the media and/or the ribbon |
| | Insufficient printhead pressure | Adjust the printhead pressure, refer to 3.3.2 Adjusting the Printhead Pressure and Balance |
| Horizontally displaced print | Media not well guided | Reload the media, refer to 2.2.4 Loading the Media |
| | Unbalanced printhead pressure | Adjust the printhead pressure and balance, refer to 3.3.2 Adjusting the Printhead Pressure and Balance |
| Skipped labels | Media Sensor Calibration not performed | Press and hold the [FEED/Calibration] button (hold for around 4 seconds) to perform Media Sensor Calibration |
| | Incorrect page setup in the computer software | Correct the page setup values in the software |
| | Incorrect media sensor type | Please go to "Settings" > "General" > "Sensor Type" to choose the best media sensor for the situation |
| Print blank pages | Ribbon loaded incorrectly | Reload the ribbon. Refer to 2.2.3 Loading the Ribbon |
| Partial blurry prints | Unbalanced printhead pressure | Adjust the printhead pressure and balance, refer to 3.3.2 Adjusting the Printhead Pressure and Balance |
| Vertical blank lines in print | Dirty printhead | Clean the printhead |
| | Damaged heating elements on the printhead | Replace the printhead, please contact an authorized POSTEK service provider for technical support. |
| Ribbon take-up slack or stopped | Low torque on ribbon take-up spindle | Increase the ribbon take-up tension, refer to 3.3.3 Adjusting the Ribbon Tension |
| Ribbon slides against media | Torque too high on ribbon supply spindle | Reduce the ribbon supply tension, refer to 3.3.3 Adjusting the Ribbon Tension |
| Dirty printouts | Adhesive bleed | Change the media roll |
| Printouts slanted | Label not squarely die cut | Change the media roll |
| | Media not well guided | Reload the media, refer to 2.2.4 Loading the Media |
| Compressed printouts | Print speed too high for the media being used | Please go to "Settings" > "General" > "Speed" to a decrease print speed. |
| Data Sent but Not Printing | The driver is incorrect. | Ensure the correct driver is chosen in the label software. |
| | Memory overflow | Reset the printer. |

**NOTE**

*For errors not listed here, please contact an authorized POSTEK Service Provider for further assistance.*

# Appendix A: Interface Specifications

**The RS232 connector on the printer is a DB9F:**

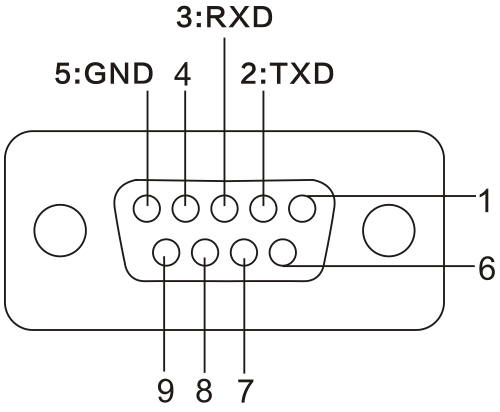


| Number | Description | Definition |
|---|---|---|
| 1 | / | / |
| 2 | Out | TX |
| 3 | In | RX |
| 4 | / | / |
| 5 | - | Ground |
| 6 | / | / |
| 7 | / | / |
| 8 | / | / |
| 9 | / | / |

**Baud rate**: 9600, 19200, 38400, 57600 and 115200
**Data format**: 8 data bits, 1 start bit or 1 stop bit.
**Flow control**: None. If you are using software or drivers under the Windows environment, the flow control must be set to "hardware."

Any communications port can transmit data from the host (RS232, Ethernet, or USB). Preliminary communications settings are not required since the printer will automatically detect which port is active.

**CAUTION**

*Never send data from 2 ports at the same time. Data cannot be sent to more than one port simultaneously or data corruption and print errors may occur.*

# Appendix B: ASCII Table

| | 0 | 1 | 2 | 3 | 4 | 5 | 6 | 7 |
|---|---|---|---|---|---|---|---|---|
| **0** | NUL | | | 0 | @ | P | ` | p |
| **1** | SOH | XON | ! | 1 | A | Q | a | q |
| **2** | STX | | “ | 2 | B | R | b | r |
| **3** | | XOFF | # | 3 | C | S | c | s |
| **4** | | | $ | 4 | D | T | d | t |
| **5** | | NAK | % | 5 | E | U | e | u |
| **6** | ACK | | & | 6 | F | V | f | v |
| **7** | BEL | | ‘ | 7 | G | W | g | w |
| **8** | BS | | ( | 8 | H | X | h | x |
| **9** | | | ) | 9 | I | Y | i | y |
| **A** | LF | | * | : | J | Z | j | z |
| **B** | | ESC | + | ; | K | [ | k | { |
| **C** | FF | | , | < | L | \ | l | \| |
| **D** | CR | | - | = | M | ] | m | } |
| **E** | SO | RS | . | > | N | ^ | n | ~ |
| **F** | SI | US | / | ? | O | _ | o | DEL |
| | **0** | **1** | **2** | **3** | **4** | **5** | **6** | **7** |

**NOTE**

*The € sign is included in the embedded table at DEC128 or HEX 80.*

POSTEK

RUGGED PARTS, DURABLE MACHINES